MODEL AFD-280E
Fry Dispenser

OPERATOR MANUAL
English (Rev. F)
P/N 291510

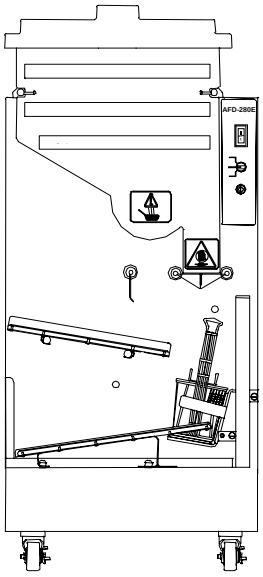

Manufactured by
AUTOMATED EQUIPMENT LLC
5140 Moundview Drive
Red Wing, MN 55066 U.S.A.
PHONE: 1 (651) 385-2273
FAX: 1 (651) 385-2166
SERVICE FAX: 1 (651) 385-2172
FOR SERVICE in the U.S.A./CANADA, CALL:
1 (800) 248-2724

http:// www.autoequipllc.com

Business Hours: 8:00 AM – 5:00 PM CST
After hours, your call will be handled by a pager service;
a Technical Support Representative will return your call.

TABLE OF CONTENTS

INTRODUCTION ____ 3
SPECIFICATIONS ____ 3
FCC STATEMENT ____ 3
WARRANTY ____ 4
REQUESTING SERVICE, ASSISTANCE, OR PARTS ____ 5
SAFETY ____ 6
ASSEMBLING THE DISPENSER ____ 7
DAILY SET-UP ____ 8
DAILY CLOSING ____ 8
OPERATOR CONTROLS ____ 9
FRONT PANEL OPERATIONS CUSTOMIZATION ____ 10
SEQUENCE OF OPERATION ____ 11

Copyright © 2005 Automated Equipment LLC. All Rights Reserved

The information in this manual is subject to change without notice.

IN NO EVENT WILL AUTOMATED EQUIPMENT LLC BE LIABLE FOR TECHNICAL OR EDITORIAL OMISSIONS MADE HEREIN; NOR FOR DIRECT, SPECIAL, INCIDENTAL, OR CONSEQUENTIAL DAMAGES RESULTING FROM THE FURNISHING, PERFORMANCE, OR USE OF THIS MATERIAL.

This manual is copyrighted with all rights reserved. Under the copyright laws, this manual may not be copied, in whole or part, without the written consent of Automated Equipment LLC

Product names mentioned herein are for identification purposes only, and may be trademarks and/or registered trademarks of their respective companies.

INTRODUCTION

The Dispenser is a compact automated system that replaces manual basketing of frozen french fries. The Dispenser automatically weighs 12 ounce (350 gm), 16 ounce (450 gm) or 24 ounce (700 gm) loads of frozen fries and dispenses them into custom fry baskets.

The Dispenser's Hopper holds 42 lbs. (19 kg) of frozen french fries prior to basket loading. A rotating Dispenser Drum inside the Hopper transfers the frozen fries onto the Accumulator Doors where a weight sensor accurately weighs the fries.

Empty baskets are manually placed on the Upper Guide. The baskets slide under the Accumulator Doors where fries are dispensed into them. The Basket Lift then lowers the filled baskets onto the Lower Guide where the baskets wait to be picked up by a crew person.

INTENDED USE

The AFD-280E Dispenser is intended to dispense only frozen french fries. All food should be stored and handled according to industry recommendations. The AFD-280E Dispenser is not intended to be used for storage of food and should be cleaned regularly as described in the manual in order to avoid spoilage and contamination.

HAZARD COMMUNICATION STANDARD (HCS)

The procedures in this manual may include the use of chemical products. These chemical products will be highlighted with boldface letters followed by the abbreviation (HCS) in the text portion of the procedure. See the HCS Manual for the appropriate Material Safety Data Sheets (MSDS).

NOTE: This equipment is manufactured in the U.S., therefore all hardware measurements are in English, and the metric conversions stated are approximate.

IMPORTANT!

This manual contains operational and service information for Model AFD-280E Dispenser. All Dispensers post serial #AFER9903B00384 are manufactured with the Non-Contact Weight Sensor (NCWS) which replaces the Load Cell.

Bold face type within brackets [ ] will indicate operational and service procedures for the Non-Contact Weight Sensor (NCWS) models.

SPECIFICATIONS

Features:

Bulk storage of 42 lb. / 19kg frozen product

Manual or automatic Dispense modes

Electrically driven

Holds 7 Custom Fryer Baskets

Disassembles for cleaning

Electrical Requirements:

U.S./Canada (UL Listed):

110 Volts a.c., 60 Hertz, 1Ø, 0.7 A

International (CE Marked):

220-240 Volts a.c., 50 Hertz, 1Ø, 2.0A.

Internal Circuit Breaker: 5 Amps

Additional Equipment Information:

Noise Emissions: < 70 dB(A)

Maximum Altitude: 6000 ft. (1525 meters)

Maximum Humidity: 95% non-condensing

Ambient Temperature: 4° - 25°C (40° - 77°F)

Date of Manufacture:

The manufacturing date is encoded into the serial number identification label on the side panel of the Dispenser.

Example: S/N AFER0403C000000 indicates a manufacturing date of 03/04 or March 2004.

Space Requirements:

Clear floor space near fry vat at least 28 inches (72 cm) wide and 24 inches (60 cm) deep. Basket Handles will extend to 32 inches (81 cm). This equipment must be placed on a horizontal surface with a tilt of less than 2 degrees. This equipment is only to be installed in locations where use and maintenance is restricted to trained personnel.

FCC STATEMENT

WARNING: This equipment generates, uses, and can radiate radio frequency energy and, if not installed and used in accordance with the instruction manual, may cause interference to radio communications.

Copyright © 2004 Automated Equipment LLC. All Rights Reserved

WARRANTY

The terms “we”, “us”, “our” or “factory” hereinafter refer to Automated Equipment LLC. We warrant the purchased product to be free from manufacturing defects in material and workmanship under normal use and conditions for the period and component specified below:

Components covered	Term
Electronic Circuit Board Assemblies	1 year
Electrical and Mechanical Moving Parts	1 year
Structural frame work or enclosures	1 year
Crew removable components:	
Drip Tray	90 days
Hopper, Hopper Lid, and Diverter	90 days
Drum	90 days
Hopper Extension	90 days
Lift Saddle Assembly	90 days
Guide Assemblies & Slides	90 days
Crumb Tray	90 days
Custom Baskets	90 days
Power Cord	90 days

The Warranty period commences on the date of shipment of the Dispenser (hereinafter “Product”) from our manufacturing facility.

EXCEPT AS OTHERWISE PROVIDED HEREIN WE MAKE NO OTHER WARRANTIES, EXPRESSED OR IMPLIED AND SPECIFICALLY DISCLAIM ANY WARRANTY OF MERCHANTABILITY OR FITNESS FOR A PARTICULAR PURPOSE.

We shall not be liable for any direct, indirect, consequential damages (including damages for loss of business profits, business interruption, loss of business information and the like) arising out of the use of or inability to use the Product.

THIS WARRANTY IS VOID IF THE PRODUCT IS NOT FUNCTIONING CORRECTLY DUE TO ABUSE OR NEGLECT BY THE PURCHASER, ITS EMPLOYEES, AGENTS, OR OTHER REPRESENTATIVES EITHER BY BREAKING, BENDING, MISUSE, ABUSE, DROPPING, ALTERATION, IMPROPER MAINTENANCE OR ANY OTHER FORM OF NEGLECT OR IMPROPER USAGE. THIS WARRANTY DOES NOT COVER DAMAGE TO THE PRODUCT BY NATURAL CAUSES SUCH AS LIGHTNING, ELECTRICAL CURRENT FLUCTUATIONS, FLOOD, FIRE, TORNADOES, OR OTHER ACTS OF GOD. WE WILL INVOICE PURCHASER FOR REPAIRS MADE NECESSARY BY THE HEREIN LISTED CAUSES.

This warranty is governed by the substantive laws of Minnesota, U.S.A., without giving effect to the conflict of law provisions.

This warranty is non-transferable and applies only to the original purchaser.

Copyright © 2004 Automated Equipment LLC. All Rights Reserved

REQUESTING SERVICE, ASSISTANCE, OR PARTS

WARRANTY SERVICE

Warranty service must be initiated by calling our Technical Support Hot Line at 1-800-248-2724 (U.S./Canada) or 651-385-2273 to establish all warranty requests.

Our Technical Support personnel will determine the cause of failure and provide the appropriate resolution. If replacement parts are required, parts will be provided by the factory or by an authorized Service Support Center/Parts Distributor.

We will make all reasonable efforts to perform such repairs during normal business hours, and will not be responsible for any after-hours or holiday charges.

NON-WARRANTY SERVICE

Service is normally conducted by customer appointed personnel, or by contracting a local service agent. Service fees are in accordance with industry standards.

Replacement parts are available through local Service Support Center/Parts Distributors or direct from the factory by calling 1-800-248-2724 (U.S./Canada) or 651-385-2273 in the event a local distributor is not available.

Our Technical Support Hot Line is available for telephone assistance providing factory product technical support, parts and parts information, and service agent referral. Contact our Technical Support Hot Line at 1-800-248-2724 (U.S./Canada) or 651-385-2273.

Record the following information for your records:

_____
Date of Installation

_____
Service Agency Telephone

_____
Serial Number

When repairing this unit, use only replacement parts supplied by the factory, or supplied by a factory Authorized Parts Distributor. Use of replacement parts other than those supplied by the factory or by a factory Authorized Parts Distributor will void the warranty.

All charges for parts and shipping are F.O.B. factory, and are subject to change without notice. Prices will be those in effect at the time of shipment.

We reserve the right to make suitable substitutions in materials, depending upon their availability.

WARNING!

Only trained and/or qualified personnel should perform service to this equipment.

Service functions described in this manual could cause irreversible damage to the equipment and/or injury to personnel if performed improperly.

If the power cord is damaged, it must be replaced by the manufacturer or its service agent or a similarly qualified person in order to avoid a hazard.

Copyright © 2004 Automated Equipment LLC. All Rights Reserved

SAFETY

Here are some guidelines for operating and maintaining the AFD-280E Dispenser:

- Disconnect the Dispenser Power Cord from the wall outlet before inspecting.
- Inspect the Dispenser on a regular basis to identify problems before they occur.
- Keep the Dispenser clean.
- Keep hands away from the Accumulator Doors and Dispenser Drum while the Dispenser is operating:
- Fryer Baskets may be hot. Pick them up by the handles only.
- Do NOT roll the Dispenser to the back sink for cleaning, this will cause unnecessary wear on the Dispenser.
- If the supply cord is damaged it must be replaced by the manufacturer or its service agent or a similarly qualified person in order to avoid a hazard.
- DO NOT SPRAY DOWN THE DISPENSER WITH WATER. It is not sealed against jetting water and contamination may get into sensitive components. This will void the warranty

WARNING!
Only trained and/or qualified personnel should perform service to this equipment.
Service functions described in this manual could cause irreversible damage to the equipment and/or injury to personnel if performed improperly.

INTERNATIONAL SAFETY LABELING

International Safety Labeling is represented with the symbols illustrated below. The labels are affixed to the Hopper to clearly indicate areas that could be harmful to the operator of the Dispenser.
These safety issues are:

1. **BASKETS MAY BE HOT:** Baskets should always be picked up by the provided handle.
2. **NO HANDS BELOW:** Hands should not be placed near or below the Accumulator Doors while the Dispenser is energized.

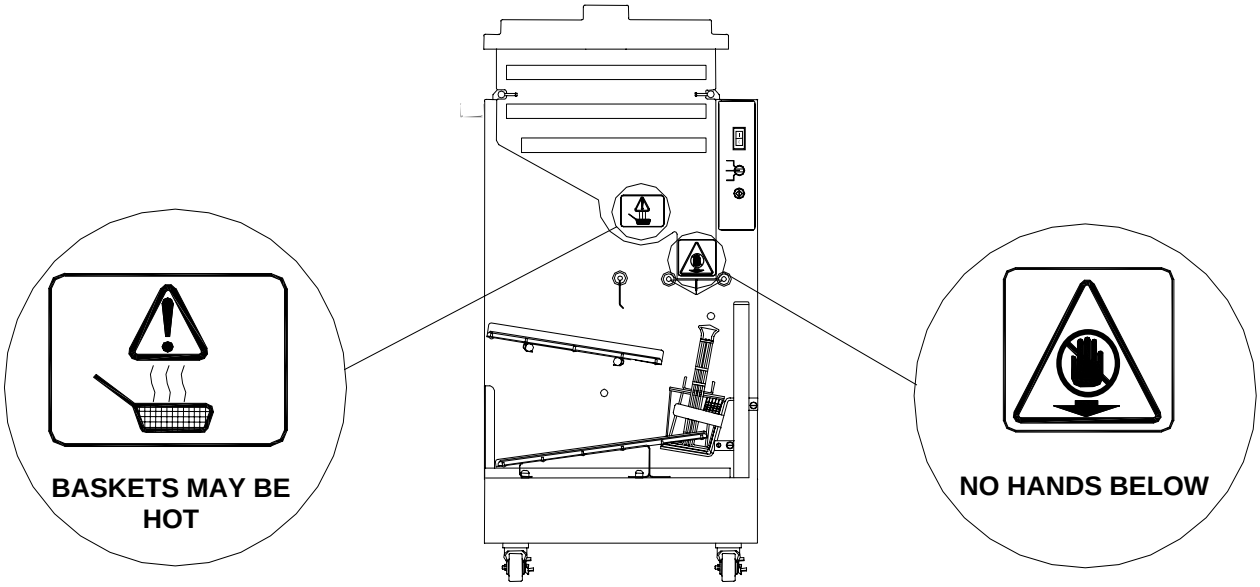

Copyright © 2004 Automated Equipment LLC. All Rights Reserved

ASSEMBLING THE DISPENSER

INSTALL DRIP TRAY (Fig. 1)

- Position the Drip Tray with the Basket Stop away from the Lift Saddle as shown.
- Slide the end of the Drip Tray under the Lift Saddle.
- Line up the holes in the Drip Tray with the Locator Pins and set the Drip Tray down over the Locator Pins.

INSTALL LOWER GUIDE (Fig. 2)

- Position the Lower Guide with the high end toward the Lift Saddle. The low end should be toward the Basket Stop as shown.
- Line up the holes in the Lower Guide with the Locator Pins and set the Lower Guide down over the Locator Pins.

INSTALL UPPER GUIDE (Fig. 3)

- Locate the Hooked Tab and the Straight Tab on the bottom of the Upper Guide.
- Position the Upper Guide with the Hooked Tab away from the Lift (as shown). Tilt the Upper Guide back so that the end near the Lift is two to three inches (5-10cm) higher than the end with the hooked tab.
- Place the Hooked Tab of the Upper Guide around the LEFT Guide Support . Align the slot in the Hooked Tab with the screw in the middle of the Guide Support, then slide the Upper Guide to the RIGHT, hooking it on the LEFT Guide Support.
- Align the slot in the straight tab of the Upper Guide with the screw on the RIGHT Guide Support. Press the upper guide down, snapping it into place.

INSTALL THE HOPPER AND DRUM (Fig. 4 & 5)

- Find the square opening in one end of the Dispenser Drum.
- Place the Dispenser Drum in the Hopper, aligning the square opening on the Dispenser Drum with the hole in the back of the Hopper.
- Grasp the Hopper so that the hole is toward the Dispenser.
- Align the indentations on the Hopper with the Hopper Support Bars.
- Push the Hopper forward onto the Hopper Support Bars until the Drum Motor shaft touches the Dispenser Drum.

CAUTION: Do NOT force the Hopper back; this could damage the Hopper or Drum.

- Rotate the Dispenser Drum (CLOCKWISE or COUNTER-CLOCKWISE) while applying gentle pressure to the Hopper until you can easily slide the Hopper fully onto the Hopper Support Bars.
- Lock the Hopper onto the Dispenser by pressing the Locking Pins on the ends of the Hopper Support Bars towards each other.

PLACE THE DIVERTER IN THE HOPPER (Fig. 6)

Be sure that it is hooked over the RIGHT edge of the Hopper.

PLACE THE HOPPER LID ON THE HOPPER (Not pictured)

Hook the lid's tab over the back rim of the Hopper, then set the Lid down.

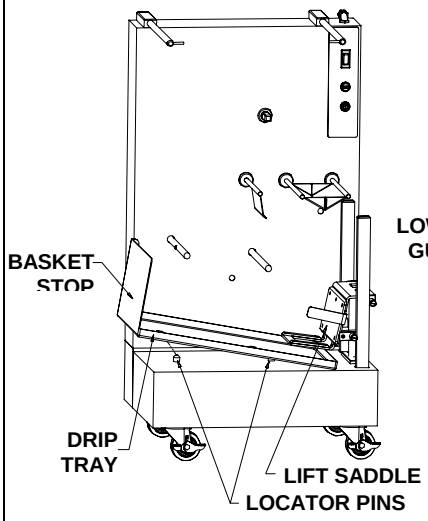

FIGURE 1

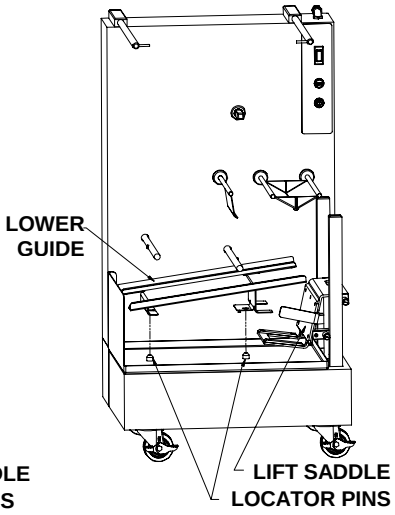

FIGURE 2

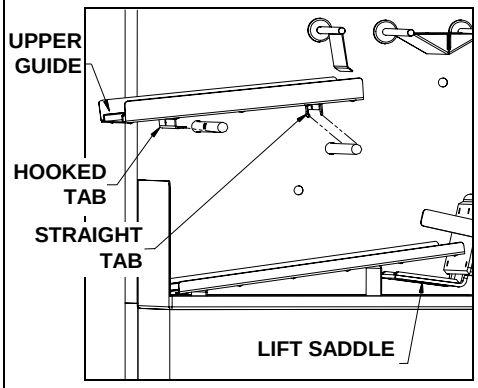

FIGURE 3

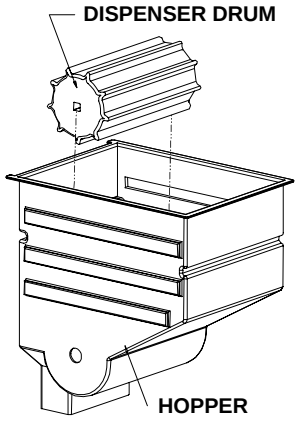

FIGURE 4

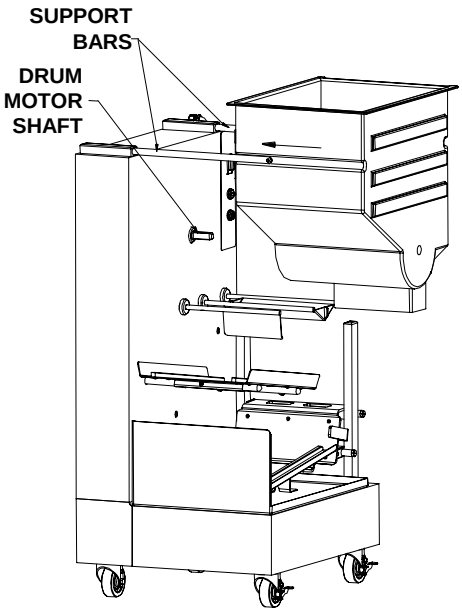

FIGURE 5

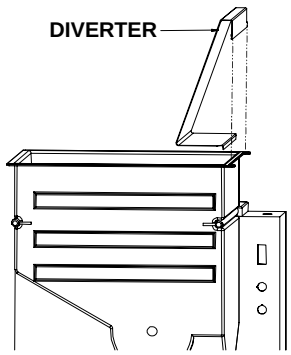

FIGURE 6

Copyright © 2004 Automated Equipment LLC. All Rights Reserved

DAILY SET-UP

1. Verify that the Power Switch is in the OFF position.
2. Plug the Power Cord into a wall outlet.
3. Load the Hopper with frozen french fries. DO NOT SHAKE OR DROP the fries into the Hopper (refer to "LOADING THE HOPPER", page 8).
4. Turn the Load Select Switch to the desired load weight.
5. Fill the Upper Guide with empty Custom Baskets.
6. Turn the Power Switch to the ON position (illuminated). Electric motors will orient themselves to starting positions and the dispenser will initiate the filling process.
7. Use filled Baskets from the Lower Guide for Fry production.
8. Return empty Baskets to the Upper Guide for refilling after the cooking cycle is complete.

LOADING THE HOPPER

To achieve optimum fry yield and the most consistent basket loads, it is important to use the following technique for loading frozen fries into the hopper. Depending on your fry supplier, you will receive your french fries packaged in boxes of six pounds each, or bags of six pounds each. These bags or boxes will be packed six to a case. The hopper will accept one full case plus one bag or box of french fries (42 lbs. or 19 kg).

For each bag or box of french fries:

1. Remove the bag or box of french fries from the case. Be careful not to crush the fries.
2. Open the top of the bag or box completely.

   NOTE: If your supplier uses bags, be careful that the top is fully open. If it is partially open, the bag may retain fries.
3. Hold the opened end of the box or bag closed with your hand and lay it in the hopper with the opening toward the side opposite of the diverter.
4. Release the opened end of the bag or box.
5. Empty the bag or box into the hopper by pulling it evenly toward the Diverter. When adding multiple bags of fries, alternate the placement of the bag or box in the hopper opposite of the previous bag or box. The second bag of fries should be emptied into the Hopper with the opening toward the Diverter, and pulling it evenly toward the Hopper Wall opposite the Diverter.

   NOTE: This criss-cross loading method assures an even distribution of fry lengths in the Hopper and the Baskets.

   NOTE: Do NOT shake or drop fries from the bag or box into the Hopper.

   NOTE: If the loading is done correctly, you should be able to leave a uniform layer of fries in the hopper by simply pulling the bag or box across the hopper and then out of the hopper.
6. Repeat steps 1 through 5 until the hopper is full.

   NOTE: Do NOT fill the hopper past the top.
7. Close the lid on the hopper by engaging the hook at the back of the hopper, and setting the lid down

DAILY CLOSING

1. Turn the Power Switch to the OFF position.
2. Remove all Baskets from the upper and Lower Guides. Discard and record the uncooked fries.

   NOTE: During the last few hours of the day, you may want to keep only two or three bags of french fries in the hopper and run the dispenser in SINGLE mode, to minimize waste.
3. Remove the Hopper Lid by lifting it UP and BACK to unhook the tab.
4. Hang the hopper lid on the front of the hopper, by hooking the tab on the lip of the hopper.
5. Discard and record any fries remaining in the Hopper at closing.
6. Check that the Accumulator Doors are empty of fries.
7. Disconnect the Power Cord from the electrical outlet
8. Remove the Diverter by grasping it and pulling it UP.
9. Slide the Locking Pins outward to release the Hopper.
10. Remove the Hopper (and the Dispenser Drum inside) by pulling the Hopper OUT and AWAY from the Hopper Support Bars.
11. Remove the Upper Guide assembly by lifting the RIGHT end and sliding it to the LEFT.
12. Remove the Lower Guide by lifting it straight UP.
13. Remove the Drip Tray by lifting it from the Basket Stop end and sliding it from under the saddle.
14. Take the hardware removed from the Dispenser to the back sink. Wash it in a hot solution of **McD APSC (HCS)**, rinse with clear water, sanitize and allow to air dry.
15. Roll the dispenser out from the wall, so that you can clean behind it and underneath it.

    NOTE: Do NOT roll the dispenser to the back sink for cleaning, this will cause unnecessary wear on the dispenser and possible premature failure.
16. Wipe down the dispenser with a hot solution of **McD APSC (HCS)** and water. Repeat wipe-down with clear water, sanitize and allow to air dry.

    NOTE: DO NOT SPRAY DOWN THE DISPENSER. It is not sealed against jetting water and contamination may get into sensitive components. SPRAYING MAY VOID THE WARRANTY!
17. Reassemble the dispenser.
18. Roll the dispenser back into place.

WARNING

PINCH HAZARD

Personnel should take care not to place hands or fingers near the Drum inside the Hopper, while this machine is in operation. Hands or fingers could be pinched between the Drum and the Hopper as the Drum turns.

Copyright © 2004 Automated Equipment LLC. All Rights Reserved

OPERATOR CONTROLS

The following switches and buttons are located on the Operator Panel:

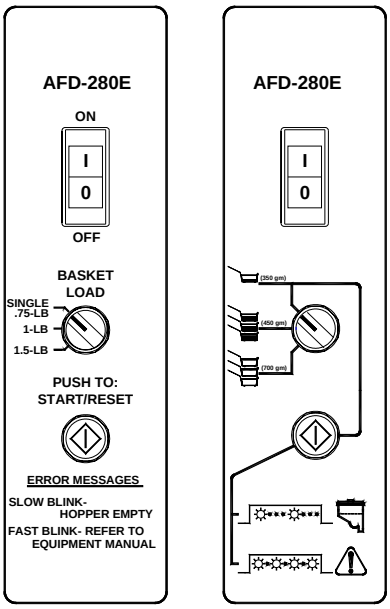

US/Canada **International**

Power Switch (Orange)
The Power Switch supplies electrical power to the Dispenser. It illuminates when the Dispenser has power. The Power Switch also functions as a circuit breaker for the machine.

Load Select Switch
The Load Select Switch has 3 positions that allow the operator to select Basket Load weights and control operation.

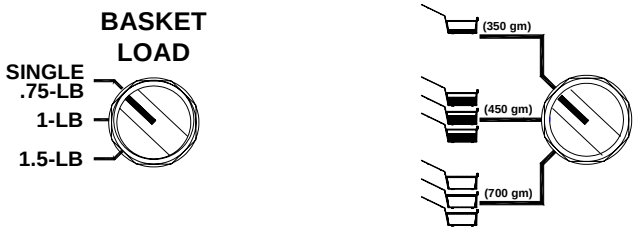

Position #1: Single basket loading. Press the Start/Reset Button to dispense a single basket of Fries. Pre-set to .75 lb./350 gm/Single mode.

NOTE: International units are factory set to automatic mode. US and Canadian units are factory set to single mode. This can be reconfigured by performing a front panel customization (see page 10).

Position #2: For Automatic dispensing of 1.0 lb./450 gm Basket Loads.

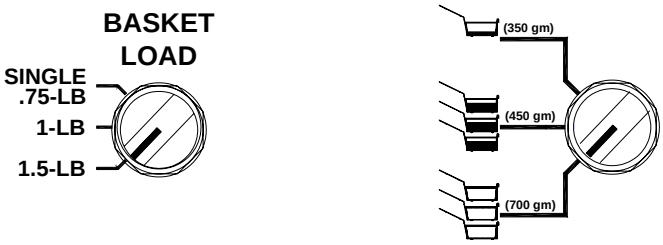

Position #3: For Automatic dispensing of 1.5 lb./700 gm Basket Loads.

Start/Reset Button (Green)
Press to start the loading of a single Basket if the Load Select Switch is set for SINGLE (0.75 lb./350gm). Press to reset a System Error or an empty Hopper warning. The symbols below the button provide an explanation of warning and error conditions.

A **slow blink** (about 1 per second) of the Start/Reset Button indicates either an empty Hopper or bridged fries.

A **fast blink** (about 5 per second) of the Start/Reset Button indicates a system error.

Copyright © 2004 Automated Equipment LLC. All Rights Reserved

FRONT PANEL OPERATIONS CUSTOMIZATION

Operational characteristics of the AFD-280E Dispenser can be customized using the front panel controls.

MAKE SWITCH POSITION #1 AUTOMATIC DISPENSING

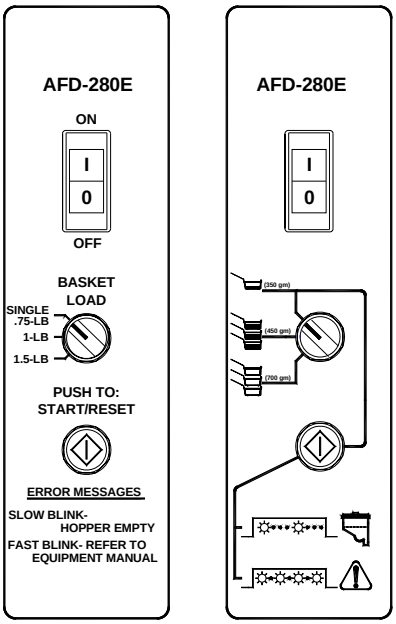

US/Canada **International**

- Turn the dispenser off. **Wait 15 seconds.**
- Select Position #1 (.75 lb.)
- Hold in the Start/Reset Button
- While holding in the Start/Reset Button, turn the Dispenser power ON (**I**). Automatic mode is indicated by the Start/Reset Button remaining on.

This modification to the dispenser operation is permanent: This setting does not change when the dispenser power is turned off. In order to return the dispenser to position #1 being Single mode, the procedure must be performed again.

NOTE: International units are factory set to automatic mode. US and Canadian units are factory set to Single mode.

BYPASS MODE OPERATION

Bypass Mode will allow the dispenser to remain functional in the event the weighing system or the basket sensors fail.

NOTE: The BYPASS mode has two methods of operation and the Dispenser will automatically select the appropriate method.

Method 1:
The Dispenser detects a functioning Weight Sensor.
The Dispenser will appear to operate normally, filling the accumulator with the correct weight of fries. The Start/Reset button must be pushed to dispense the fries into a basket. This method allows the Dispenser to operate with faulty basket sensors.

Method 2:
The Dispenser detects a failed Weight Sensor.
Holding in the Start/Reset Button, the Drum will turn to dispense fries onto the Accumulator Doors.
Releasing the Start/Reset Button stops the Drum motor, opens the Accumulator doors, closes the Stopgate, and then lowers the filled Basket.
After lowering the Basket, the Lift Saddle will come back up and the Stopgate will open to allow the next Basket to move into the Lift Saddle for filling.

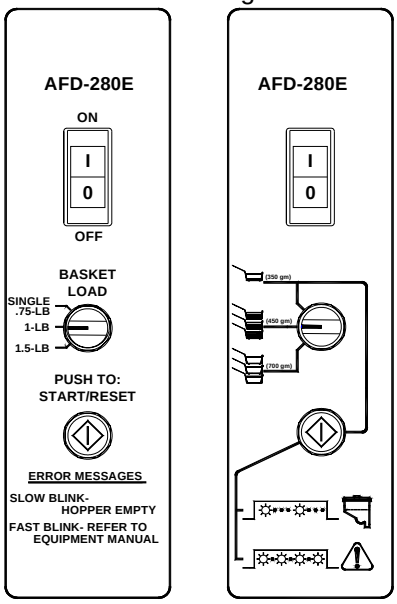

US/Canada **International**

To Engage the BYPASS Mode of operation:

- Turn the Dispenser off. **Wait 15 seconds**.
- Select Position #2.
- Hold in the Start/Reset Button
- While holding in the Start/Reset Button, turn the Dispenser power ON (**I**). Double flashing of the Start/Reset button indicates BYPASS

This modification to the Dispenser operation is temporary. When the Dispenser power is turned OFF (**O**), the Dispenser resets to normal operations when the power is turned ON (**I**) again.

NOTE: Allow 15 seconds before turning the Dispenser Power Switch ON (**I**) after being turned OFF (**O**).

Copyright © 2004 Automated Equipment LLC. All Rights Reserved

SEQUENCE OF OPERATION

Initial Power Up

The chart below is an example of the Dispenser's sequence of operations under the following conditions:

- The Hopper is fully loaded with french fries and properly installed on the Dispenser.
- There are 2 empty Baskets on the Upper Guide.
- There are no empty Baskets on the Lower Guide.
- The Dispenser Load Switch is in the 1.0 lb./450 gm position.

NOTE: The time for one basketing cycle is approximately 4 - 6 seconds.

Event	Response
Power Switch Turned **ON**	Stopgate moves to the home position. The Lift moves to the home position, pauses, then raises to the up position.
Dispensing Begins.	The Drum turns and fries are dispensed from the Hopper to the Accumulator Doors. The Accumulator Doors weigh the fries and signal to stop the Drum Motor when the 1.0 lb. (450 gm) weight is attained.
Stopgate opens.	When the weight is attained the Stopgate opens to allow a Basket to slide into the Lift Saddle.
Accumulator doors open and empty.	A sensor in the chassis of the Dispenser detects the Basket. If a Basket is not present, the Dispenser will wait until it detects the Basket. When the Basket is present, the Accumulator Doors open to dispense the fries into the Basket.
Stopgate Closes	The Stopgate closes to allow clearance of the filled Basket in the Lift Saddle.
Lift Saddle lowers Basket.	The Lift Saddle lowers the filled Basket to the Lower Guide. As the Basket slides down the Lower Guide, another sensor detects the Basket arriving on the Lower Guide..
Accumulator Doors close. Lift Saddle raises up.	The Accumulator Doors close and the Lift Saddle raises to the up position.
Stopgate opens.	Stopgate opens to allow the next empty Basket to slide into the Lift Saddle.
Restart of Dispensing.	Cycle starts over again. **Dispensing Begins** After filling the second Basket, the Dispenser will stop because there will not be a Basket detected in the Lift Saddle.

Copyright © 2004 Automated Equipment LLC. All Rights Reserved