BUNN®

GRINDERS

Includes: MHG, FPG, FPG-2, LPG-2, G1, G2, G3, G9, G9-2 & G9-2T DBC

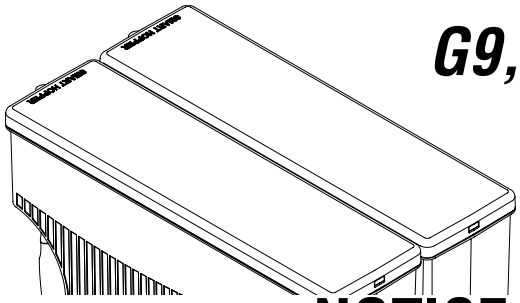

NOTICE

The Service and Repair manual for the BUNN Grinder family, is currently in progress.

For your convenience, we have provided Electrical Schematic Diagrams on the following pages.

Thank you for your patience.

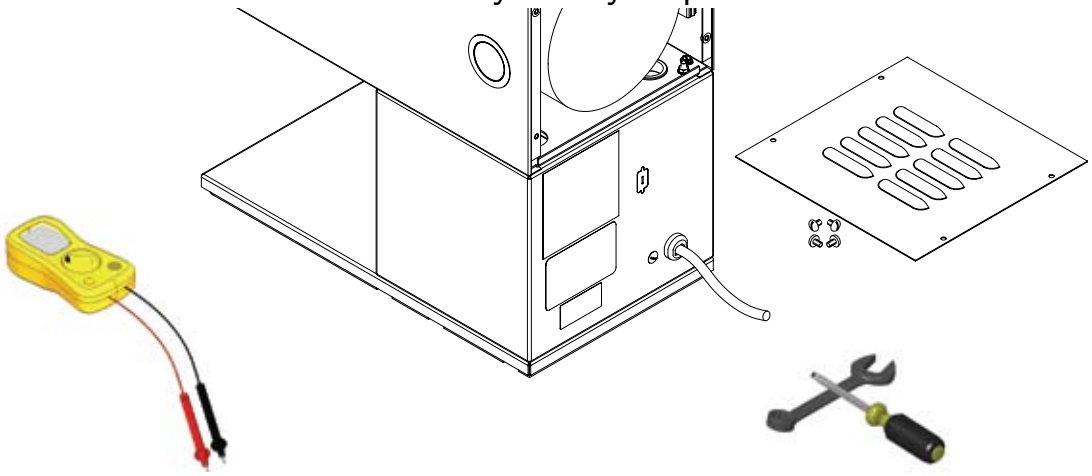

SERVICE & REPAIR MANUAL

BUNN-O-MATIC CORPORATION

POST OFFICE BOX 3227
SPRINGFIELD, ILLINOIS 62708-3227
PHONE: (217) 529-6601 FAX: (217) 529-6644

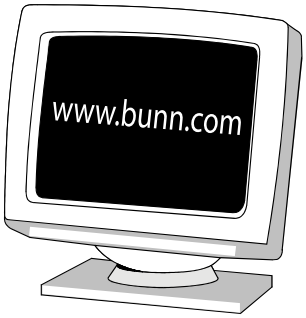

To ensure you have the latest revision of the Operating Manual, or to view the Illustrated Parts Catalog, Programming Manual, or Service Manual, please visit the Bunn-O-Matic website, at www.bunn.com. This is absolutely FREE, and the quickest way to obtain the latest catalog and manual updates. For Technical Service, contact Bunn-O-Matic Corporation at 1-800-286-6070.

.0000A 06/09 ©2009 Bunn-O-Matic Corporation

preliminary copy

SCHEMATIC WIRING DIAGRAM
G9-2 DBC, G9-2T DBC W/SMART FUNNEL™

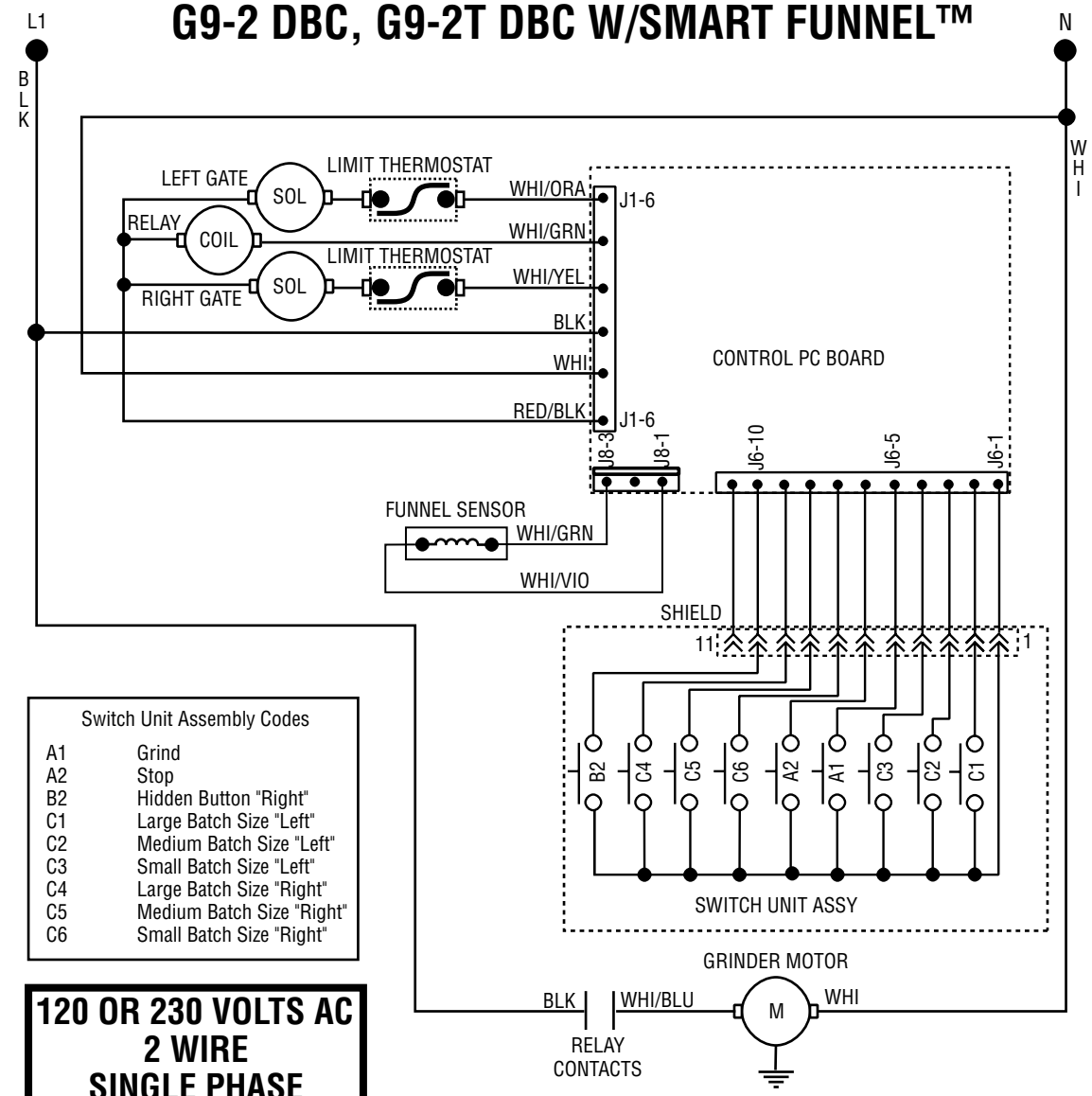

Switch Unit Assembly Codes	
A1	Grind
A2	Stop
B2	Hidden Button "Right"
C1	Large Batch Size "Left"
C2	Medium Batch Size "Left"
C3	Small Batch Size "Left"
C4	Large Batch Size "Right"
C5	Medium Batch Size "Right"
C6	Small Batch Size "Right"

120 OR 230 VOLTS AC
2 WIRE
SINGLE PHASE
50/60 HZ

SCHEMATIC WIRING DIAGRAM
G9-2 DBC, G9-2T DBC W/SMART FUNNEL™

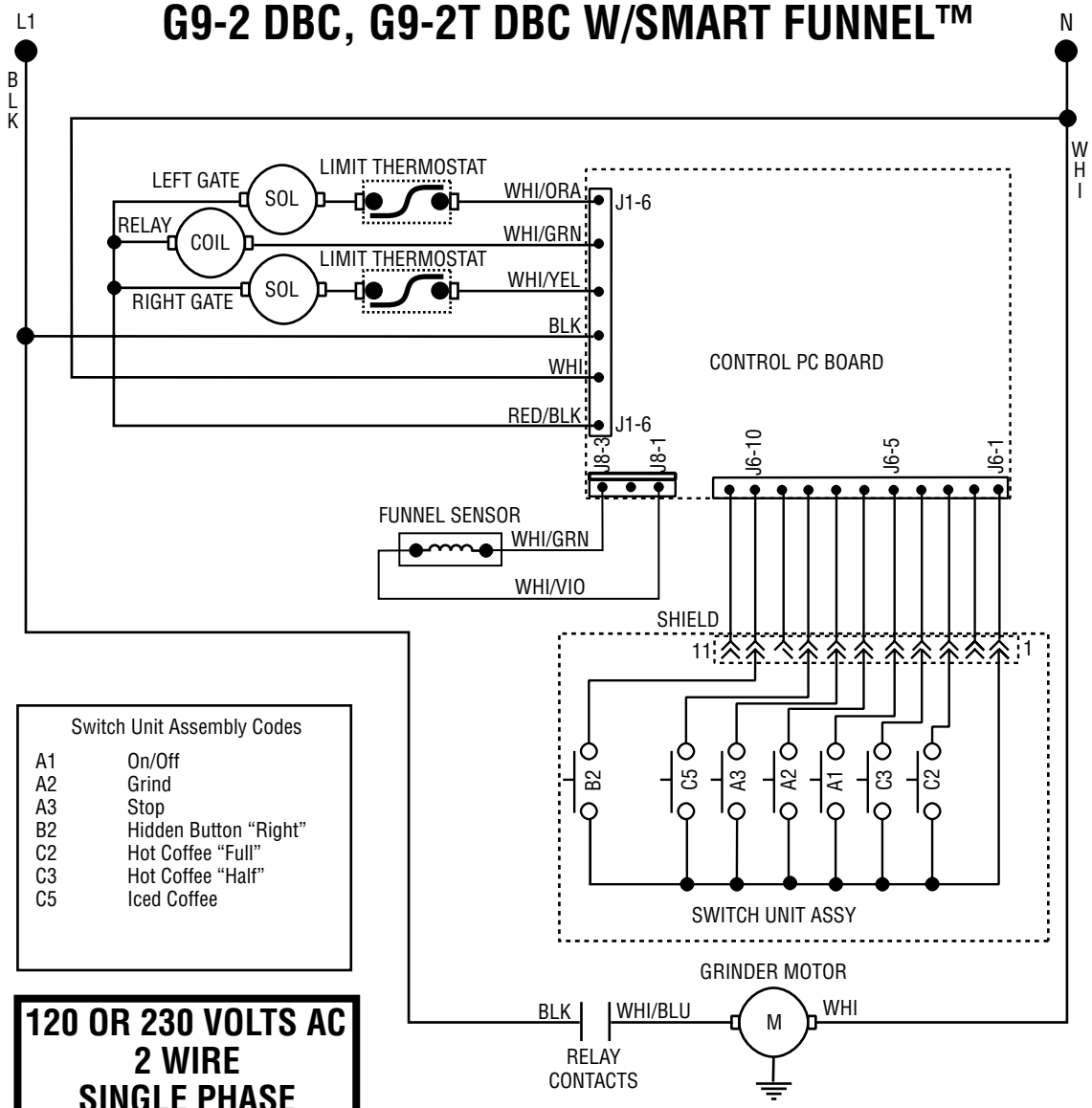

Switch Unit Assembly Codes

A1	On/Off
A2	Grind
A3	Stop
B2	Hidden Button "Right"
C2	Hot Coffee "Full"
C3	Hot Coffee "Half"
C5	Iced Coffee

120 OR 230 VOLTS AC
2 WIRE
SINGLE PHASE
50/60 HZ

WIRING DIAGRAMS

SCHEMATIC WIRING DIAGRAM
G9-2TB DBC W/SMART FUNNEL™

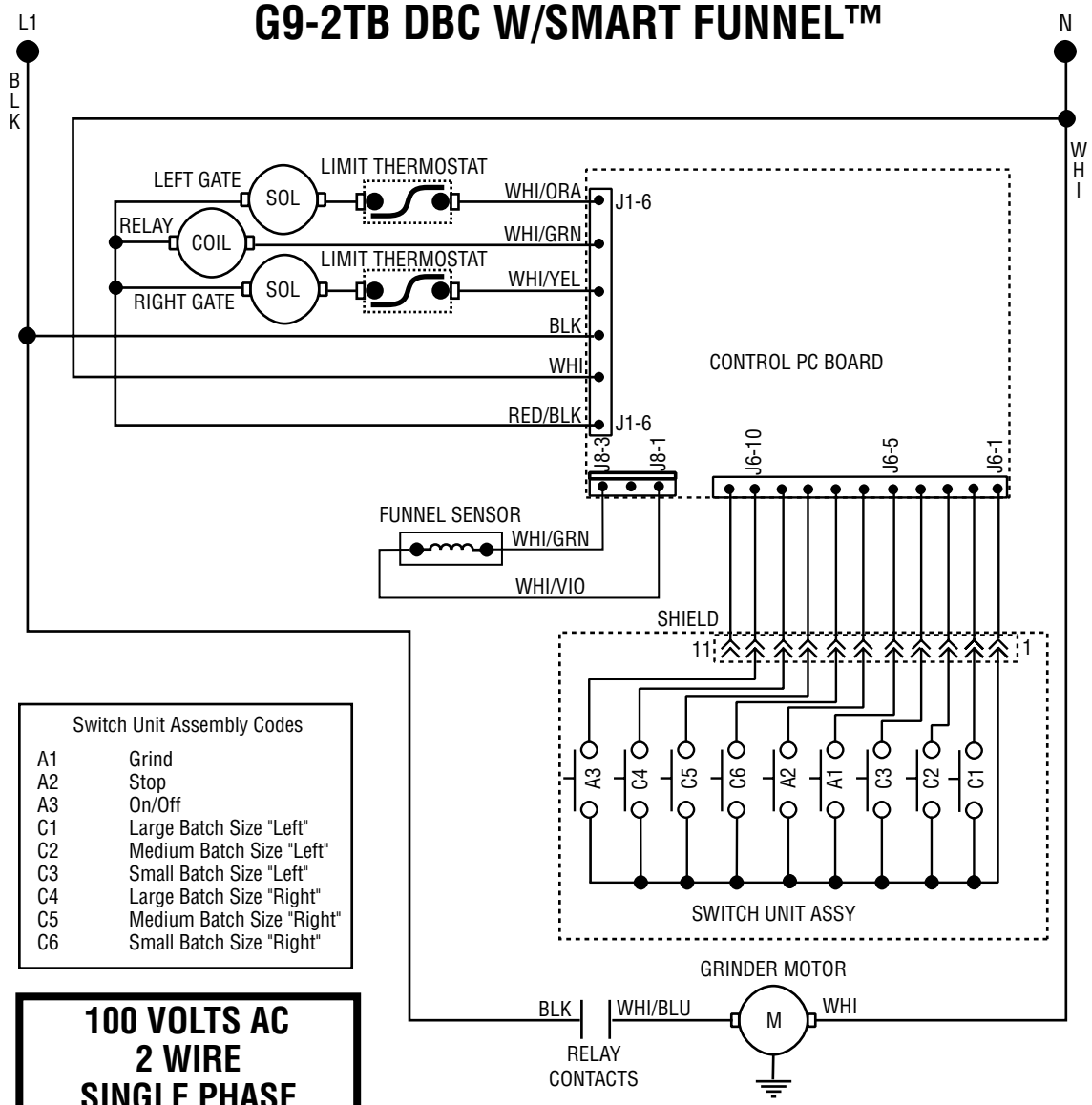

Switch Unit Assembly Codes	
A1	Grind
A2	Stop
A3	On/Off
C1	Large Batch Size "Left"
C2	Medium Batch Size "Left"
C3	Small Batch Size "Left"
C4	Large Batch Size "Right"
C5	Medium Batch Size "Right"
C6	Small Batch Size "Right"

100 VOLTS AC
2 WIRE
SINGLE PHASE
50 HZ

preliminary copy

WIRING DIAGRAMS

SCHEMATIC WIRING DIAGRAM MHG

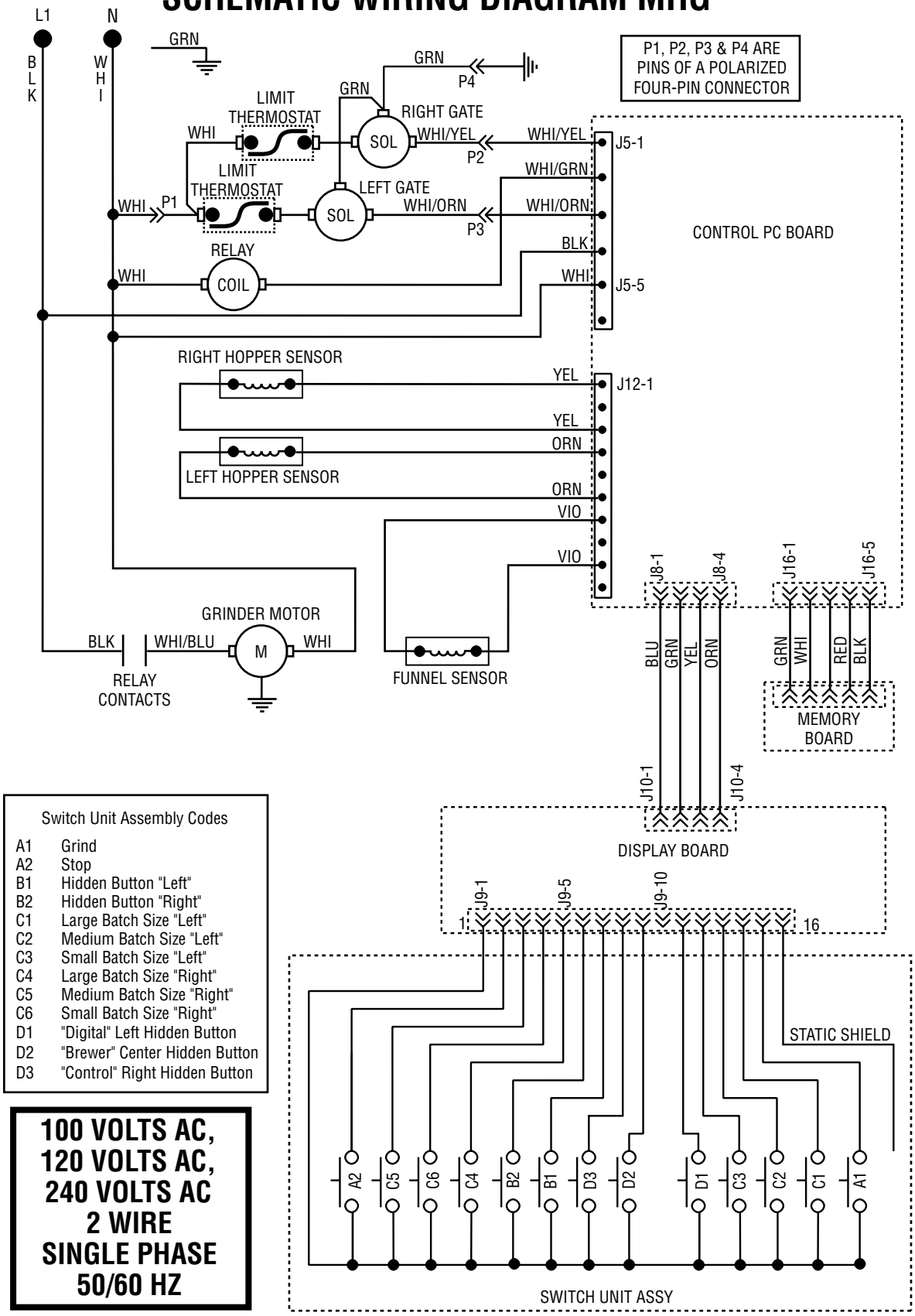

Switch Unit Assembly Codes

A1	Grind
A2	Stop
B1	Hidden Button "Left"
B2	Hidden Button "Right"
C1	Large Batch Size "Left"
C2	Medium Batch Size "Left"
C3	Small Batch Size "Left"
C4	Large Batch Size "Right"
C5	Medium Batch Size "Right"
C6	Small Batch Size "Right"
D1	"Digital" Left Hidden Button
D2	"Brewer" Center Hidden Button
D3	"Control" Right Hidden Button

100 VOLTS AC,
120 VOLTS AC,
240 VOLTS AC
2 WIRE
SINGLE PHASE
50/60 HZ

preliminary copy

SCHEMATIC WIRING DIAGRAM
LPG-2E, LPGB-2E

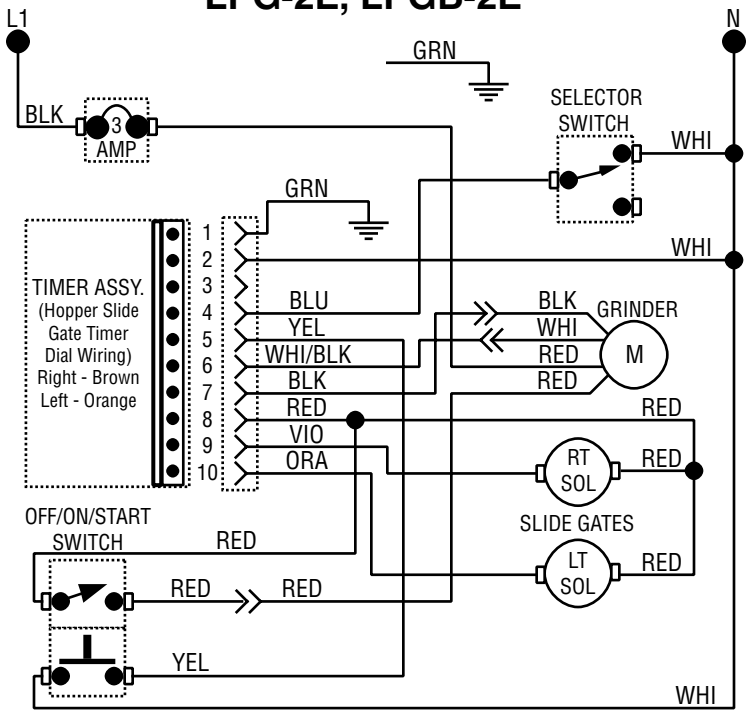

100 VOLTS AC
120 VOLTS AC
2 WIRE
SINGLE PHASE
60 HZ

preliminary copy

WIRING DIAGRAMS

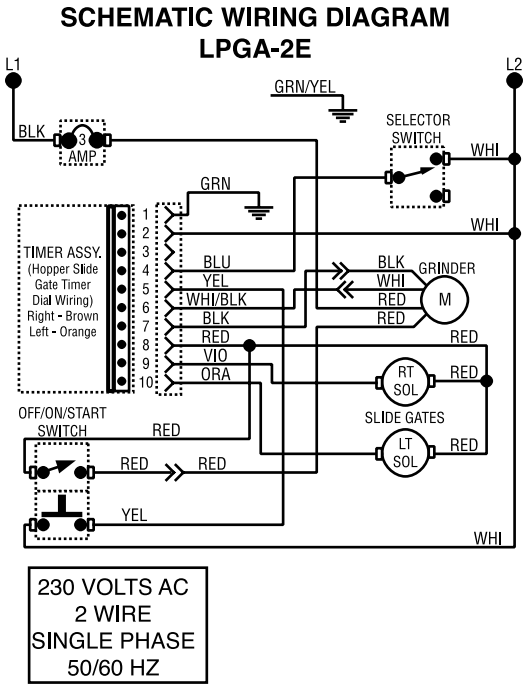

SCHEMATIC WIRING DIAGRAM
LPG

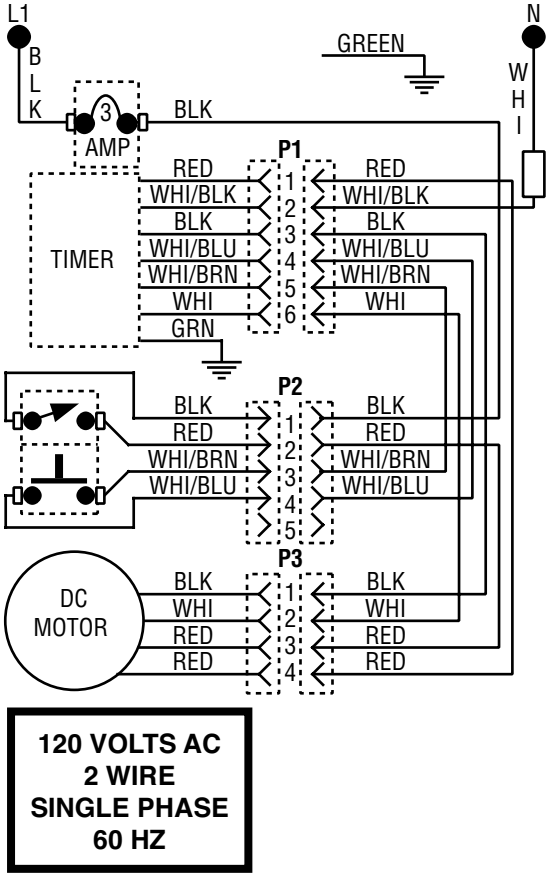

120 VOLTS AC
2 WIRE
SINGLE PHASE
60 HZ

preliminary copy

WIRING DIAGRAMS

SCHEMATIC WIRING DIAGRAM
LPG-A

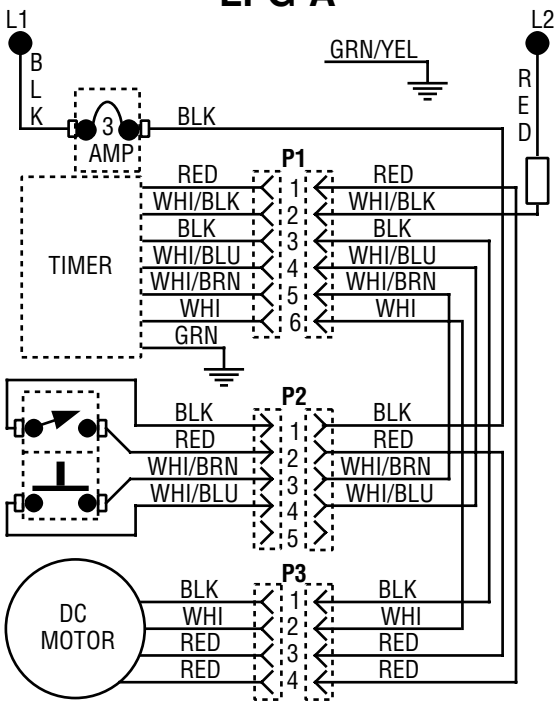

230 VOLTS AC
2 WIRE
SINGLE PHASE
50/60 HZ

preliminary copy

WIRING DIAGRAMS

SCHEMATIC WIRING DIAGRAM
LPG W/Capacitor

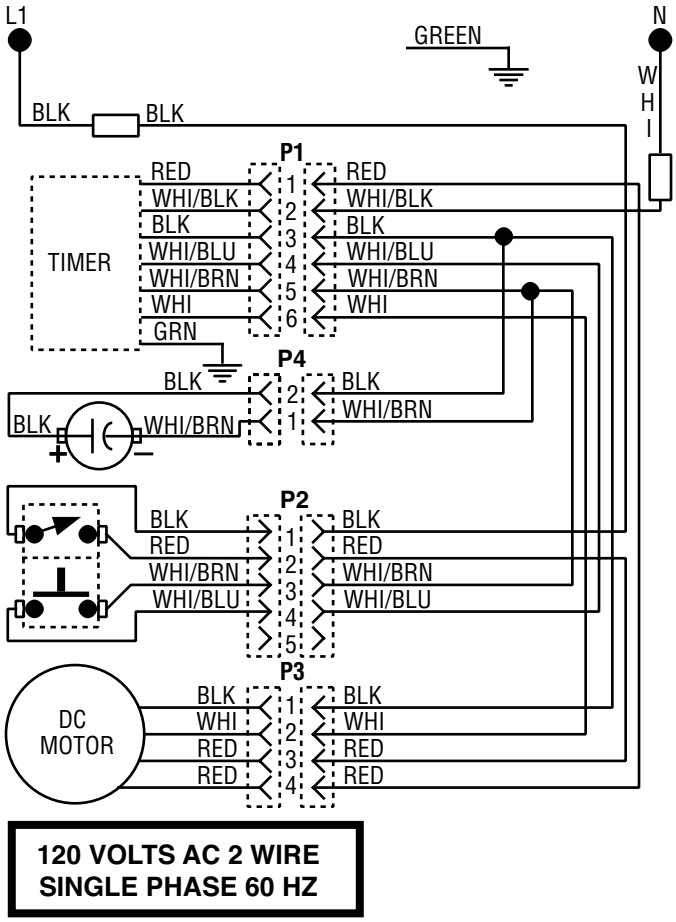

preliminary copy

WIRING DIAGRAMS

SCHEMATIC WIRING DIAGRAM
LPG-B

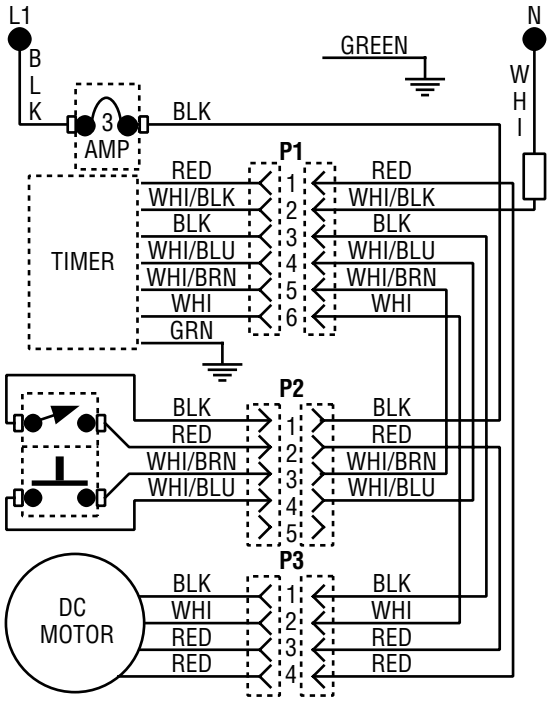

100 VOLTS AC
2 WIRE
SINGLE PHASE
50-60 HZ

preliminary copy

WIRING DIAGRAMS

SCHEMATIC WIRING DIAGRAM G1A, G2A & G3A

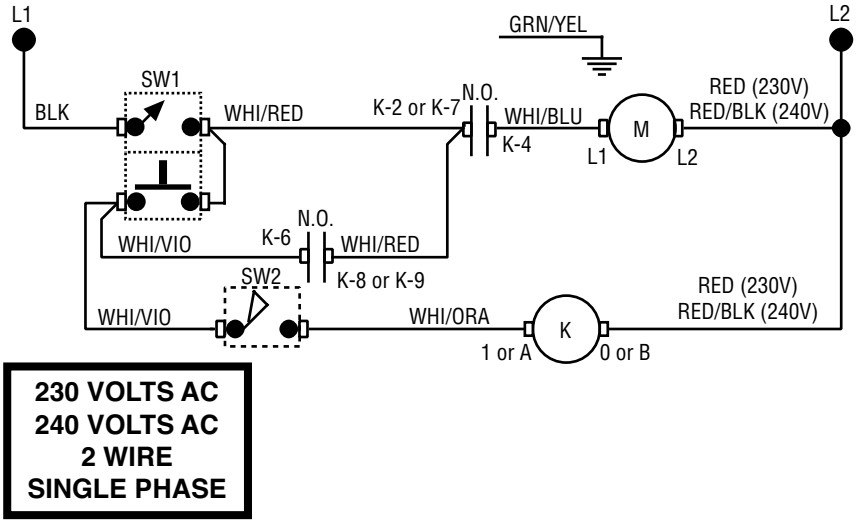

SCHEMATIC WIRING DIAGRAM G1, G2 & G3

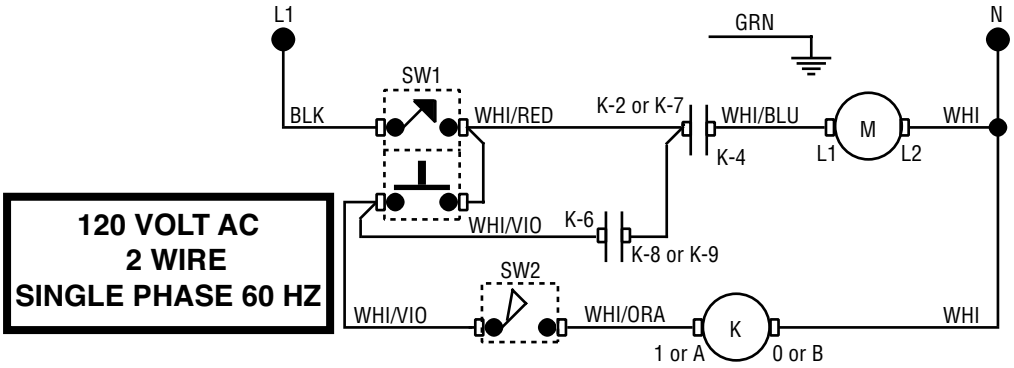

SCHEMATIC WIRING DIAGRAM G1-MD

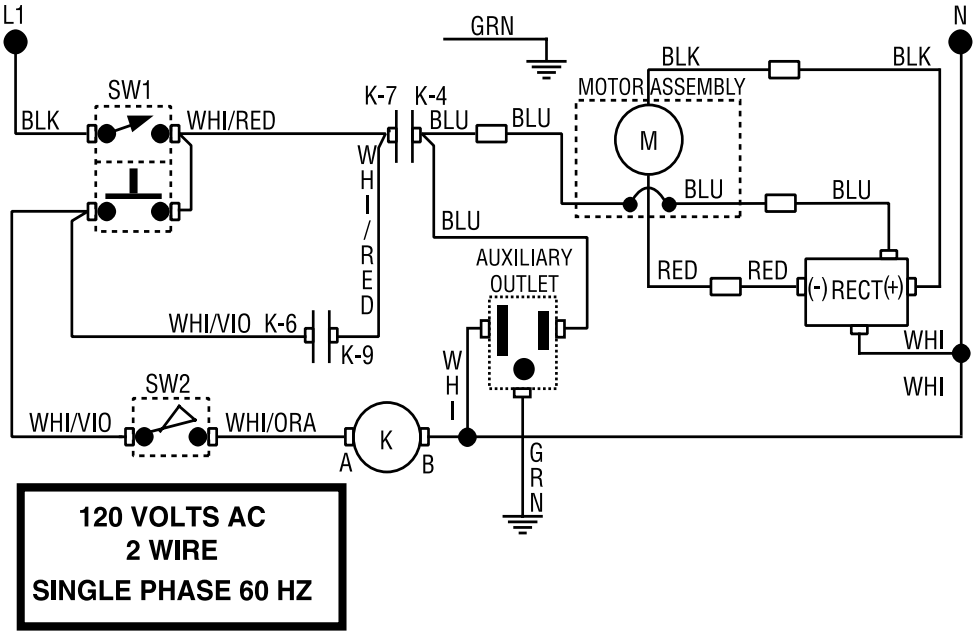

preliminary copy

WIRING DIAGRAMS

SCHEMATIC WIRING DIAGRAM G9

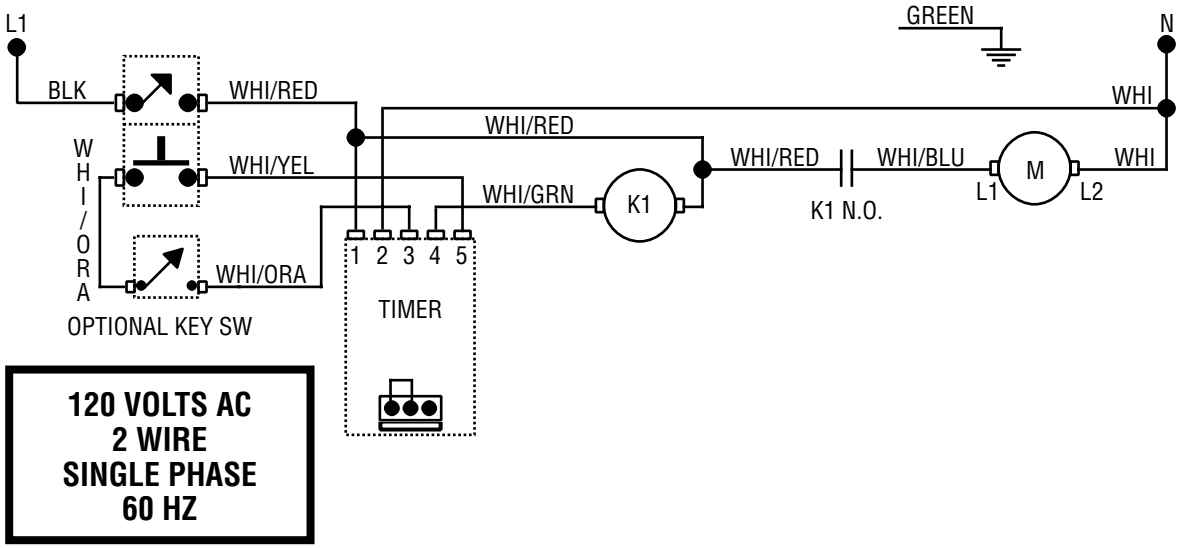

SCHEMATIC WIRING DIAGRAM G9-URN/CARAFE

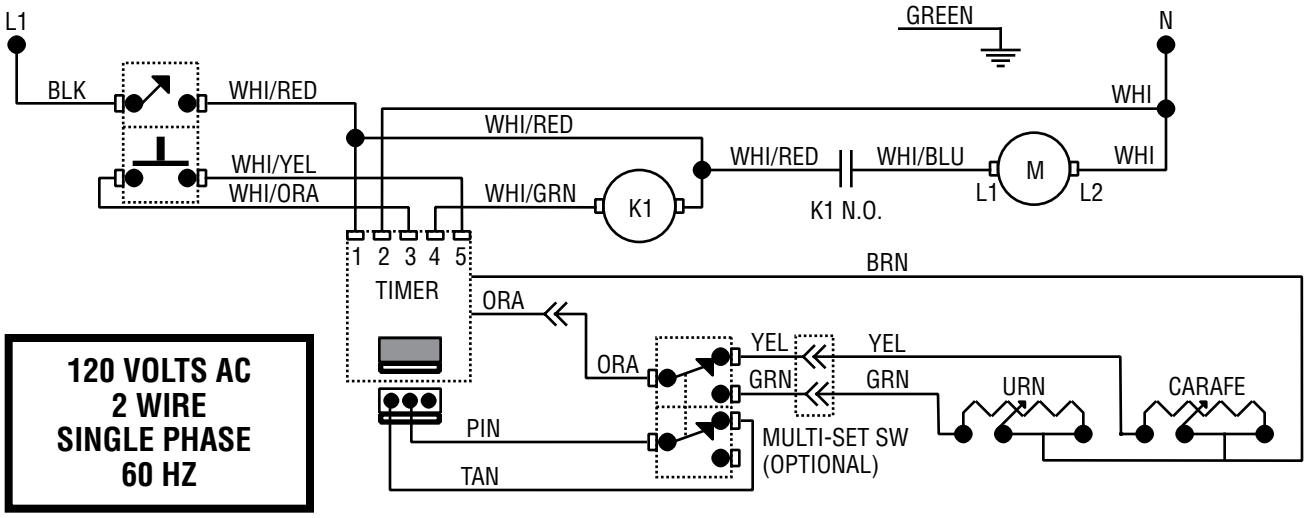

preliminary copy

SCHEMATIC WIRING DIAGRAM G9A HD

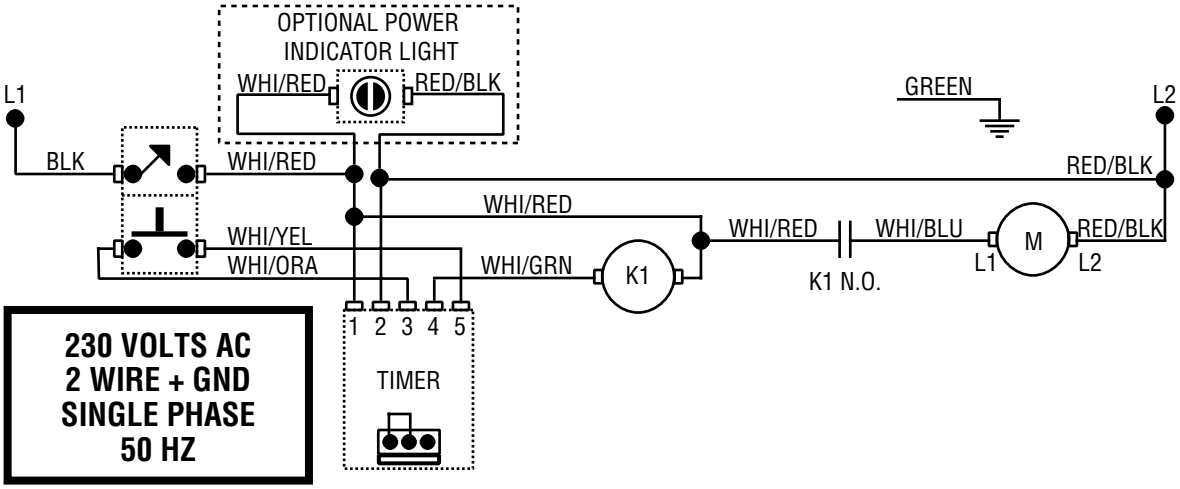

preliminary copy

SCHEMATIC WIRING DIAGRAM G9

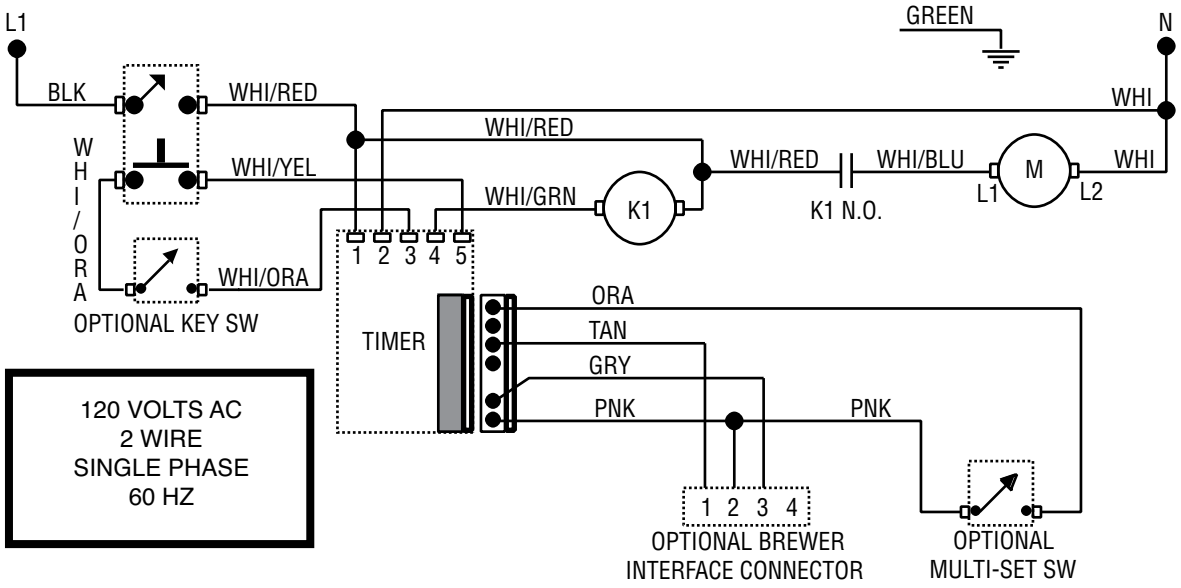

SCHEMATIC WIRING DIAGRAM G9

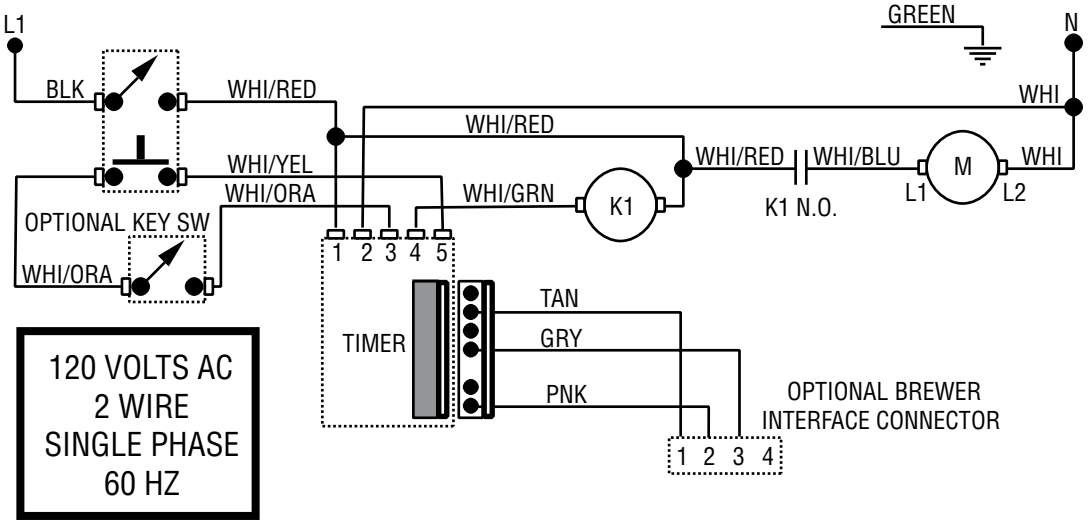

preliminary copy

WIRING DIAGRAMS

SCHEMATIC WIRING DIAGRAM G9-2A HD

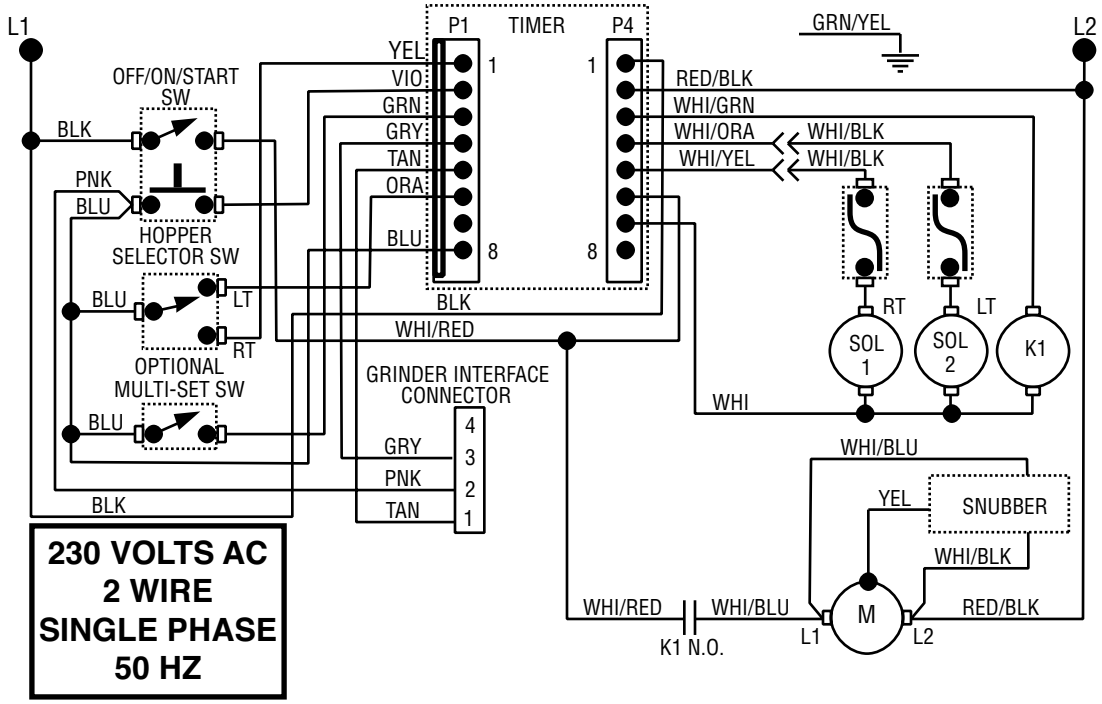

SCHEMATIC WIRING DIAGRAM G9-2 HD (DIGITAL TIMER W/BATCH SELECTOR)

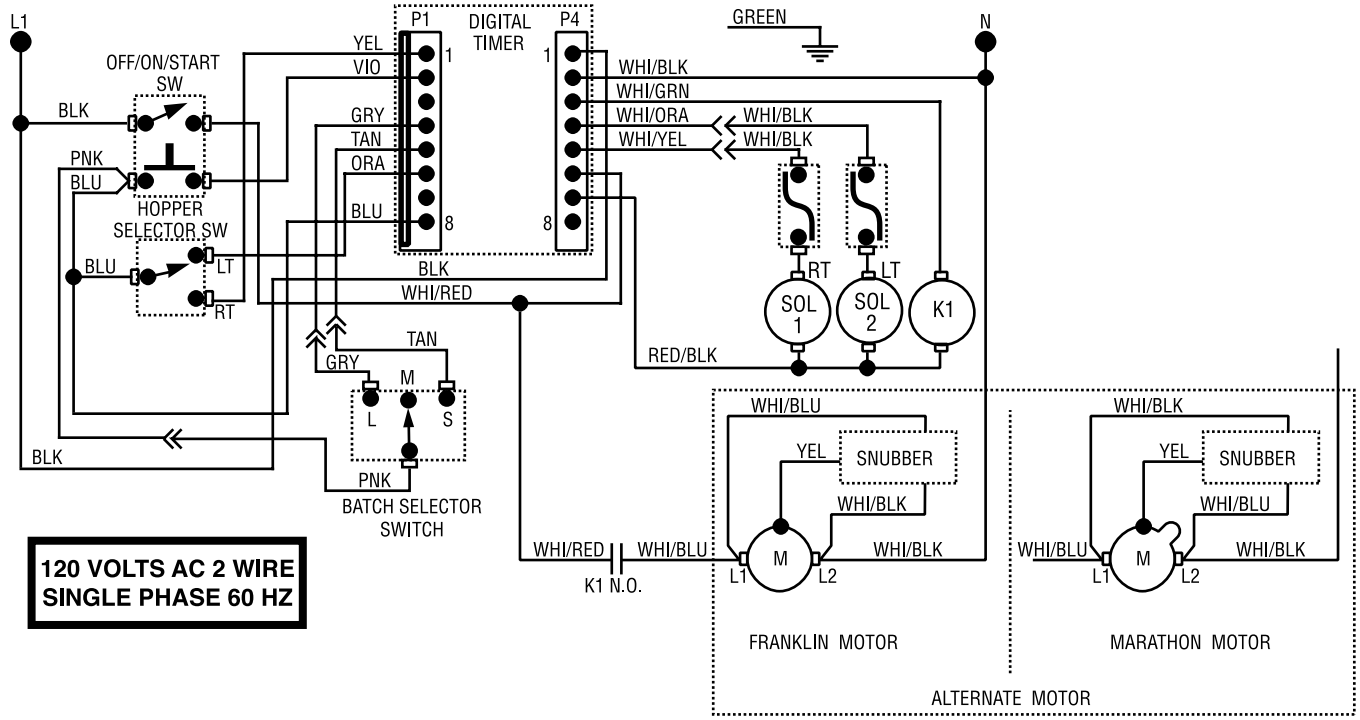

preliminary copy

WIRING DIAGRAMS

SCHEMATIC WIRING DIAGRAM G9-2 HD (DIGITAL TIMER)

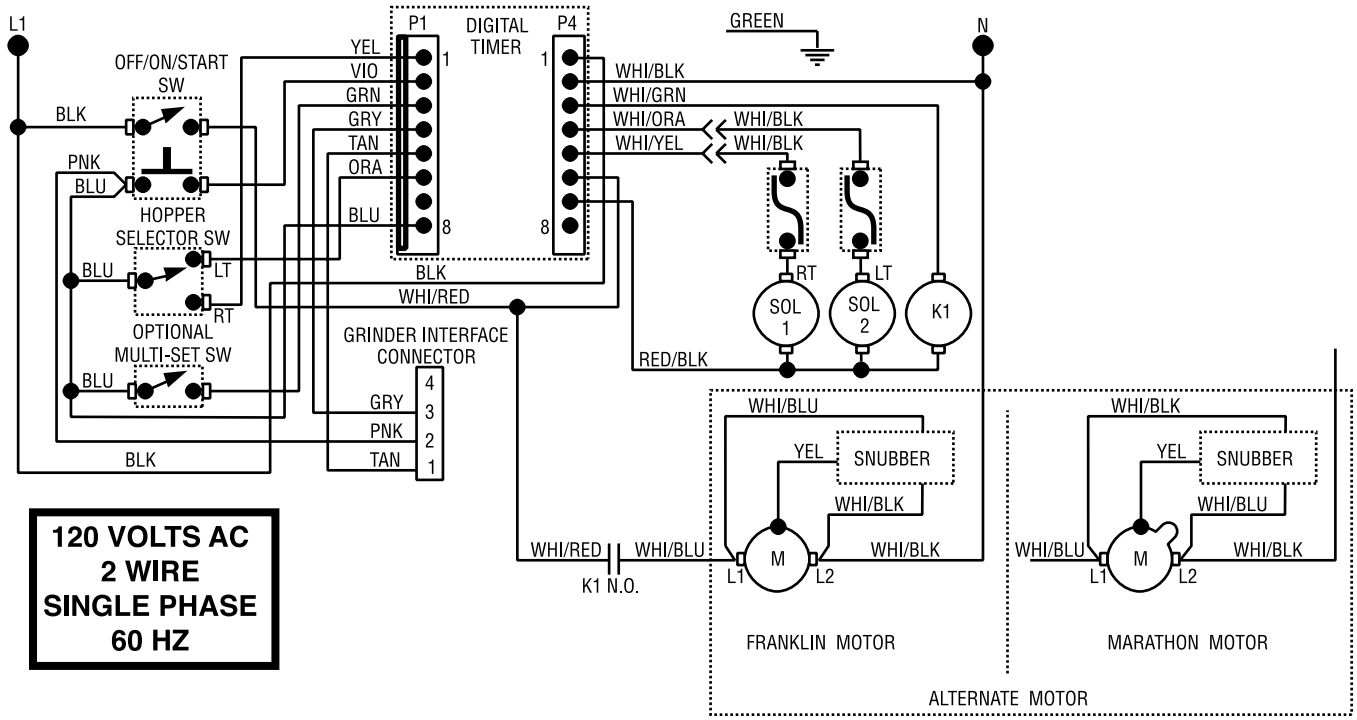

SCHEMATIC WIRING DIAGRAM G9-2 HD (ANALOG TIMER)

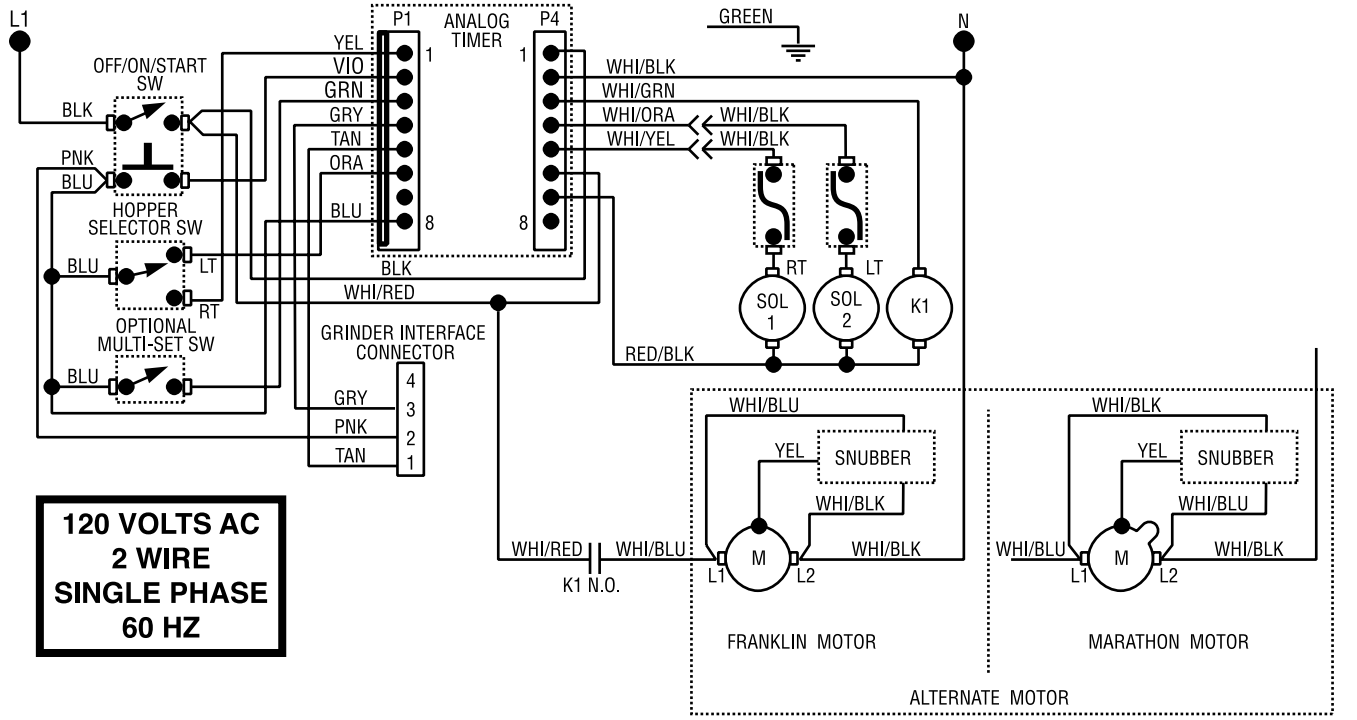

preliminary copy

WIRING DIAGRAMS

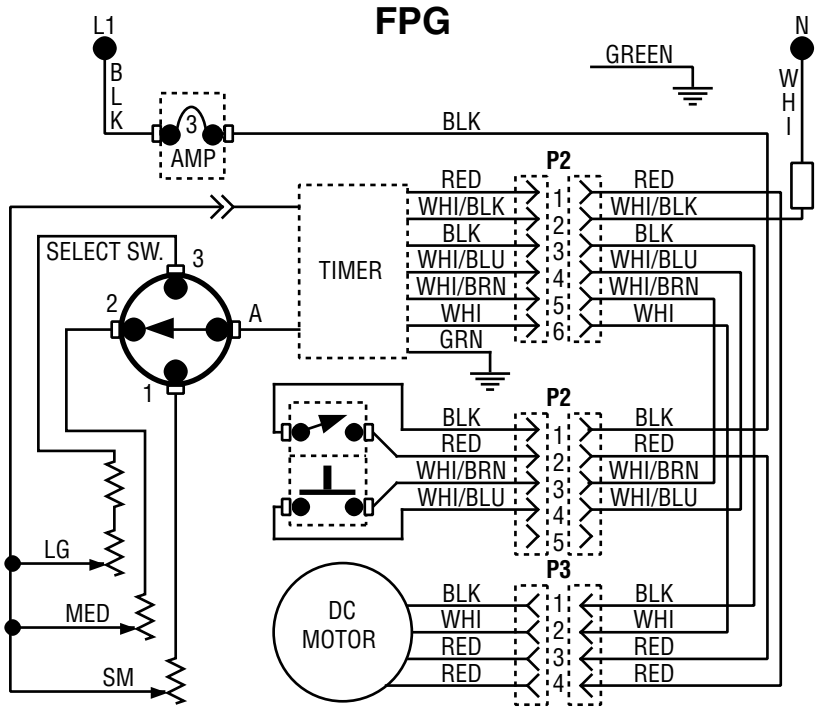

120 VOLTS AC
2 WIRE
SINGLE PHASE
60 HZ

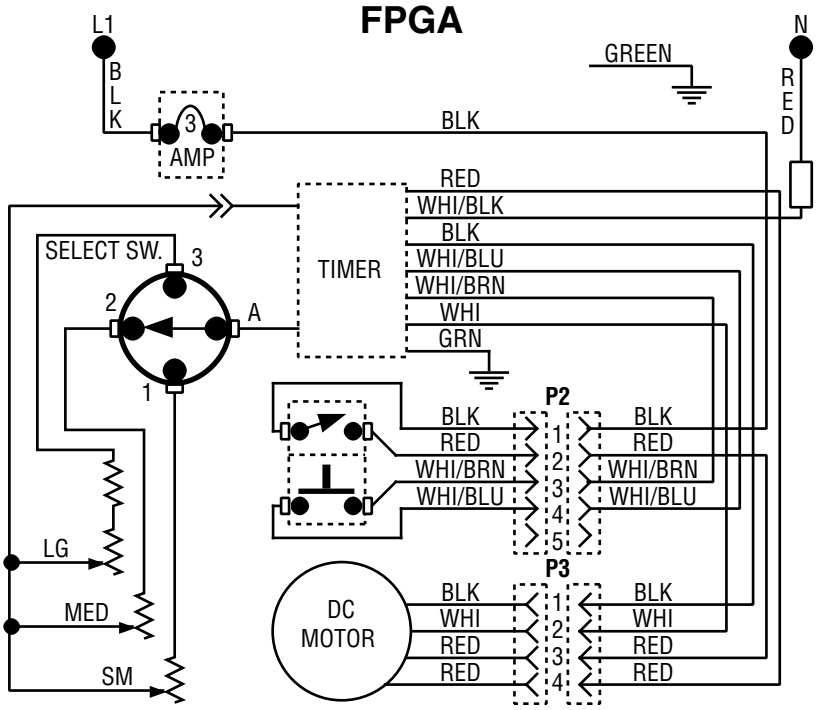

230 VOLTS AC
2 WIRE
SINGLE PHASE
50/60 HZ

preliminary copy