Champion®

The Dishwashing Machine Specialists

Project _____

Item No. _____

Quantity _____

D-H1T GAS HEATED DOOR-TYPE

STANDARD FEATURES

- **ENERGY STAR® Qualified**
- Dual NSF listing as a dishwasher and pot, pan, utensil washer
- Automatic tank fill
- Automatic drain valve
- Adjustable mode/time selector switch
- Door activated cycle start
- One gas heating system for boosting the final rinse and tank heat
- Low-water tank heat protection
- 2-Hp pump motor
- Stainless steel pump impeller
- Door safety switch
- Interchangeable upper and lower spray arms
- Vented wash chamber design
- Detergent/chemical connection provisions
- Single point electrical connection (see chart)
- Vent fan control switch

Gas

D-H1T

Gas Heated Door-type
Extended Hood
High Temperature Dishwasher

ENERGY STAR

c UL us

NSF

Dual Certified!

OPTIONS & ACCESSORIES

☐ Corner Model

☐ Drain Tempering Kit

SPECIFIER STATEMENT

Specified unit will be Champion Industries model D-H1T door type extended hood, gas tank heat, high temperature dishwashing machine.

Features include automatic tank fill, automatic drain valve, 2 Hp drip-proof pump motor, gas tank heat, interchangeable upper and lower spray arms, door activated start cycle, dual NSF Certified as both dishwasher and potwasher.

1 year parts and labor warranty.

Champion Industries, Inc.
3765 Champion Blvd., Winston-Salem, NC 27105
Tel: 336/661-1556 Fax: 336/661-1979
www.championindustries.com

CH079

(1M) 9/10 Printed in U.S.A.

Champion®

The Dishwashing Machine Specialists

Gas

D-H1T

Gas Heated Door-type
Extended Hood
High Temperature Dishwasher

Utilities

1	**Electrical Connection** **A** Machine connection (See Box) **B** Gas Booster connection requires 15 Amps @ 120/60/1
2	**Hot Water** 3/4" NPT hot water 140°F for 40°F rise booster. 3/4" NPT hot water 110°F for 70°F rise booster. Flow pressure 20-22 psi.
3	**Drain** **A** 2" OD machine connection **B** 3/4" NPT relief valve to open drain
4	**Natural Gas Connection** 40°F rise - 58,000 BTU/hr. 70°F rise - 105,000 BTU/hr. PMG-60 requires 1/2" NPT. PMG-100 requires 3/4" NPT.
5	**Gas Flue Exhaust** 4" Dia. Rear of booster

Note: The booster and machine come fully interplumbed complete with a blended phosphate water treatment system, pressure regulating valve, water hammer arrestor, ASME temperature and pressure relief valve, drain valve, circulator pump, and temperature gauges installed and ready for connection to your water supply.

Machine Load Amps			
Elec. Specs.	Rated Amps	Minimum Supply Ckt. Conductor Ampacity	Minimum Overcurrent Protective Device
208/60/1	15	20	20
240/60/1	14	20	20
208/60/3	8	15	15
240/60/3	7	15	15
480/60/3	4	15	15
575/60/3	3	15	15

Details, Dimensions & Connections

Length between table connections: **25-3/4"**
Shipping weight crated: **775 lbs.**

Dimensions shown in inches [mm]

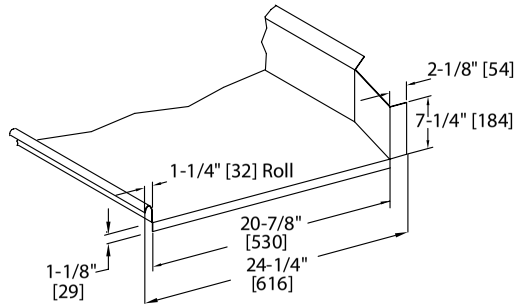

Typical Table Construction

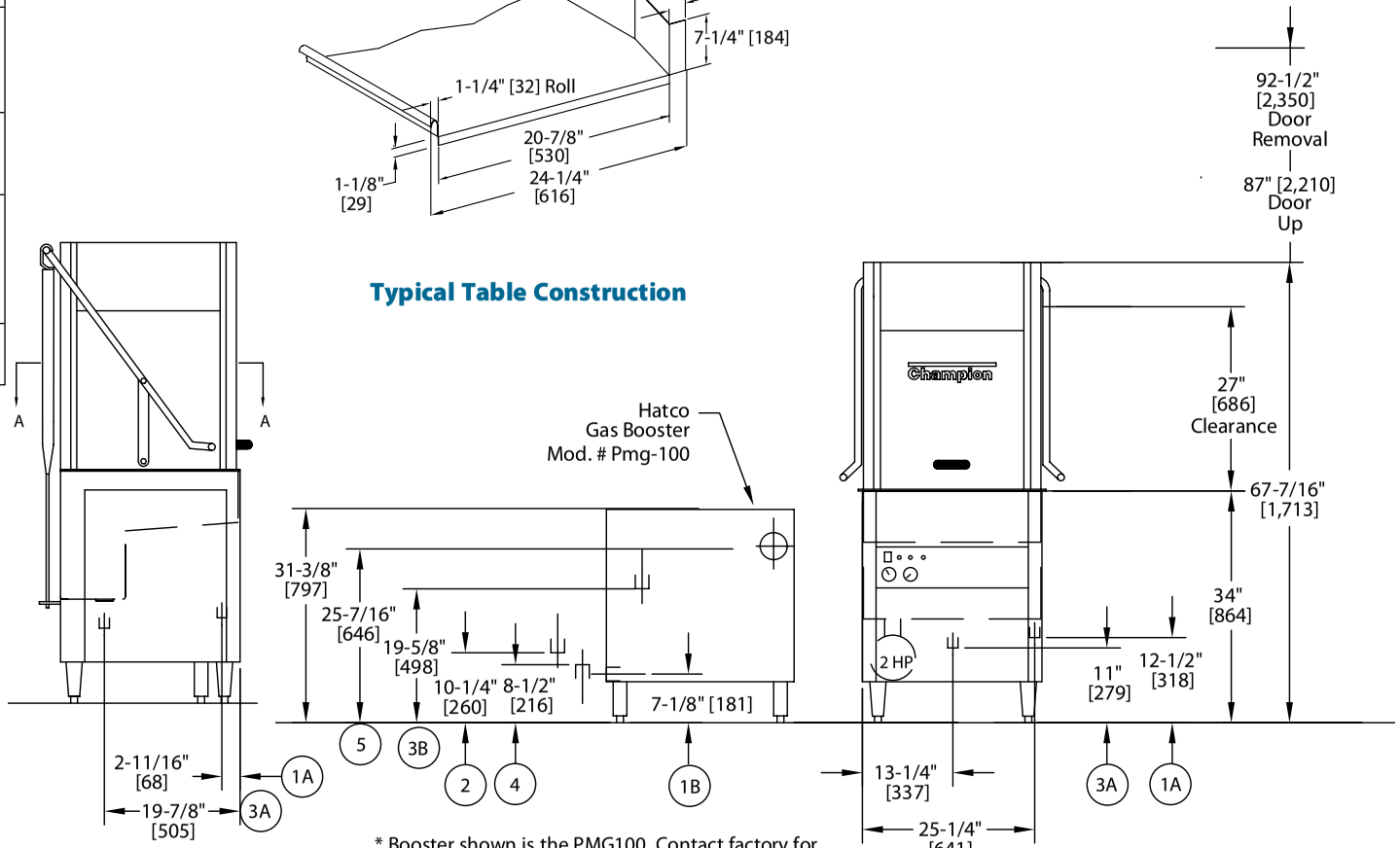

Side View

Front View

* Booster shown is the PMG100. Contact factory for PMG60 drawings & electrical information.

Champion®
The Dishwashing Machine Specialists

Gas

D-H1T

Gas Heated Door-type
Extended Hood
High Temperature Dishwasher

Dimensions shown in inches [mm]

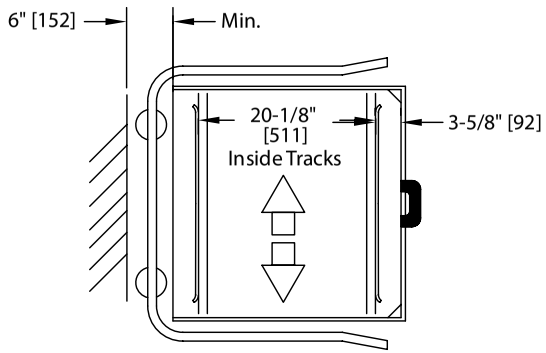

Straight-Through Operation

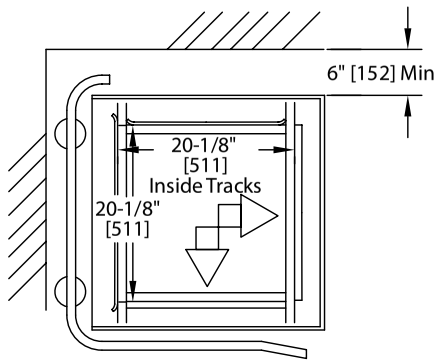

Corner Configuration

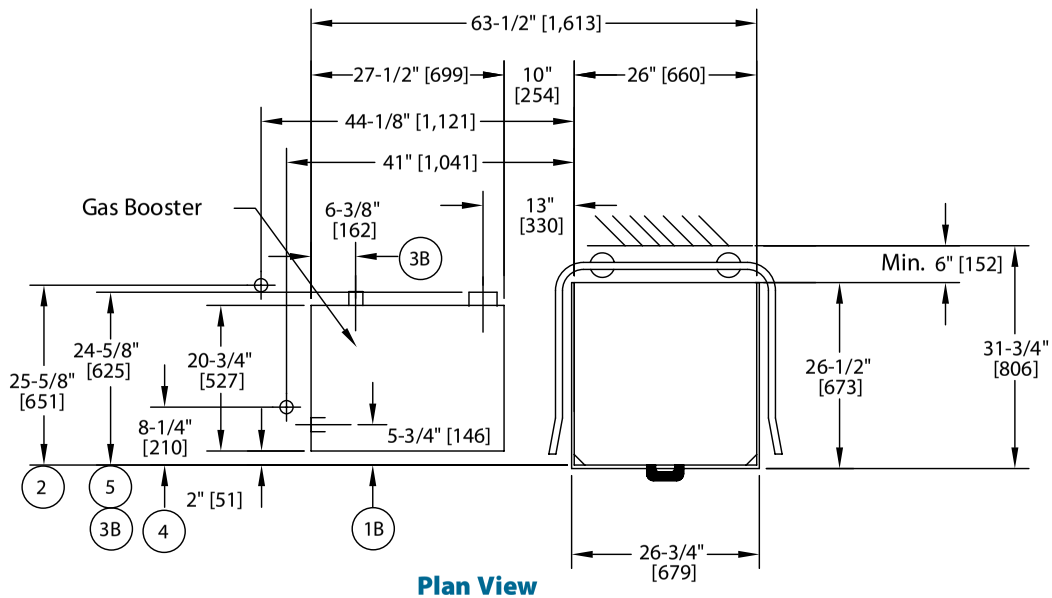

Plan View

SPECIFICATIONS

Capacities

Wash tank US gal.	9
Dishwasher Mode:	
NSF Rated Racks per hr.	49/29
Pot/Pan Washer Mode:	
NSF Rated Racks per hr.	19/10

Motor horsepower 2

Water consumption

	Pot/Pan Washer Mode	Dishwasher Mode
Gal. per rack US gal.	1.34	0.9
Gal. per hr. (max. use) US gal.	36	44

Temperature°F/°C

Wash	150/66
Rinse	180/82

Heating

GasPMG60	(40°F rise) 58,000 BTU/hr
PMG100	(70°F rise) 105,000 BTU/hr

Time Cycle in Seconds

Dishwasher Mode			Pot/Pan Washer Mode		
Wash	44	96	Wash	156	336
Rinse	10	10	Rinse	13	13
Dwell	14	14	Dwell	11	11
Total	68	120	Total	180	360

Warning: Plumbing and electrical connection should be made by qualified personnel who will observe all the applicable plumbing, sanitary and safety codes and the National Electrical Code.

Warning: Gas burner intake air and exhaust venting required in accordance with local codes. Exhaust must be vented outside.

Note: Specify vent location option on booster when ordering.

D-H1T GAS HEATED DOOR-TYPE

D-H1T

Gas Heated Door-type
Extended Hood
High Temperature Dishwasher

Champion®
The Dishwashing Machine Specialists

Gas

D-H1T Corner Unit Showing 90° Mounted Control Panel

Corner Configuration

'USGBC' and related logo is a trademark owned by the U.S. Green Building Council and is used by permission.
Due to an ongoing value analysis program at Champion, specifications contained in this catalog are subject to change without notice.

Champion Industries, Inc., 3765Champion Blvd., Winston-Salem, NC 27105 • 336/661-1556 • Fax: 336/661-1979 • www.championindustries.com