Champion®

The Dishwashing Machine Specialists

Project _____

Item No. _____

Quantity _____

P7-30 PULPER

P7-30

7.5 Hp - 30" Pulper
Waste Handling System

STANDARD FEATURES

- Flatware saver
- Flushing valve to pump-motor seal
- Flexible draw latches on feed tray assembly
- Remote mounted control box with overload indicator lights and circuit breaker
- Removable, gasketless water extractor door
- Start/stop switch mounted on extractor
- Stainless steel tubular bulletfeet legs
- 1-1/2" total adjustment
- Total stainless steel construction
- Water level control

OPTIONS & ACCESSORIES

- ☐ Anti-vibration feet for quieter operation
- ☐ Recirculating pump
- ☐ Multiple trough configurations
- ☐ Extractor flushing system
- ☐ Spray Reel - 30ft. unmounted
- ☐ Automatic shutdown timer
- ☐ Deodorizer injector
- ☐ Remote mounted start-stop station (unmounted)
- ☐ Multiple trough configurations (9" & 12")

SPECIFIER STATEMENT

Specified unit will be Champion model P7-30 Pulper waste handling system.

Features 7.5 Hp grinding motor with 30" diameter slurry chamber, flatware saver, four stationary blocks with four cutting surfaces each, two tool steel rotating shearing blades, large water extractor chamber with removable gasketless door and external drain handle. Constructed of Type 304 SST.

1 year parts and labor warranty.

Champion Industries, Inc.
2674 N. Service Road
Jordan Station, Ontario, Canada L0R 1S0
Tel: 800/263-5798 Fax: 905/562-4618

Champion Industries, Inc.
P. O. Box 4149, Winston-Salem, NC 27115
Tel: 336/661-1556 Fax: 336/661-1979
www.championindustries.com

CH062
(1M) 12/08 Printed in U.S.A.

Champion®
The Dishwashing Machine Specialists

P7-30 PULPER

7.5 Hp - 30" Pulper
Waste Handling System

P7-30 with Optional Recirculating Pump Mounted on Rear of Water Extractor

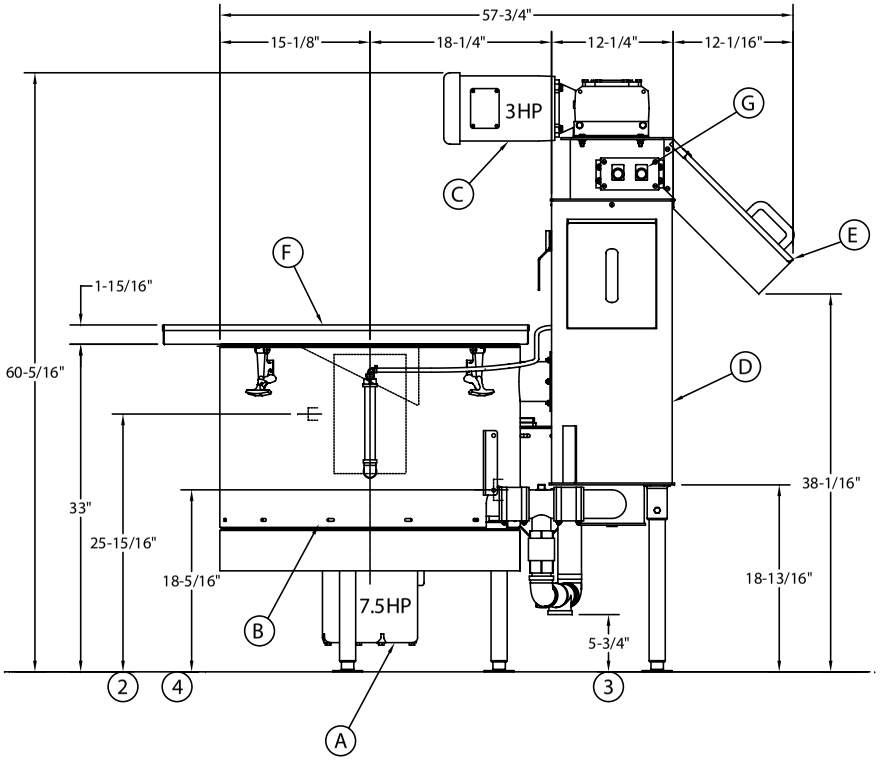

Front View

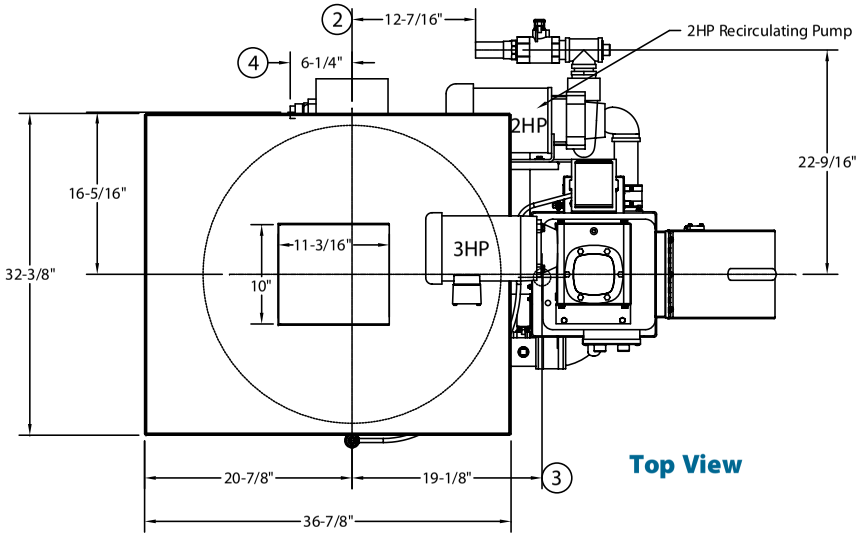

Top View

Remote Mounted Control Cabinet

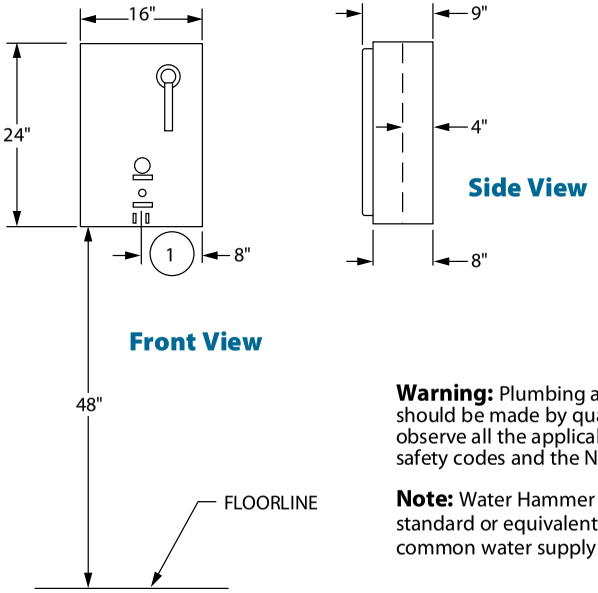

Side View

Front View

Utilities	
1	**Electrical** See Chart.
2	**Optional Recirculation Pump**
3	**Drain** 1-1/2" NPT.
4	**Cold Water** 1/2" NPT cold water connection.

Item	Qty.	Description
A	1	Slurry Chamber 30" dia.
B	1	Motor – Main Drive 7.5 Hp
C	1	Water Extractor Drive Motor 3 Hp
D	1	Water Extractor
E	1	Discharge Chute
F	1	Scrapping Tray
G	1	Start/Stop Station

Warning: Plumbing and electrical connections should be made by qualified personnel who will observe all the applicable plumbing, sanitary and safety codes and the National Electrical Codes.

Note: Water Hammer Arrestor (meeting ASSE-1010 standard or equivalent) to be supplied (by others) in common water supply line at service connection.

Champion®
The Dishwashing Machine Specialists

P7-30 PULPER

7.5 Hp - 30" Pulper
Waste Handling System

P7-30 with Optional Recirculating Pump Mounted on Front of Water Extractor

Volume crated: **99 cu. ft.**
Shipping weight crated: **1000 lbs.**
Dimensions shown in inches

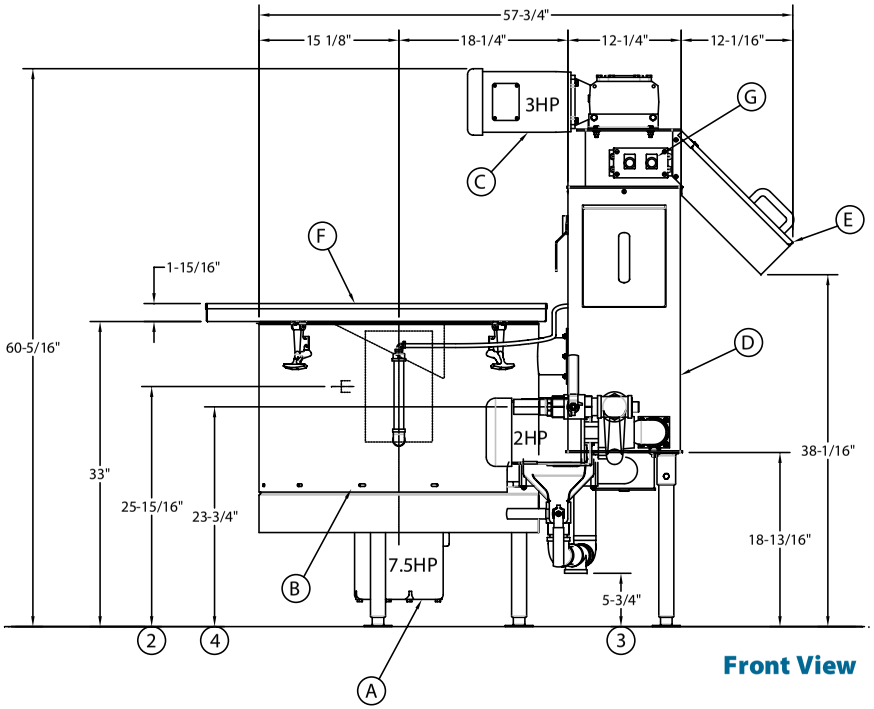

Front View

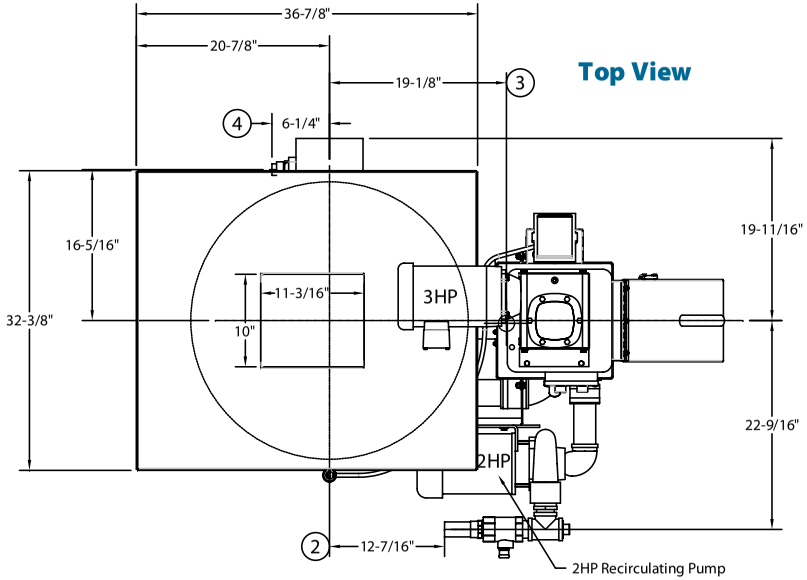

Top View

P7-30 w/out Recirculating Pump

Elec. Specs	Rated Amps	Minimum Supply Ckt. Conductor Ampacity	Maximum Overcurrent Protective Device
208/60/3	40	50	50
230/60/3	36	50	50
460/60/3	18	25	25

P7-30 w/2 Hp Recirculating Pump

Elec. Specs	Rated Amps	Minimum Supply Ckt. Conductor Ampacity	Maximum Overcurrent Protective Device
208/60/3	45	60	60
230/60/3	42	60	60
460/60/3	21	30	30

SPECIFICATIONS

Capacities Input	
Waste (approx. lbs. per hr.)	1000
Motor horsepower	
Pulper	7.5
Water Extractor	3
Slurry Chamber	
Tank (in. dia.)	30
Cutting Disk (in. dia.)	12
Connections	
Fresh water (in.)	1/2
Drain (in.)	1-1/2

Due to an ongoing value analysis program at Champion, specifications contained in this catalog are subject to change without notice.

Champion Industries, Inc., P. O. Box 4149, Winston-Salem, NC 27115 •336/661-1556 • Fax: 336/661-1979 • www.championindustries.com

P7-30

7.5 Hp - 30" Pulper
Waste Handling System

Champion®
The Dishwashing Machine Specialists

Sample Trough Configurations and Feed Methods

For additional trough configurations and feed methods, contact Factory

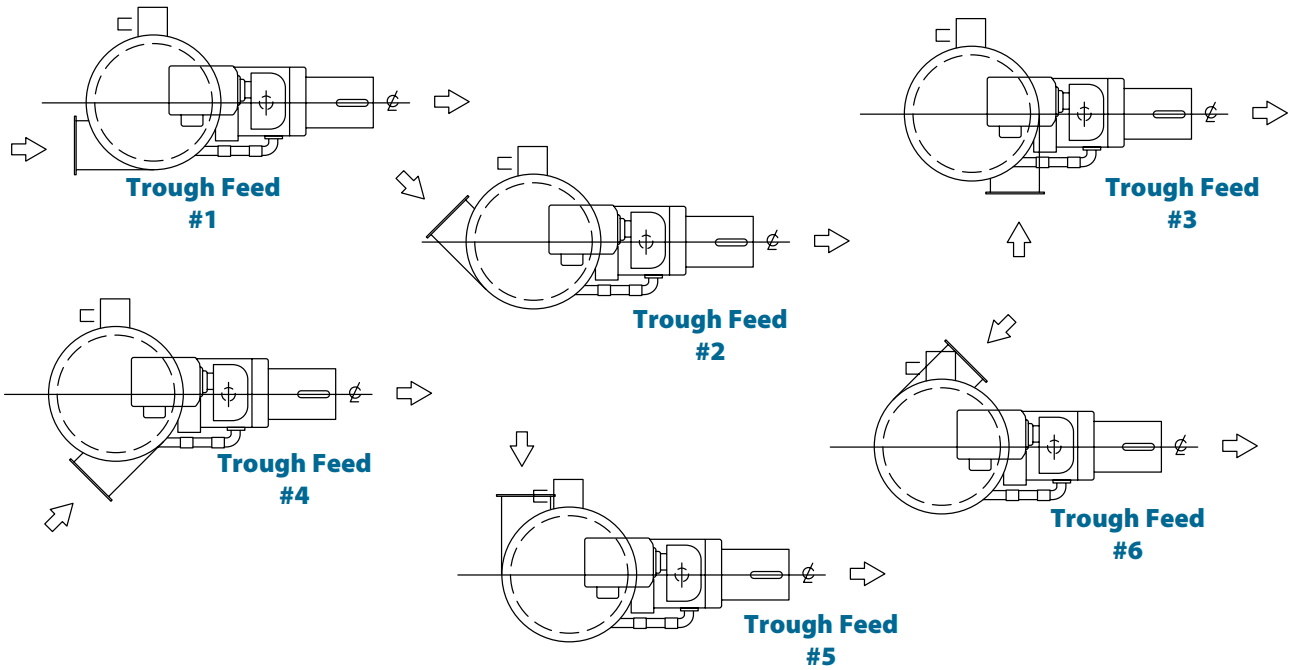

Feed Tray with Hood

Top View

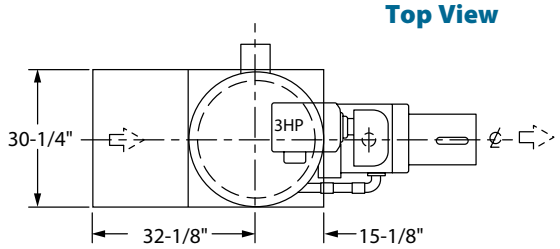

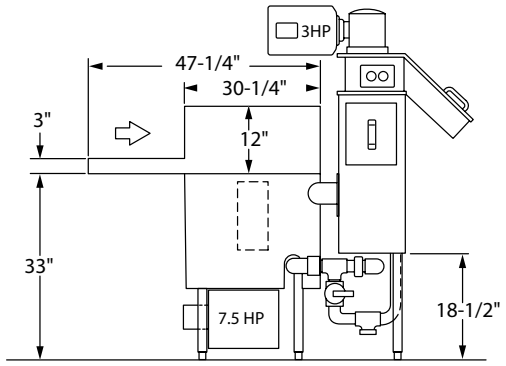

Front View

Under Table Feed Tray

Top View

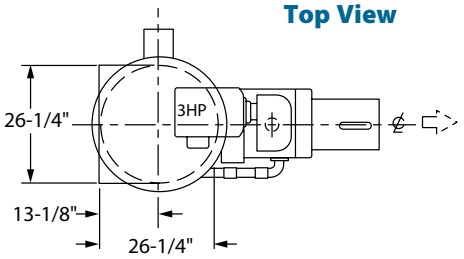

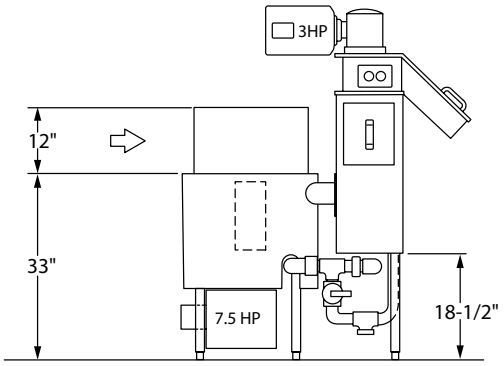

Front View

Due to an ongoing value analysis program at Champion, specifications contained in this catalog are subject to change without notice.

Champion Industries, Inc., P. O. Box 4149, Winston-Salem, NC 27115 • 336/661-1556 • Fax: 336/661-1979 • www.championindustries.com