# Champion®

The Dishwashing Machine Specialists

*For models beginning with Serial No. R3171*

Technical Manual

# E-Series Single Tank and Two Tank Rack Conveyor with/without Prewash

44

**Single Tank**

| | |
|---|---|
| 44 | 44DR |
| 54 | 44DRWS |
| 44LT | 66DRPW |
| 66LT | 66DRWSPW |
| 44WS | |
| 66PWWS | |
| 44 MODULAR | |

64

**Two Tank**

| |
|---|
| 64 |
| 72 |
| 84 |
| 64 MODULAR |

**Two Tank w/Prewash**

| | |
|---|---|
| 86PW | 94FFPW |
| 90FFPW | 108HDPW |
| 100HDPW | 106PW |
| 86PW MODULAR | 110FFPW |
| 94PW | 120HDPW |

66PW

**Single Tank w/Prewash**

| | |
|---|---|
| 66PW | 66DRPW |
| 70FFPW | 80DRHDPW |
| 80HDPW | 80DRWSHDPW |
| 66PW MODULAR | |
| 76PW | |
| 80FFPW | |
| 90HDPW | |

**Machine Serial No.**

**May, 2005**

**Manual P/N 113867 Rev D**


P. O. Box 4149
Winston-Salem, North Carolina 27115-4149
336/661-1556 Fax: 336/661-1660

2674 N. Service Road
Jordan Station, Ontario, Canada L0R 1S0
905/562-4195 Fax: 905/562-4618

Complete the information below so it will be available for quick reference.

Model Number _____ Serial Number_____

Voltage and Phase_____

Champion Service Agency_____ Phone_____

_____

Champion Parts Source_____ Phone_____

_____

Champion Service:

Champion (USA)
Phone: 1 (336) 661-1556
1 (800) 858-4477
Fax: 1 (336) 661-1660

Champion (Canada)
Phone: 1 (905) 562-4195
1 (800) 263-5798
Fax: 1 (905) 562-4618

We strongly recommend that you Fax your orders.

**NOTE:** When calling to order parts, be sure to have the model number, serial number, voltage and phase of your machine.

# REVISION HISTORY

| Revision Date | Revised Pages | Serial Number Effectivity | Comments |
|---|---|---|---|
| 07/15/04 | All | | First issue of manual and replacement parts |
| 08/31/04 | 7 | | Revised operation procedure. |
| 08/31/04 | 12 | | Revised the pump timer operation sequence. |
| 08/31/04 | 13 | | Revised the float switch inforamtion. |
| 8/31/04 | 14 | | Revised the terminal connections drawings and inserted figure number for electric booster. |
| 8/31/04 | 18 | | Added drive motor wiring drawings and information. |
| 09/01/04 | 20 | | Part number 328473 replaced by 328977. Added 36" Prewash panels. |
| 9/01/04 | 20, 23, 25 | R3448 | Added new door catch components. |
| 9/01/04 | 23 | | Part number 327890 relpaced by 328974. Added entrance and exit curtain baffles. |
| 9/01/04 | 25 | | Part number 327891 replaced by 328975. Added E84 front panels. |
| 9/01/04 | 31 | | Part number 328799 replaced by 328450. Added new cradle bracket for two tank machines. |
| 9/01/04 | 37 | | Updated part numbers for scrap screens and refuse baskets. |
| 9/01/04 | 61, 63 | | Updated part numbers for drain levers and overflow rod. |
| 9/01/04 | 64, 66 | | Corrected piping drawings. |
| 9/01/04 | 73 | | Changed part number 113727 discharge hose to 112807. |
| 12/16/04 | 51, 53, 77 | | Added 575 volt elements and corrected part number for 10KW element. |
| 2/16/05 | 91 | | Added revised schematics. |
| 5/16/05 | 91 | | Added revised schematics. |

# REVISION RECORD (CONT'D)

# CONTENTS



## LIST OF FIGURES

# CONTENTS (CONT.)

## LIST OF FIGURES

# LIMITED WARRANTY

Champion Industries Inc. (herein referred to as Champion), P.O. Box 4149, Winston-Salem, North Carolina 27115, and P.O. Box 301, 2674 N. Service Road, Jordan Station, Canada, L0R 1S0, warrants machines, and parts, as set out below.

**Warranty of Machines:** Champion warrants all new machines of its manufacture bearing the name "Champion" and installed within the United States and Canada to be free from defects in material and workman ship for a period of one (1) year after the date of installation or fifteen (15) months after the date of shipment by Champion, whichever occurs first. [See below for special provisions relating to glasswashers.] The warranty registration card must be returned to Champion within ten (10) days after installation. If warranty card is not returned to Champion within such period, the warranty will expire after one year from the date of shipment.

Champion will not assume any responsibility for extra costs for installation in any area where there are jurisdictional problems with local trades or unions.

If a defect in workmanship or material is found to exist within the warranty period, Champion, at its election, will either repair or replace the defective machine or accept return of the machine for full credit; provided, how ever, as to glasswashers, Champion's obligation with respect to labor associated with any repairs shall end (a) 120 days after shipment, or (b) 90 days after installation, whichever occurs first. In the event that Champion elects to repair, the labor and work to be performed in connection with the warranty shall be done during regular working hours by a Champion authorized service technician. Defective parts become the property of Champion. Use of replacement parts not authorized by Champion will relieve Champion of all further liability in connection with its warranty. In no event will Champion's warranty obligation exceed Champion's charge for the machine. The following are not covered by Champion's warranty:

a. Lighting of gas pilots or burners.
b. Cleaning of gas lines.
c. Replacement of fuses or resetting of overload breakers.
d. Adjustment of thermostats.
e. Adjustment of clutches.
f. Opening or closing of utility supply valves or switching of electrical supply current.
g. Cleaning of valves, strainers, screens, nozzles, or spray pipes.
h. Performance of regular maintenance and cleaning as outlined in operator’s guide.
i. Damages resulting from water conditions, accidents, alterations, improper use, abuse, tampering, improper installation, or failure to follow maintenance and operation procedures.
j. Wear on Pulper cutter blocks, pulse vanes, and auger brush.

*Examples of the defects not covered by warranty include, but are not limited to:* (1) Damage to the exterior or interior finish as a result of the above, (2) Use with utility service other than that designated on the rating plate, (3) Improper connection to utility service, (4) Inadequate or excessive water pressure, (5) Corrosion from chemicals dispensed in excess of recommended concentrations, (6) Failure of electrical components due to connection of chemical dispensing equipment installed by others, (7) Leaks or damage resulting from such leaks caused by the installer, including those at machine table connections or by connection of chemical dispensing equipment installed by others, (8) Failure to comply with local building codes, (9) Damage caused by labor dispute.

**Warranty of Parts:** Champion warrants all new machine parts produced or authorized by Champion to be free from defects in material and workmanship for a period of 90 days from date of invoice. If any defect in material and workmanship is found to exist within the warranty period Champion will replace the defective part without charge.

**DISCLAIMER OF WARRANTIES AND LIMITATIONS OF LIABILITY. CHAMPION'S WARRANTY IS ONLY TO THE EXTENT REFLECTED ABOVE. CHAMPION MAKES NO OTHER WARRANTIES, EXPRESS OR IMPLIED, INCLUDING, BUT NOT LIMITED, TO ANY WARRANTY OF MERCHANTABILITY, OR FITNESS OF PURPOSE. CHAMPION SHALL NOT BE LIABLE FOR INCIDENTAL OR CONSEQUENTIAL DAMAGES. THE REMEDIES SET OUT ABOVE ARE THE EXCLUSIVE REMEDIES FOR ANY DEFECTS FOUND TO EXIST IN CHAMPION DISHWASHING MACHINES AND CHAMPION PARTS, AND ALL OTHER REMEDIES ARE EXCLUDED, INCLUDING ANY LIABILITY FOR INCIDENTALS OR CONSEQUENTIAL DAMAGES.**

Champion does not authorize any other person, including persons who deal in Champion dishwashing machines to change this warranty or create any other obligation in connection with Champion Dishwashing Machines.

# SAFETY SUMMARY

## Safety Symbols

- The following symbols appear throughut this manual alerting you to potential hazards. Statements associated with each symbol are printed on *italics.*

WARNING:

Warning statements indicate any condition or practice that could result in personal injury or possible loss of life.

CAUTION:

Caution statements indicate any condition or practice which, if not strictly observed or remedied, could result in damage to or destruction of the dishwasher.

NOTE:

Note statements indicate any condition or practice which, if observed, will help in the safe completion of a task.

## General Safety Rules

- The following general safety rules must be observed in addition to the specific cautions and warnings presented in this manual.
- Your Champion pot and pan washer uses hot water to clean and sanitize a variety of wares. Machine surfaces and wares become hot during and immediately following normal operations. Operators should use caution when loading and unloading wares from the machine.
- Operators must NOT bypass a safety interlock or control(s) to operate unit.
- The service and maintenance instructions contained in this manual are intended for qualified service personnel. These instructions assume that you are trained in basic electricity and mechanical theory. If you are not a trained technician, then do not attempt to adjust or repair the dishwasher as serious personal injury or damage to the dishwasher may result.

# INTRODUCTION

Welcome to **Champion**....

and thank you for allowing us to take care of your dishwashing needs.

This manual covers several models. Model numbers are shown on the front cover.

Your machine has been completely assembled, inspected, and thoroughly tested at our factory before it was shipped to your installation site.

This manual contains:

- Warranty information
- Operation and cleaning instructions
- Maintenance instructions
- Troubleshooting guide
- Basic service information
- Replacement parts lists
- Electrical schematics

Complete and return your warranty registration card within ten (10) days after the installation of your machine.

All information, illustrations and specifications contained in this manual are based upon the latest product information available at the time of publication. **Champion** constantly improves its products and reserves the right to make changes at any time or to change specifications or design without notice and without incurring obligation.

For your protection, factory authorized parts should always be used for repairs.

Replacement parts may be ordered from your **Champion** authorized service agency. When ordering parts, please supply the model number, serial number, voltage and phase of your machine, the part number, part description, and quantity.

# GENERAL

This manual covers the Champion single tank and two tank rack conveyor dishwashing machines. These machines are fully automatic and are equipped with 1 HP prewash and 2HP wash and rinse pump motors (depending on the model) and a 1/6 HP conveyor drive motor. All models are available for a right-to-left or left-to-right operation.

These series of dishwashers are modular in design. The following models and options are covered in this manual:

## Model Numbers

Single Tank - Basic.....44, 54, 44 WS, 44 LT
Single Tank with 22" Prewash.....66 PW, 76 PW, 66 WS, 66 LT PW
Single Tank with 36" Prewash.....80 HDPW, 90 HDPW, 80WS HDPW
Single Tank with 26" Front Feed Prewash.....70 FFPW,80 FFPW, 70 WS FFPW

- The 44 and 54 basic models along with their respective prewash options, are high temperature (180°F/80°C final rinse) sanitizing models.

- The 44 WS models along with their respective prewash options, are water and energy saving, high temperature (180°F/80°C final rinse) sanitizing models.

- The 44 LT model, along with its respective prewash option, is a low temperature (140°F/60°C final rinse), chemical sanitizing model for use with sodium hypochlorite solution (chlorine bleach) as the sanitizing agent.

Two Tank - Basic.....64, 72, 84
Two Tank with 22" Prewash.....86 PW, 94 PW, 106 PW
Two Tank with 36" Prewash.....100 HDPW, 108 HDPW, 120 HDPW
Two Tank with 26" Front Feed Prewash.....90 FFPW, 98 FFPW, 110 FFPW

- The 64, 72 and 84 basic models, along with their respective prewash options, are high temperature (180°F/80°C final rinse) sanitizing models.

# INSTALLATION

## Unpacking

**CAUTION:**
*Care should be taken when lifting the machine to avoid damaging the piping under the base. Remove the dishwasher front panels and lift from the front with a forklift.*

1. Immediately after unpacking your machine, inspect for any shipping damage. If damage is found, save the packing material and contact the carrier immediately.
2. Remove the dishwasher from the skids. Adjust the feet if required, then move the machine to its permanent location. The machine should not be installed within 6 inches [153mm] of any wall or structure.
3. Level the machine by placing a level on top of the machine and adjust the feet. Level the machine by unscrewing the feet from the base. Adjust from the front-to-back and side-to-side.

## Plumbing Connections

**CAUTION:**
*Plumbing connections must comply with local sanitary and plumbing codes.*

1. Connect the hot water supply at the final rinse piping connection located behind the control cabinet at the top of the machine.
2. A “Y” strainer is provided by Champion for machines without booster. A pressure reducing valve (PRV) is provided by Champion for machines with built-in boosters.
3. If the incoming hot water supply pressure exceeds 25psi [173kPa] at machine, a PRV must be installed and set to 20-22psi [138-151 kPa]. The PRV may be purchased from Champion or supplied by others.
4. Install a manual shut-off valve in the steam and water supply lines to accommodate servicing the machine. The valve should be the same size as/or larger than the supply line.
5. Provide suitable gravity drain to connect to a 1-1/2" NPT drain pipe.

# INSTALLATION (CONT.)

## Electrical Connections

**NOTE:**
*Electrical and grounding connections must comply with the National Electrical Code and/or Local Electrical Codes.*

**WARNING:**
*When working on the dishwasher, disconnect the electric service and tag it to indicate work is being done on that circuit.*

**NOTE:**
***Electric boosters require a separate electrical connection (except the 44WS and 66 WS PW models that have a single point connection).***
*A fused disconnect switch or circuit breaker (supplied by user) is required to protect each power supply circuit.*

1. Compare the electrical specifications on the machine electrical connection plate (located inside the control cabinet) to the electrical power supply before connecting to the incoming service at a fused disconnect switch.
2. Motor rotation is set at the factory. Ensure proper rotation of the conveyor drive shaft (red arrow on side of motor shows direction of rotation). Single phase drive motor (208-240V only) rotation must be changed at the drive motor junction box. Three phase drive motor (480-575V) rotation must be reversed in the control cabinet. Reversing the pump motor(s) direction is done in the control cabinet by reversing the wires L1 and L2 on the disconnect switch side of the main electrical connection terminal block (refer to the electrical diagrams in the back of this manual).
3. A knock-out plug is provided at the rear of the control cabinet for electrical service connections.

**Figure 1- Motor Rotation**

## Ventilation

**CAUTION:**
*Exhaust air should never be vented into a wall, ceiling, or concealed space if a building as condensation will cause damage.*

1. Stainless steel watertight ducting should be installed **INSIDE** the 4" x 16" [102mm x 407mm] vent stacks at the load and unload ends. A minimum of 6 air changes per hour of kitchen air is recommended. The typical exhaust ventilation requirements for a rack machine using a 180°F/82°C final rinse are:
   - The load end requires 150 CFM @ 1/4" (SP), [71 Liters/Sec] with prewash.
   - The load end requires 200 CFM @ 1/4" (SP), [95 Liters/Sec] without prewash.
   - The unload end requires 400 CFM @ 1/4" (SP), [189 Liters/Sec].
2. An adjustable damper is supplied with the optional vent stacks for regulating the exhaust volume.

# INSTALLATION (CONT.)

## Chemical Connections

1. Use a qualified detergent/chemical supplier for detergent/chemical and dispensing equipment needs.
2. Labeled detergent control circuit connection terminals are provided in the control cabinet for detergent and rinse agent/sanitizer dispensing equipment (supplied by others).
3. The illustration on the right, shows the terminal board for the current production machines . The signal connection points include:
   - Detergent signal 120VAC, 1Amp max amp load
   - Rinse aid/Sanitizer signal 120VAC, 1Amp max amp load
4. A removable black plug is provided in the load end side of the wash tank (behind the drive motor) for installation of the detergent conductivity cell.

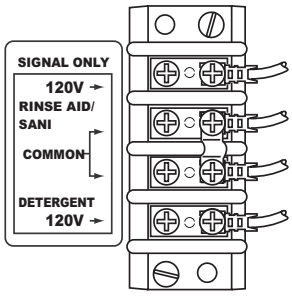


**Chemical Connection Terminal Board**

## Curtain Locations

1. Refer to the illustrations below and hang the curtains as shown.
   J-hooks are located in the corners of each section to accept the curtain rods.
   - Standard long curtains 24" x 20-1/4" [610mm x 515mm]
   - High hood long curtains 24" x 22-3/4" [610mm x 578mm]
   - Standard short curtains 24" x 13-/14" [610mm x 337mm]
   - High hood short curtains 24" x 20-1/4" [610mm x 515mm]
   - Final rinse curtain 24" x 6-1/4" [610mm x 159mm]
2. Make sure the that the short flaps of the curtains face the load end of the dishwasher.
   The longest curtains always go on each end of the dishwasher.

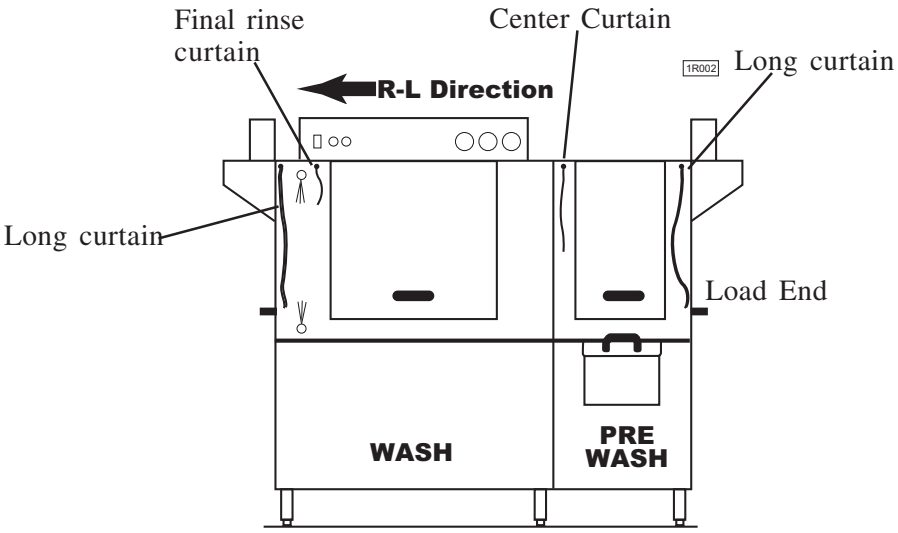


**Curtain Locations (machine with prewash shown)**

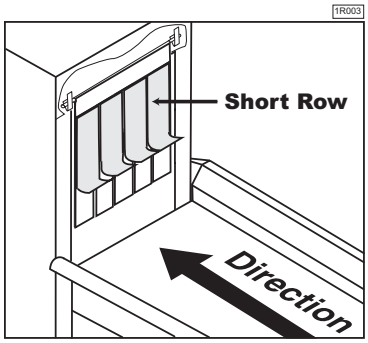


*Short row of curtains face out to the load end (or unload depending the location of the curtain) of the dishwasher.*

# INSTALLATION (CONT')

## Completing Installation

**WARNING:**
*Do not insert racks into the machine before the tanks fill with water and have reached the proper temperatures. Operating the pumps dry will cause pump seal damage and leakage that can result in a motor failure.*

1. Remove any foreign material from inside of the machine.
2. Check to insure that the drains/overflow pipes are operational and sealed.
3. Position scrap screens on the supports above the tanks.
4. After all plumbing and electrical connections are completed, fill the tank and wait 10 minutes.
   Check all plumbing connections for leaks.
5. Drain the tank and check the drain lines for leaks.
6. The formed down lip of the dishtable should be placed inside of the machine. The dishtable should be pitched toward the dishwasher for proper draining by adjusting its leveling feet. The dishtable should be sealed to the dishwasher.

# OPERATION

Follow the procedure below to operate your dishwasher properly.

1. Verify that the spray pipes, curtains, and scrap screens are in place and clean.
2. Verify that the overflow drains are closed.
3. Turn on the detergent dispenser switches and check the detergent supply.
4. Turn on the exhaust vent system (if applicable), and make sure it is operating.
5. Close the door(s). Push the power switch ON, light will illuminate. Machine will begin to fill (with or without a booster, machine fills thru the fill valve and through the final rinse).
6. When the tanks are full, wait until the wash tank has reached the proper temperature. Check the wash tank temperature gauges located on the control cabinet. Minimum wash temperatures are:
   - 44 LT, 66 LT PW - **140°F/60°C**
   - 44, 54, 44 WS - **150°/66°C**
   - 66 PW, 76 PW, 66 WS PW - **160°/71°C**
7. Press the Green Lighted **START** Pushbutton on the control cabinet. This will activate the automatic operation for the drive motor and the pumps. The green light will come on. No other noticeable action will happen until the first rack is loaded into the machine.
8. Scrap and pre-flush all items to be placed and load items into racks.

**NOTE:**
***DO NOT OVERLOAD RACKS.***

Pegged racks are for plates and/or trays. Flat racks are for bowls and/or silverware. Spread silverware evenly in a single layer in a flat rack or upright (loosely packed) in a cutlery rack/cylinder.

9. Push the rack into the machine, the conveyor and drive system will grab the rack and pull it into the machine. The rack start lever (idle pump switch) will start the pumps and the system will run a cycle for 90 seconds. When another rack is inserted it resets the pumps for another 90 second cycle.
10. Check the final rinse pressure and temperature as the racks pass through the final rinse. This final rinse pressure **MUST** be 20-22 psi [138-151 kPa] and the final rinse temperature **MUST** be a minimum of 180°F/82°C .
11. The pumps and the conveyor drive will automatically stop after the last rack leaves the machine and the 90 second cycle time has completed.
12. The machine may be stopped at any time during the cycle by pressing the red **STOP** pushbutton on the control cabinet. The green light will go off on the green **START** pushbutton, the power is removed from the idle pump circuit but the heaters and fill remain on. To restart, push the green **START** pushbutton to reset the automatic cycle. Insert another loaded rack to start the idle pump switches. When the rack that was inside of machine has exited, reinsert that rack back into machine to make sure that the complete sanitation cycle of the original rack has been completed.

# OPERATION (CONT')

13. The machine may also be stopped at any time during the cycle if the door(s) are raised. When the door is raised the light on the green START pushbutton goes off. The power is removed from the idle pump switch and the heat circuit. To reset the unit, close the door(s) follow the same procedure as in step 12. Push the green **START** pushbutton to reset the automatic cycle. Insert another loaded rack to start the idle pump switches. When the rack that was inside of machine has exited, reinsert that rack back into machine to make sure that the complete sanitation cycle of the original rack has been completed.
14. CLEAN the scrap screens and scrap baskets (if necessary) and REPLACE the tank water after each meal period or every 2 hours of operation. Check the chemical supply.

**CAUTION:**
***DO NOT*** *allow racks to remain on unload dishtable. This could cause the conveyor to jam and may damage the machine. The installation of a table limit switch is highly recommended and will reduce the risk of damage.*

**CAUTION:**
***DO NOT*** *leave water in the tanks over night.*

# MAINTENANCE

The efficiency and life of your machine is increased by regularly scheduled preventive maintenance. A well maintained machine gives better results and service.

The best maintenance you can provide is to keep your machine clean. Components that are not regularly cleaned and flushed will clog and become inoperative.

Intervals shown in the following schedules represent an average length of time between necessary maintenance. Maintenance intervals should be shortened whenever your machine is faced with abnormal working conditions, hard water, or multiple shift operations.

## Maintenance Schedule

### Cleaning

- **Daily/Every 2 Hours of Operation**

1. Turn power switch to **OFF**.
2. Pull drain lever(s) to drain water. Remove scrap screens and scrap baskets (internal and external ,if applicable). Clean inside of the tanks and flush with clean water. Back flush the scrap screens until clean. (See Figs 2 & 3)

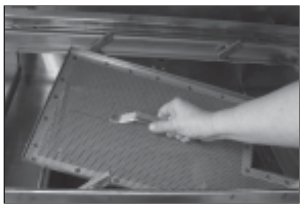

**Figure 2-**
**Scrap Screen Removal**

**Figure 3-**
**Scrap Basket Removal**

**NOTE:**
*DO NOT strike or bang screens or baskets against solid objects*

3. Remove the spray pipes (Figs. 4-6) Remove the end cap from each spray pipe (Fig. 7). Flush the pipes and nozzles until clean.

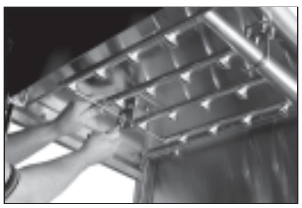

**Figure 4-**
**Unhooking Upper Arm**

**Figure 5-**
**Upper Wash Arm Removal**

**NOTE:**
*DO NOT strike or bang wash pipes against solid objects*

Replace the end caps and verify the rubber o-rings are in place. Reinstall the spray pipes.

4. Remove and clean the curtains. Hang them off the dishtable and allow them to dry at the end of the day.
5. Leave the doors open between operations, allowing the machine to dry.
6. Verify that the final rinse nozzles are clean and free of any internal hard water deposits. If necessary, clean the nozzle orifices with a small paper clip. Consult your chemical supplier for proper use and the kind of deliming chemicals needed.
7. Report any unusual conditions to your supervisor.

**Figure 6-**
**Lower Wash Arm Removal**

- **As Required**

1. Check the temperature and pressure gauge readings
2. Inspect the machine and check the pump motor for any leaks around the shaft
3. Check the chemical supplies and refill as necessary.

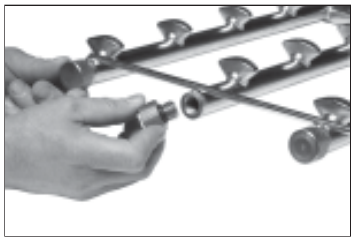

**Figure 7-**
**End Cap Removal**

# MAINTENANCE (CONT')

- **Weekly**

1. Inspect all water lines for leaks and tighten at joints if required.
2. Clean all of the detergent residue from the exterior of the machine.
3. Check the drain/overflow tube for any leaks,
4. Clean the accumulated scale from the heating element.
5. Remove and closely inspect each spray arm for blockage.
6. Straighten a small paper clip to clear each final rinse nozzle.
7. Inspect the pawl bar and drive assembly for wear and freedom of travel.
8. Check the float switch(es) in the tank(s) for freedom of travel.
9. Check the idle pump(s) and final rinse lever for freedom of travel.

## Deliming

Your dishwasher should be delimed regularly as required. This will depend on the mineral content of your water.

Inspect your machines interior for lime deposits. If required, consult your chemical supplier for the proper type and procedures on deliming agents.

If you have a chemical sanitizing model 44 LT or 66 LT PW, **CAREFULLY** follow the procedure below before deliming:

**DANGER:**
*Deliming solution, rinse agents or other acids must not come in contact with household bleach (sodium hypochlorite) or any chemicals containing chlorine, iodine, bromine, or fluorine. Mixing may cause hazardous gases to form. Consult your chemical supplier.*

1. Remove the suction tube assembly from the bleach container and place it as close as possible to the floor. Place a catch pan underneath it.
2. Cycle the machine approximately six times to purge the lines of the bleach.
3. Proceed with the deliming procedures.

# ELECTRICAL SERVICE

## Fuse Blocks - 120VAC Control Voltage

Two fuse blocks, located in the center of the front of the main control cabinet, protect the main control transformer. Each fuse block holds one fuse. The fuses are marked 1FU and 2FU on the electrical schematic.

### To replace the fuse:

- Disconnect the power to the machine at the main service switch.
- Remove the fuse and replace it.
- Turn the main power on.
- If the fuse blows again, DO NOT INCREASE THE FUSE SIZE.
- DETERMINE THE CAUSE OF THE OVERLOAD.

Fig. 5 shows the fuses and fuse blocks.

**Figure 8-**
**Fuse Blocks**

## Motor Overloads

Motor overloads are located to the left of the fuse block inside the control cabinet. Each motor has
one overload to protect it from line voltage electrical overloads. In addition, an auxiliary set of switch contacts is attaches to the overload. The switch contacts disconnect 120VAC power to the motor contactor coils in the event of an overload condition. Refer to Fig.6.

### Note the Switch Lever on the Overload

- If the red OFF switch lever is down with the "OFF" showing then the overload has tripped on an overload.

### To Reset the Motor Overload:

- Push the start switch down with "ON" showing.
- Run the dishwasher and test the AMP draw of the motor in question. If the motor checks ok then there may be a wiring problem or the overload may be defective.

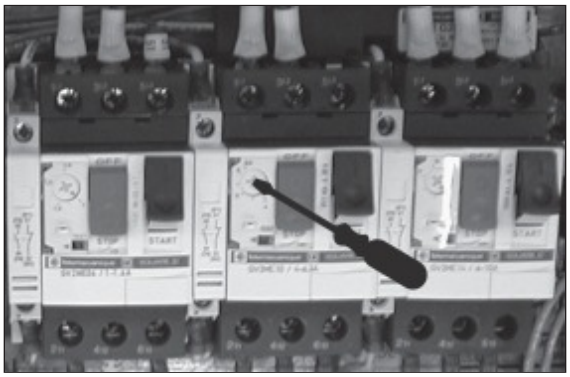

**Figure 9-**
**Motor Overload**

### To Replace a Motor Overload:

- Disconnect the wires to the overload.
- Pull forward and lift out.
- Snap the new overload into place and reconnect the wires.

### To Adjust the Overload Setting:

The screwdriver in Fig. 6 is positioned to adjust the motor overload AMP setting.

- Read the FLA motor amps that applies for the machine voltage on the Motor Nameplate.
- Flip up the plastic cover. Turn the setting to match the nameplate FLA.

# ELECTRICAL SERVICE (CONT')

## Pump Timer

The automatic timer located in the left center of the control cabinet is preset at the manufacturer.

The Pump Timer controls the amount of time that the pump(s) and the drive motor will run after the last rack enters the load end of the dishwasher tunnel.

The Pump Timer is an OFF DELAY timer. One timer controls all pumps no matter what the model it may be. Cycle time is 90 seconds.

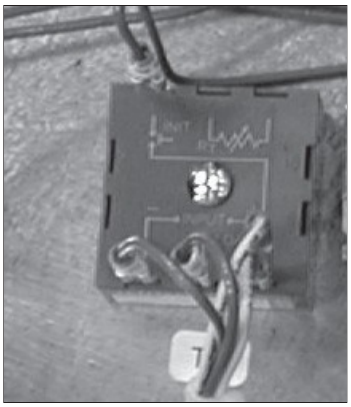

**Figure 10-**
**Pump Timer**

## To Replace a Timer:

- Disconnect the power to the machine at the main service switch.
- Remove the wires connected to the timer. Remove the screw in the center of the timer.
- Remove the defective timer and install the replacement.
- Reinstall the screw and reinsert the wires.

## Operation Sequence:

- A dishrack entering the machine contacts the idle pump switch lever.
- The contacts of the idle pump switch open, de-energizing control relay 1CR.
- Normally closed contacts of 1CR close and apply a signal to pump timer. The timer contacts close turning on the pump(s) and drive motor.
- The dishrack moves off the idle pump switch lever and the switch contacts close.
- 1CR energizes and the notmally closed contacts open removing the signal from the pump timer.
- The pump timer begins to time down for its 90 seconds time setting.
- The timer is reset each time the idle pump switch is activated. If the timer is reset only once it will time out and shut the pump(s) and drive motor off after the time delay.

## To Check the Pump Timer Setting:

## Use a stop watch to check the timing cycle.

- Turn the power on.
- Press the green lighted START pushbutton.
- Place a rack in to the conveyor.
- When the rack enters the load end, the pump(s) and the drive motor will start.
- Start the stop watch when the rack clears the idle pump switch. Stop the stop watch when the machine stops. The lengthof the cycle should be 90 seconds +/- 2 seconds. If the timer is not within this range replae the timer.

# ELECTRICAL SERVICE (CONT')

## Automatic Fill/Low Water Heat Protection

### Dual Float Switches

Each tank contains a dual float switch (see Fig.8). The device consists of an angled stem containing two reed switches. Two stainless steel ball floats, containing magnets, slide over the stem and are free to move up and down. When the float moves on the stem, it opens and closes the associated reed switch inside the stem. The reed switches control relays. The relays control the automatic fill and heat for different parts of the machine. The float switch(es) and their relay(s) operate on a 120V circuit.

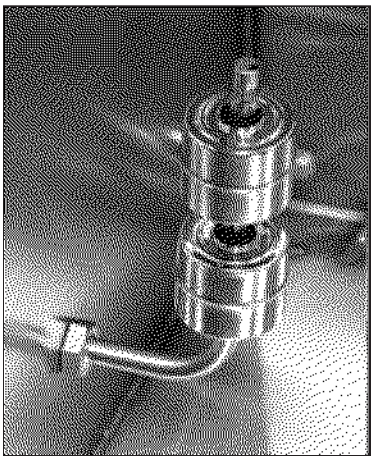

**Figure 11-**
**Dual Float Switch**

### Circuit Explanation

Refer to the electrical schematic on your machine for a detailed description of the individual float(s), relay(s) and wiring.

### Bottom Float and Reed Switch

- The bottom float controls the heat.
- When the bottom float is down, the bottom reed switch contacts are open.
- When the bottom float is up, the bottom reed switch contacts are closed.

### Top Float and Reed Switch

- The top float controls a fill valve, which controls the water level.
- When the top float is down, the top reed switch contacts are open.
- When the top float is up, the top reed switch contacts are closed.

### Initial Fill

- When the tank is completely empty, both floats are down and their reed switch contacts are open.
- The control relay for the float switch is de-energized.
- The fill valve for the tank is energized and the tank begins to fill with water.
- As the water level in the tank rises, the bottom float begins to move up.
- When the bottom float is completely up, its reed switch contacts close.
- This prepares the heat circuit, but the heat **DOES NOT** energize at this time.
- The tank continues to fill until the top float is completely up.
- The top float's reed switch contacts close. Its control relay energizes.
- The fill valve de-energizes.
- The heat circuit energizes through the contacts of the control relay.

### During Normal Operation

- If the water level in a tank falls below the level of the top float, the top float moves down and its reed switch contacts open.
- When the water level falls below the level of the bottom float, the bottom float moves down and its reed switch opens.
- The control relay de-energizes. The fill and rinse valve energizes and refills the tank.
- The heat circuit will de-energize until the water level in the tank raises the top float again.
- The bottom float keeps the heat circuit ready as long as the water level is above the level of the bottom float.

# ELECTRICAL SERVICE (CONT')

## Thermostat Locations and Adjustments

**Electric tank heat** is controlled by two thermostats.

1. The control thermostat which regulates the electric tank heat temperature.
2. The high limit thermostat which protects the tank from overheating.

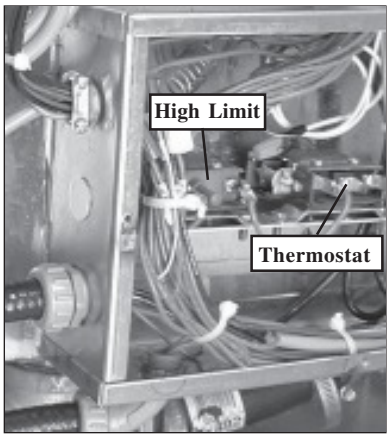


**Figure 12-**
**Tank Heat Thermostats**

### Location

Both thermostats are located on the front of the tank, inside of a heater box enclosed in a stainless steel panel, behind the front access panel.

### Adjustment

**The Control Thermostat** has an adjustment screw.

- The thermostat is wire Normally Closed.
- Turn the adjustment screw clockwise to increase the temperature in the tank and counterclockwise to decrease the temperature in the tank.

**The High Limit Thermostat** is not adjustable. It contains a red reset button on its center.

- The red button pops out if the temperature in the tank exceeds 210°F/99°C.
- Press the red button in to reset the high limit.
  **DETERMINE THE CAUSE OF THE HIGH TEMPERATURE CONDITION.**

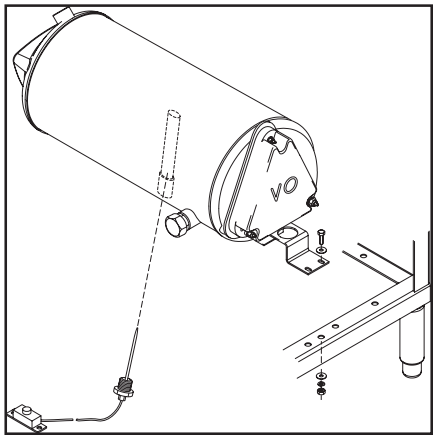

**Figure 13-**
**Booster Thermostat Location**

Refer to Fig 13 & Fig 14

**Electric Booster Heat** is controlled by two thermostats.

1. The control thermostat regulates the temperature.
2. The high limit thermostat protects the booster from overheating.
3. Each tank has a control and a high limit thermostat.

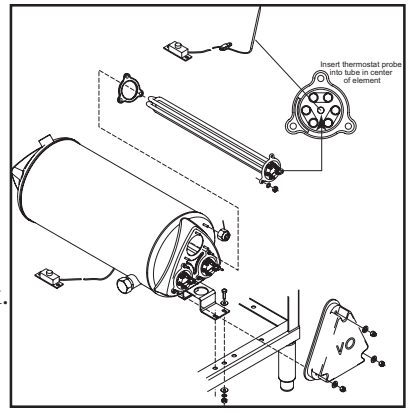


**Figure 14-**
**Booster High Limit Thermostat**

### Location:

**The control thermostat** is in the junction box on the wash tank.

- The thermostat is wire Normally Closed.
- Turn the adjustment screw clockwise to increase the booster tank temperature and counterclockwise to decrease the booster tank temperature.

**The high limit thermostat** is also in the junction box on the wash tank.

- A red button that pops out when the temperature exceeds 210°F/99°C.
- Press the red reset button to reset the high limit.
  **Determine the cause of the high limit temperature condition.**

# ELECTRICAL SERVICE (CONT')

## Heater Element Wiring-Booster Tank and Wash Tank Heater Elements

Refer to the illustrations and follow the steps below to properly install terminal jumpers and to make line power connections to a replacement element.

**Step 1.** Hold the element assembly with the calrod coils facing toward you.

**Step 2.** Match your element coils to Configuration A or B

**Step 3.** Rotate your element coils to match the correct configuration.

**Step 4.** Flip the element over and match your element to the correct terminal configuration.

**Step 5.** Install the terminal jumpers according to the illustrations for your voltage requirement.

**Step 6.** Install the element and make your line connections 1L1, 1L2 or 1L3 per the illustration.

**Step 7.** If installing a booster element (that requires the limiting thermostat), the limiting thermostat should be inserted into the center of element. Thermostat should bottom out in the tube approximately 12" deep. The exposed capillary leads should be routed under the booster cover and fastened to the stud in the upper right side of the booster can with the clip and nut. See Figure 43 Electric Booster in Replacement Parts section.

### Configuration A

Booster tank element
View of calrod coils

### Terminal Connections view of element

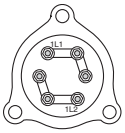


208V/1 Phase

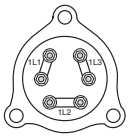


208-240V/3 Phase
Delta Connection

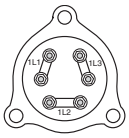


480V/3 Phase
575V/3 Phase
Delta Connection

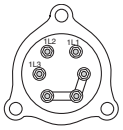


208-240V/3 Phase
Wye Connection for
380-415V/3 Phase

### Configuration B

Wash tank element
View of calrod coils

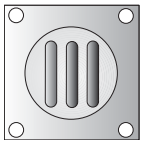

### Terminal Connections view of element

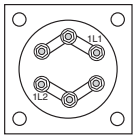


208V/1 Phase

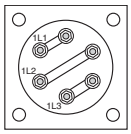


208-240V/3 Phase
Delta Connection

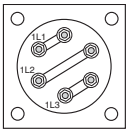


480V/3 Phase
575V/3 Phase
Delta Connection

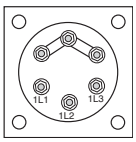


208-240V/3 Phase
Wye Connection for
380-415V/3 Phase

# ELECTRICAL SERVICE (CONT')

## Electric Booster Heater- Element Installation

Champion built-in boosters are constructed of stainless steel and have locations for three electric booster heater elements. There are three booster configurations for the rack conveyor models:

40°F/22°C rise booster (minimum of 140°F/60°C incoming water)
60°F/34°C rise booster (minimum of 120°F/49°C to 140°F/60° incoming water)
70°F/39°C rise booster (minimum of 110°F/43°C incoming water)

The canisters and total Kw ratings of the booster assemblies are determined by the model number of the machine and the minimum temperature of the incoming water supply that the end user is able to supply to the machine. Machines can be supplied with 40°F/22°C rise booster or 60°F/34°C rise booster which use only one canister (nested boosted) with separate electrical connections. The 70°F/39°C rise models use two canisters in the booster assemblies, these also have separate electrical connections.

Water Saver (44 WS and 66 WS PW) models are supplied in only 40°F/22°C or 70°/39°c rise booster assemblies. These are single canister units in either option and are not separate electrical connections.

# ELECTRICAL SERVICE (CONT')

## Motors-Pump

Voltage: Standard motors are multi-voltage
Low voltage: 208-230VAC
High voltage: 460VAC or 575VAC

Phase: Motors may be single or three phase.

### Wiring Connections

Refer to the diagrams below for three phase motor lead wiring.

**Low voltage 208-230V/3PH**

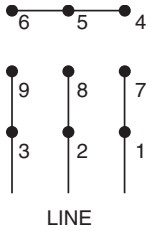


**High voltage 460V/3PH**

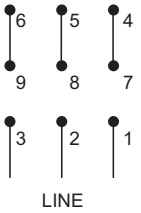


**575V/3PH Only**

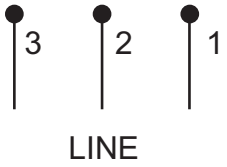


Refer to diagram at right for single phase motor lead wiring.

**Low voltage 208-230V/1PH Only**

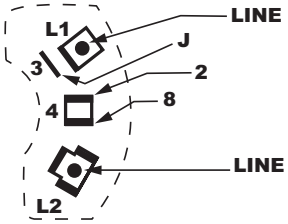


## Troubleshooting

### Motor will not run

1. Check incoming power to control cabinet.
2. Check for tripped manual motor starter (overload) in control cabinet. (Refer to Motor Overload service section for proper settings).
3. Check power at motor contactor.

### Motor runs hot and trips motor starter overload

1. Check for proper voltage between L1-L2 or (L1-l2, L2-L3, L1-L3 for 3 phase).
2. Check FLA on motor leads L1, L2, (also L3 for 3 phase) using amp tester. (Motor full load amp (FLA) ratings are stamped on motor nameplate).

### Motor Replacement

1. Disconnect the power to the machine.
2. Disconnect the wires to the motor junction box.
3. **Make note of the motor connections in order to phase the replacement correctly.**
4. Install the new motor and check for proper rotation. (Proper rotation is clockwise looking from at the rear of the motor).
5. Motor rotation can be reversed by switching L1 and L2 on three phase motors. Single phase motor rotation cannot be reversed.

# ELECTRICAL SERVICE (CONT')

## Motors-Drive

| | | | |
|---|---|---|---|
| Voltage: | Standard motors are multi-voltage | | |
| | Low Voltage: | 208-240VAC | 1 Phase Only |
| | High Voltage: | 380/480/575VAC | 3 Phase Only |

## 208-240V 1Phase Wiring Diagram

To reverse motor rotation interchange yellow and orange leads.

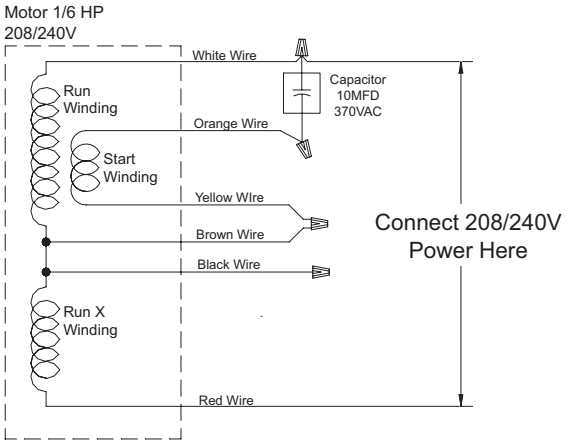


## 380/480/575/V 3Phase Wiring Diagram

To reverse motor rotation interchange any two external connections.

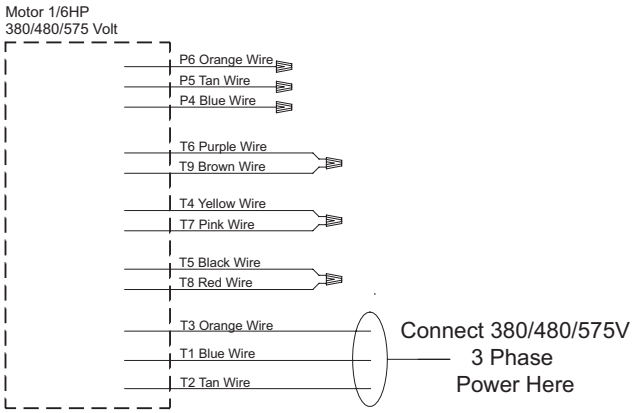


## Drive Interlock Switch

Drive interlock will activate when a jam has occured in the unit.

- When a jam occurs, the switch opens and the pump(s) and drive motor are then shut off, similar to the reaction of pushing the red **STOP** pushbutton (the green light goes out also).
- The switch will automatically reset when the jam is cleared. To restart/reset the machine push the green **START** pushbutton and insert a loaded rack.

# REPLACEMENT PARTS

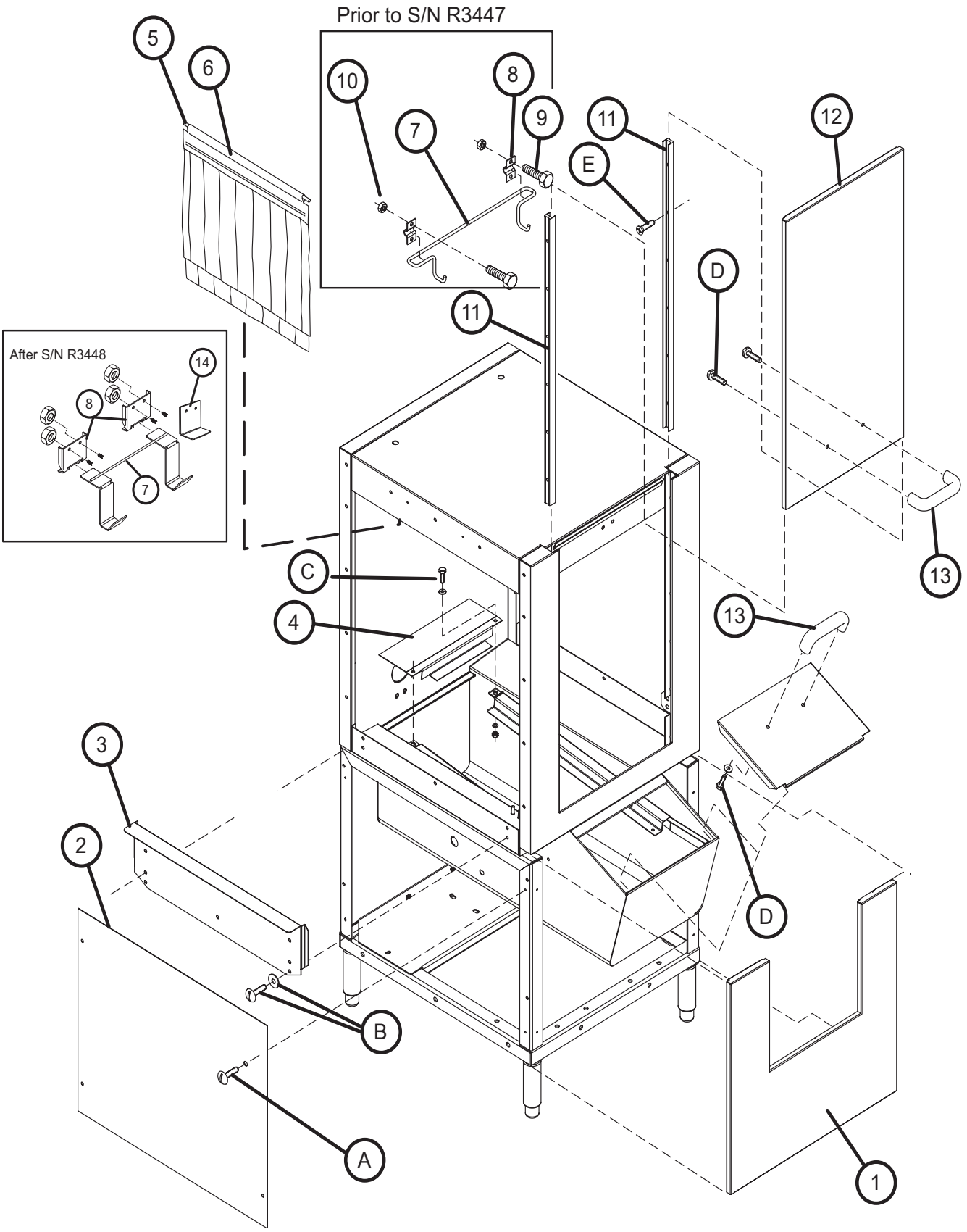


**Figure 15- Prewash Panels, Doors and Miscellaneous**

## PREWASH PANELS, DOORS AND MISCELLANEOUS

| Fig. 15 Item No. | Part No. | Part Description | Qty |
|---|---|---|---|
| 1 | 328977 | Panel, Front Perimeter 22PW | 1 |
| 1 | 328978 | Panel, Front Perimeter 36PW | 1 |
| 2 | 327857 | Panel, 25" Prewash Perimeter | 1 |
| 3 | 328030 | Table Flange Support | 1 |
| 4 | 328006 | Support, 22 PW Rear Screen | 1 |
| 5 | 108250 | Rod Curtain 5/16 x 24-5/8 | 1 |
| 6 | 108043 | Curtain 24 x 13-1/4 | 1 |
| 7 | 206358 | Rod, 22PW Door Catch (Prior to S/N R3447) | 1 |
| 7 | 328909 | Door Catch 22PW (After S/N R3448) | 1 |
| 8 | 327887 | Bracket, Door Catch Mounting (Prior to S/N R3447) | 2 |
| 8 | 317345 | Bracket, Door Catch (After S/N R3448) | 2 |
| 9 | 100734 | Bolt, 1/4-20 x 1/2 Hex Head | 2 |
| 10 | 100141 | Nut, Grip 1/4-20 SST | 2 |
| 11 | 113691 | Guide, U-channel Door | 2 |
| 12 | 327952 | Door, 22PW | 1 |
| --- | 111026 | Magnet, Door (Not Shown) | 1 |
| --- | 113719 | Switch, Reed Aleph (Not Shown) | 1 |
| 13 | 108966 | Door Handle | 2 |
| 14 | 313359 | Bracket, Door Stop | 1 |
| **A** | **Panel Fasteners (Qty per Panel)** | | |
| | 100007 | Screw 10-32 x 3/8 Truss Head | 4 |
| **B** | **Table Flange Fasteners** | | |
| **C** | **Screen Support Fasteners** | | |
| | | Bolt | |
| | | Washer | |
| | | Nut | |
| **D** | **Door and Scrap Basket Handle Fasteners (Qty per Handle)** | | |
| | 100073 | Screw1/4-20 x 1/2 Truss Head | 2 |
| **E** | **Door Guide Fasteners (Qty per Guide)** | | |
| | 113486 | Screw 8-32 x 5/8 Flat Head SST | 6 |
| | 112431 | Rivnut 8/32 Steel Zinc Plated | 6 |

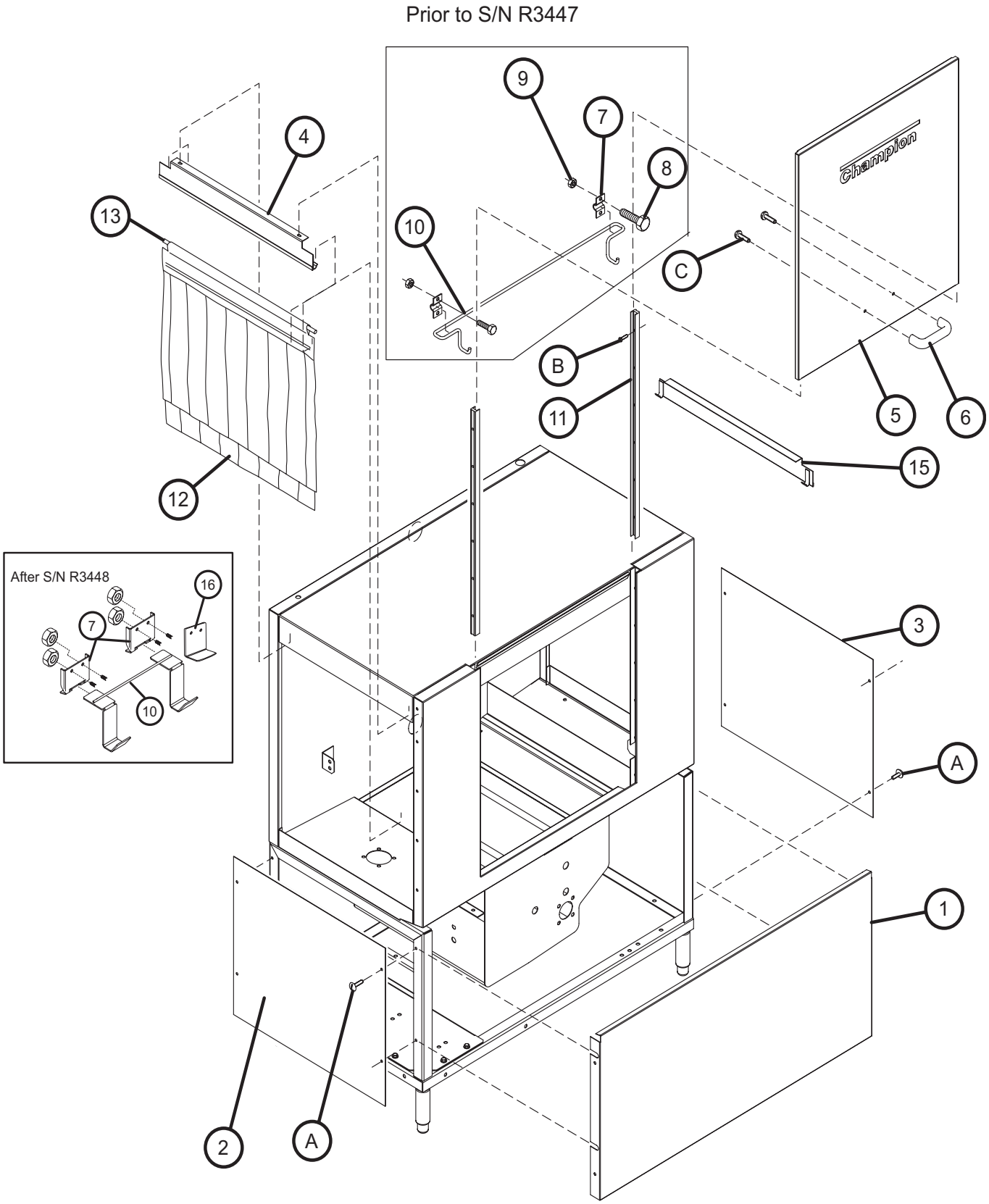


**Figure 16- Single Tank Doors, Panels and Miscellaneous**

## SINGLE TANK PANELS, DOORS AND MISCELLANEOUS

| Fig. 15 Item No. | Part No. | Part Description | Qty |
|---|---|---|---|
| 1 | 328974 | Panel, 44 Front Perimeter | 1 |
| 2 | 327889 | Panel, 25" Side Perimeter (Load, L-R, No PreWash) | 1 |
| 3 | 327889 | Panel, 25" Side Perimeter (Unload, L-R No Booster) | 1 |
| 4 | 327988 | Entrance/Exit Curtain Baffle | 2 |
| 5 | 327857 | Door | 1 |
| --- | 111026 | Magnet, Door (Not Shown) | 1 |
| --- | 113719 | Switch, Reed Aleph (Not Shown) | 1 |
| 6 | 108966 | Door Handle | 1 |
| 7 | 327887 | Bracket, Door Catch Mounting (Prior to S/N R3447) | 1 |
| 7 | 317345 | Bracket, Door Catch (After S/N R3448) | 2 |
| 8 | 100734 | Bolt, 1/4-20 x 1/2 Hex Head | 1 |
| 9 | 100141 | Nut, Grip 1/4-20 SST | 1 |
| 10 | 206305 | Rod, Rack Door Catch (Prior to S/N R3447) | 1 |
| 10 | 308133 | Door Catch Dual Hook (After to S/N R3448) | 1 |
| 11 | 113691 | Guide, U-channel Door | 2 |
| 12 | 113720 | Curtain 24 x 20-1/4 4 Ply (Load and Unload) | 2 |
| 13 | 108250 | Rod, Curtain 5/16 x 24-5/8 | 3 |
| 14 | 109723 | Curtain 24 x 6 -1/4 (Not shown) | 1 |
| 15 | 328024 | Curtain Baffle Rinse | 1 |
| 16 | 313359 | Bracket, Door Stop | 1 |
| **A** | **Panel Fasteners (Qty per Panel)** | | |
| | 100007 | Screw 10-32 x 3/8 Truss Head | 4 |
| **B** | **Door Guide Fasteners (Qty per Guide)** | | |
| | 113486 | Screw 8-32 x 5/8 Flat Head SST | 6 |
| | 112431 | Rivnut 8/32 Steel Zinc Plated | 6 |
| **C** | **Door Handle Fasteners** | | |
| | 100073 | Screw 1/4-20 x 1/2 Truss Head | 2 |

*** Items 4 and 15 are welded into hood of machine.**

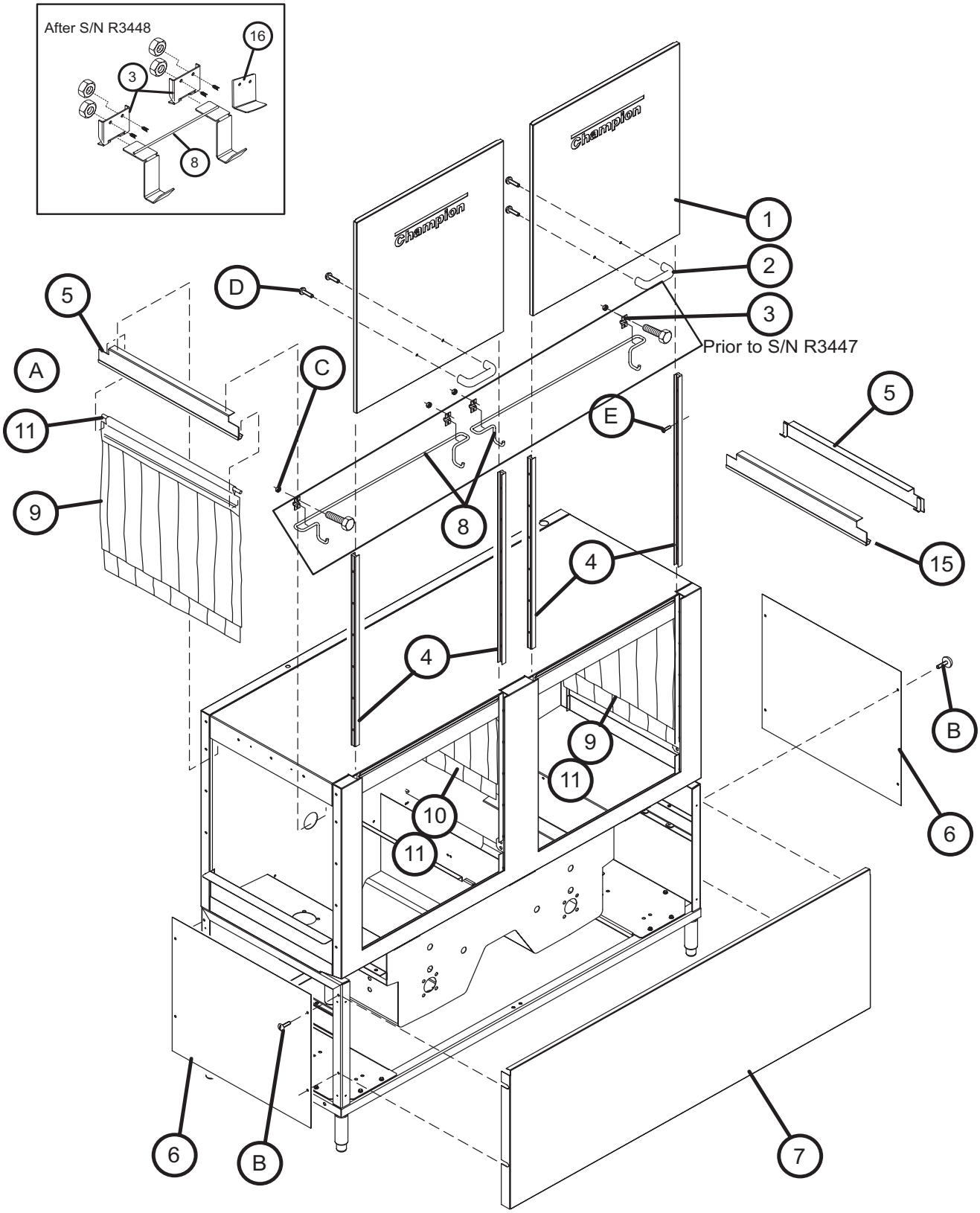


**Figure 17- Two Tank Doors, Panels and Miscellaneous**

## DOUBLE TANK PANELS, DOORS AND MISCELLANEOUS

| Fig. 17 Item No. | Part No. | Part Description | Qty |
|---|---|---|---|
| 1 | 414303 | Door Assembly Wash (Includes Magnet, Switch and Item 2) | 2 |
| --- | 111026 | Magnet, Door (Not Shown) | 1 |
| --- | 113719 | Switch, Reed Aleph (Not Shown) | 1 |
| 2 | 108966 | Door Handle | 2 |
| 3 | 327887 | Bracket, Door Catch, Mounting (Prior to S/N R3447) | 2 |
| 3 | 317345 | Bracket, Door Catch (After S/N R3448) | 4 |
| 4 | 113691 | Guide, U-channel Door | 4 |
| 5 | 328023 | Baffle, Rack Curtain End | 3 |
| 6 | 327889 | Panel, 25" Side Perimeter (Load, No Prewash) | 1 |
| 6 | 327889 | Panel, 25" Side Perimeter (Unload, No Booster) | 1 |
| 7 | 328975 | Panel, 64 Front Perimeter | 1 |
| 7 | 328976 | Panel, 84 Front Perimeter Left Hand | 1 |
| 7 | 328976-01 | Panel, 84 Front Perimeter Right Hand | 1 |
| 8 | 206305 | Rod, Rack Door Catch (Prior to S/N R3447) | 1 |
| 8 | 308133 | Door Catch Dual Hook (After to S/N R3448) | 2 |
| 9 | 113720 | Curtain 24 x 20" 4 Ply (Load/Unload) | 2 |
| 10 | 108043 | Curtain 24 x 13-1/4" (Wash/Rinse) | 1 |
| 11 | 108250 | Rod, Curtain 5/16 x 24-5/8" | 4 |
| 12 | 328030 | Table Flange | 2 |
| 13 | 109723 | Curtain 24 x 6-1/4" (Rinse/Final Rinse)(Not Shown) | 1 |
| 14 | 327851 | Door (only) 44 | A/R |
| 15 | 328024 | Center, Curtain Baffle (Not Shown) | 1 |
| 16 | 313359 | Bracket, Door Stop | 2 |
| **A** | **Panel Fasteners (Qty per Panel)** | | |
| | 100007 | Screw 10-32 x 3/8 Truss Head | 4 |
| **B** | **Door Guide Fasteners (Qty per Guide)** | | |
| | 113486 | Screw 8-32 x 5/8 Flat Head SST | 6 |
| | 112431 | Rivnut 8/32 Steel Zinc Plated | 6 |
| **C** | **Door Handle Fasteners** | | |
| | 100073 | Screw 1/4-20 x 1/2 Truss Head | 2 |

*** Items 5 and 15 are welded into hood of machine.**

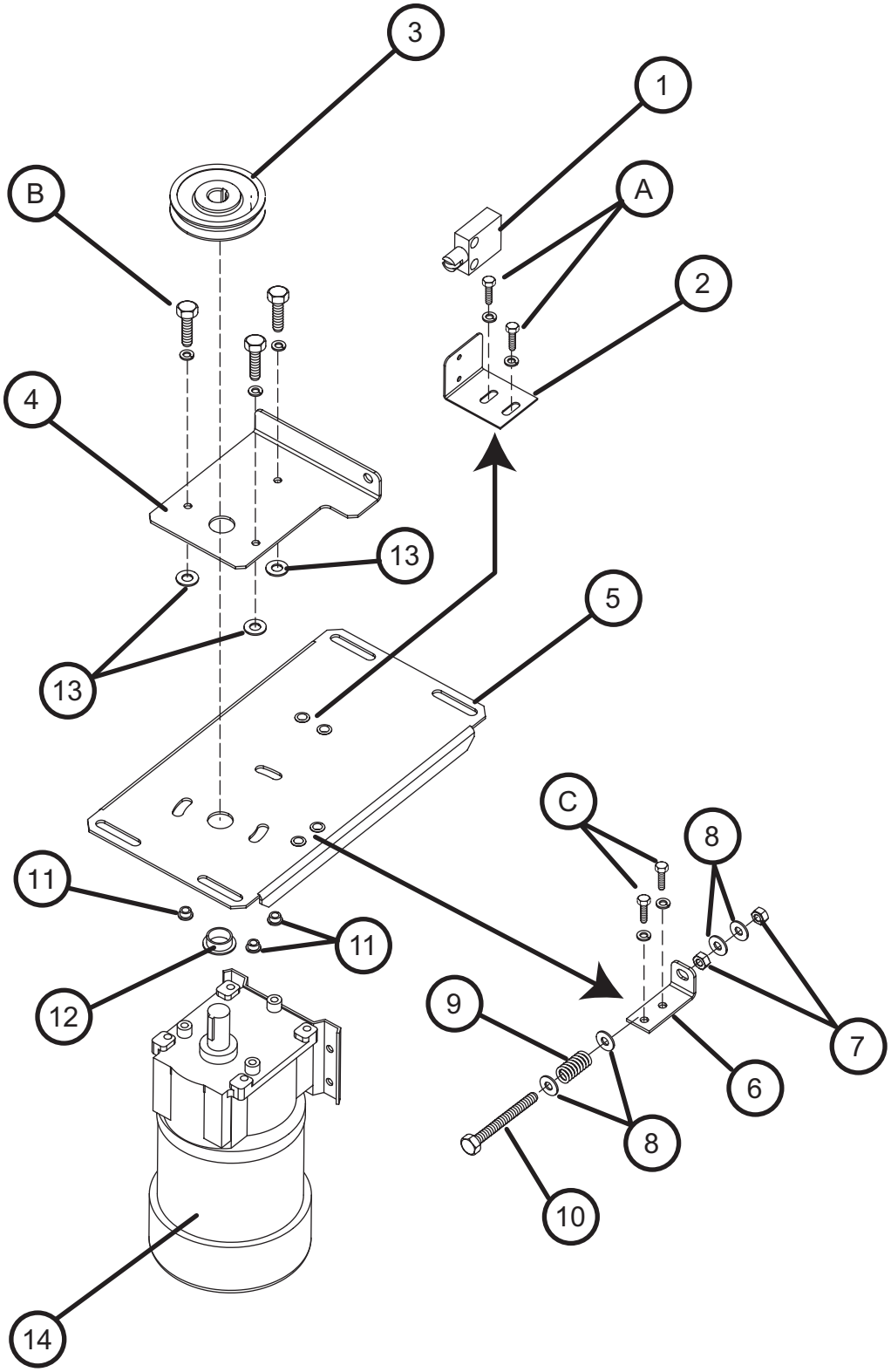


**Figure 18- Drive Motor Assembly**

## DRIVE MOTOR ASSEMBLY

| Fig. 18 Item No. | Part No. | Part Description | Qty |
|---|---|---|---|
| 1 | 0509199 | Drive Motor Switch | 1 |
| 2 | 327918 | Bracket, Motor Switch Mounting | 1 |
| 3 | 103166 | Sheave AK 39 5/8 Bore (44) | 1 |
| 3 | 113893 | Sheave AK 51 5/8 Bore (64) | 1 |
| 4 | 327916 | Plate, Drive Motor Mounting | 1 |
| 5 | 327920 | Plate, 44 Motor Assy Mounting | 1 |
| 5 | 327917 | Plate, 64 Motor Assy Mounting | 1 |
| 6 | 327919 | Bracket, Motor Spring Mounting | 1 |
| 7 | 100154 | Hex Nut Plain 5/16-18 SST | 2 |
| 8 | 102376 | Washer, Flat 5/16 x 3/4 x .06 SST | 4 |
| 9 | 113702 | Spring 0.6OD x 0.095 Wire x 1.5 Lg | 1 |
| 10 | 113704 | Screw, 5/16 x 3-1/2 Hex Head SST | 1 |
| 11 | 113700 | Bushing 3/8 x 3/4 x 1/16 Thrust Bronze | 3 |
| 12 | 113703 | Bushing, 3/4 x 7/8 x 3/8 x 1-1/8 Flg | 1 |
| 13 | 113701 | Bushing 1/4 x 3/8 x 1/2 x 1/16 Flg Bronze | 1 |
| 14 | 113732 | Motor, Gear 1/6HP 3PH | 1 |
| 14 | 113679 | Motor, Gear 1/6HP 1PH | 1 |
| **A** | **Switch Plate Fasteners** | | |
| | 100734 | Bolt 1/4-20 x 1/2 Hex Head SST | 2 |
| | 106482 | Washer Lock 1/4 Split | 2 |
| | 112433 | Rivnut, 1/4-20 Steel | 2 |
| **B** | **Drive Motor Mounting Plate Fasteners** | | |
| | 100736 | Bolt 1/4-20 x 3/4 Hex Head | 3 |
| | 106482 | Washer Lock 1/4 Split | 3 |
| **C** | **Spring Bracket Fasteners** | | |
| | 100734 | Bolt 1/4-20 x 1/2 Hex Head SST | 2 |
| | 106482 | Washer Lock 1/4 Split | 2 |
| | 112433 | Rivnut, 1/4-20 Steel | |

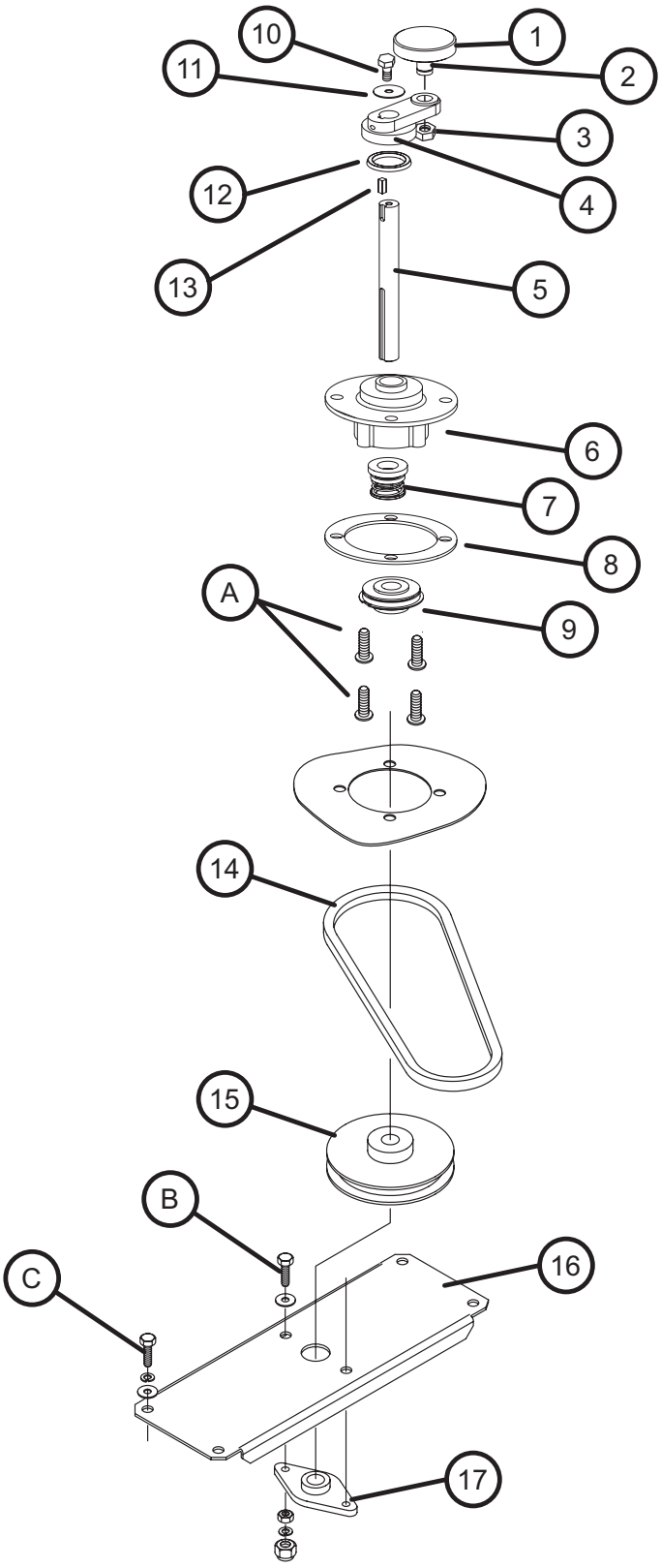


**Figure 19- Drive Assembly**

## DRIVE ASSEMBLY

| Fig. 19 Item No. | Part No. | Part Description | Qty |
|---|---|---|---|
| 1 | 202381 | Roller Crosshead | 1 |
| 2 | 100868 | Roller Stud Crosshead | 1 |
| 3 | 107089 | Nut Jam 1/2-13 | 1 |
| 4 | 206300 | Crank, Rack Arm | 1 |
| 5 | 206301 | Shaft 5/8 Diameter 8-3/8 LG | 1 |
| 6 | 206302 | Housing, Bearing/Seal | 1 |
| 7 | 102244 | Seal 5/8" | 1 |
| 8 | 206303 | Gasket/Bearing Seal | 1 |
| 9 | 100382 | Bearing Jaf #EK104-10 | 1 |
| 10 | 100007 | Screw, 10-32 x 3/8 Truss Head | 1 |
| 11 | 104925 | Washer 1/4 x 1 x 16 Gauge | 1 |
| 12 | 103180 | Wiper Ring | 1 |
| 13 | 104916 | Key 3/16 x 3/16 x 3/4 SST | 1 |
| 14 | 100794 | V-belt 4L 310 | 1 |
| 15 | 113892 | Sheave AK 59-5/8 Bore | 1 |
| 16 | 327924 | Bracket, 44 Drive Bearing Mounting | 1 |
| 17 | 113860 | Bearing, Sealed 5/8 Bore | 1 |
| **A** | **Bearing Housing Fasteners** | | |
| | 104923 | Screw 1/4-20 x 3/8 Round Head | 4 |
| | Mounted to Inside of Tank | | |
| | 100153 | Bolt 3/8-16 x 1 Hex Head | 4 |
| | 104618 | Washer 3/8 x 7/8 x 1/16 SST | 4 |
| | 109010 | Nut Grip 3/8 w/Nylon Insert | 4 |
| **B** | **Bearing Fasteners** | | |
| | 100739 | Bolt 5/16-18 x 3/4 Hex Head SST | 2 |
| | 100154 | Nut Plain 5/16-18 | 2 |
| | 106013 | Washer Lock 5/16 Split | 2 |
| | 109009 | Nut Grip 5/16 w/Nylon Insert | 2 |
| **C** | **Drive Bearing Bracket Fasteners** | | |
| | 100739 | Bolt 5/16-18 x 3/4 Hex Head SST | 4 |
| | 106013 | Washer Lock 5/16-18 Split | 4 |
| | 102376 | Washer 5/16 x 3/4 x 1/16 | 4 |

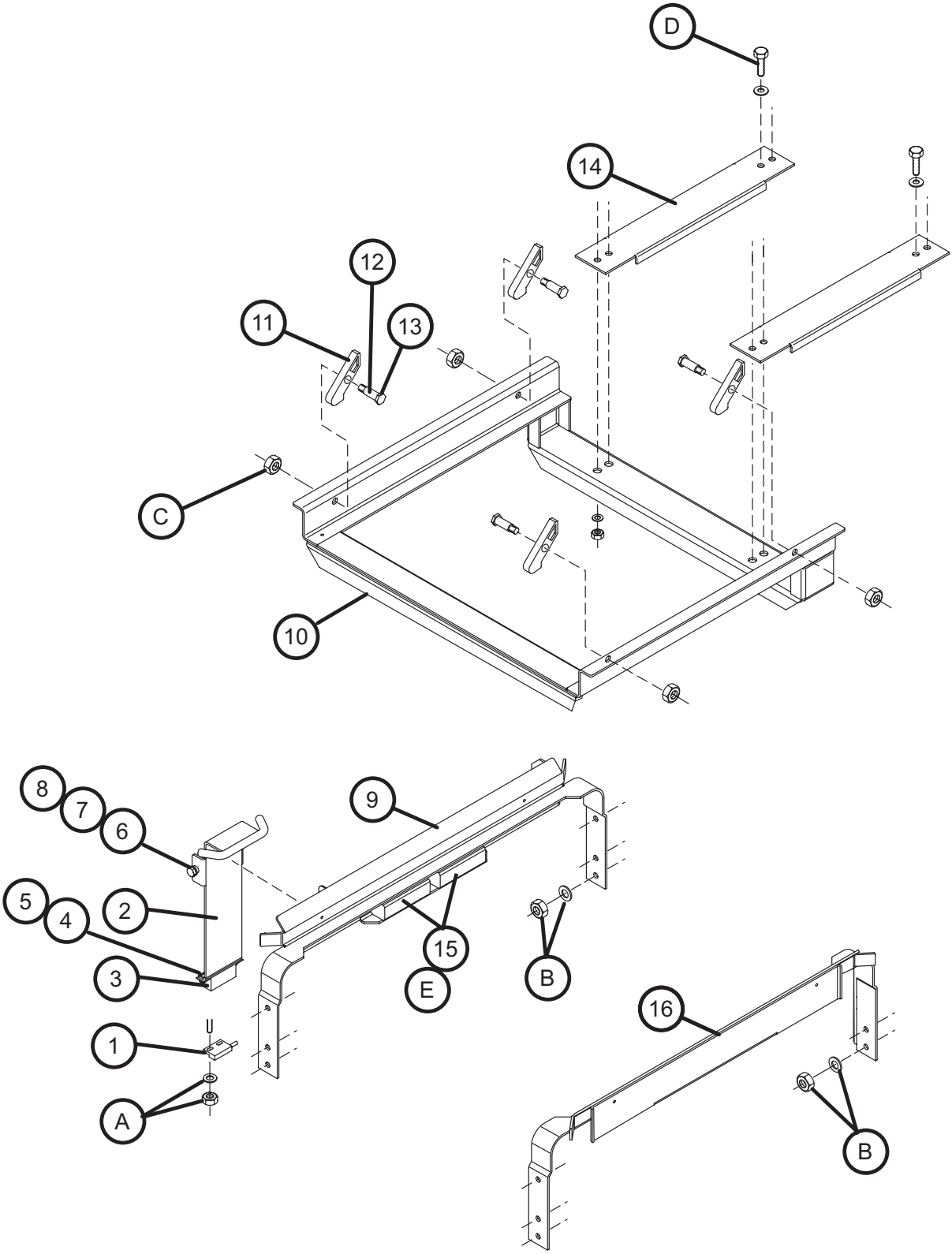


**Figure 20- Prewash Track and Cradle Assembly**

## PREWASH TRACK AND CRADLE ASSEMBLY

| Fig. 20 Item No. | Part No. | Part Description | Qty |
|---|---|---|---|
| 1 | 113719 | Switch, Reed Aleph | 1 |
| 2 | 328045 | Switch, PW Idle | 1 |
| 3 | 111026 | Magnet, SS | 1 |
| 4 | 100764 | Screw, 6-32 x 1/2 Round Head SST | 2 |
| 5 | 108954 | Nut, Grip 6-32 Hex Head W/Nylon Insert | 2 |
| 6 | 106482 | Washer Lock 1/4 Split | 2 |
| 7 | 327833 | Pin Idle Pump Switch | 1 |
| 8 | 100736 | Screw, 1/4-20 x 3/4 Hex Head | 2 |
| 9 | 328041 | Track, 22" PW Rear | 1 |
| 10 | 328043 | Cradle, 22" PW | 1 |
| 11 | 204513 | Pawl, NG Cradle | 4 |
| 12 | 206345 | Bushing, Rack Cradle Pawl | 4 |
| 13 | 113692 | Screw, 3/8 x .875 x 5/15-18 | 4 |
| 14 | 328450 | Bracket, Cradle bridge Single Tank/22PW | 2 |
| 14 | 328613 | Bracket, Cradle Bridge Two Tank/36PW | 2 |
| 15 | 206343 | Bearing, Rack Cradle Slide | 4 |
| 16 | 327955 | Track, 22" PW Front | 1 |
| **B** | **Track Fasteners (Qty per Track)** | | |
| | 112318 | | 4 |
| | 100141 | Nut, Grip 1/4-20 | 4 |
| **C** | **Pawl Fasteners (Qty per Pawl)** | | |
| | 100142 | Nut, Grip 5/16-18 | 1 |
| **E** | **Slide Bearing Fasteners (Qty per Slide)** | | |
| | 100736 | Bolt 1/4-20 x 3/4 Hex Head SST | 2 |
| | 106482 | Washer Lock 1/4-20 Split | 2 |

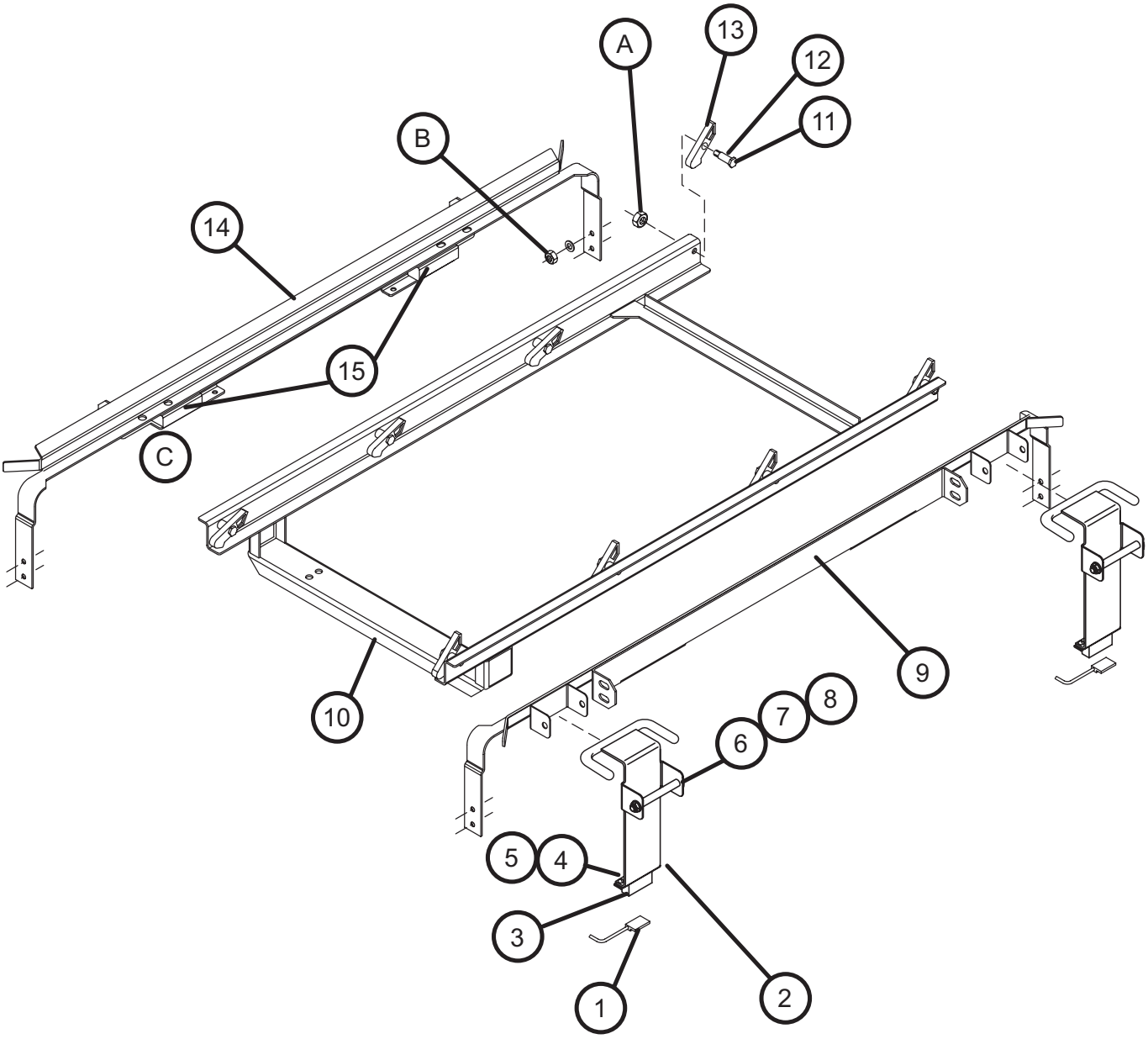


**Figure 21- Single Tank Track and Cradle Assembly**

## SINGLE TANK TRACK AND CRADLE ASSEMBLY

| Fig. 21 Item No. | Part No. | Part Description | Qty |
|---|---|---|---|
| 1 | 113719 | Switch, Reed Aleph | 1 |
| 2 | 414344 | Switch, Idle Assembly (Includes Items 3-8) | 1 |
| 3 | 111026 | Magnet, SS | 1 |
| 4 | 100764 | Screw, 6-32 x 1/2 Round Head SST | 2 |
| 5 | 108954 | Nut, Grip 6-32 Hex Head W/Nylon Insert | 2 |
| 6 | 106482 | Washer Lock 1/4 Split | 2 |
| 7 | 327833 | Pin Idle Pump Switch | 1 |
| 8 | 100736 | Screw, 1/4-20 x 3/4 Hex Head | 2 |
| 9 | 414370 | Track, 44 Front | 1 |
| 10 | 414307 | Cradle, 44 | 1 |
| 11 | 113692 | Screw, 3/8 x .875 x 5/15-18 | 8 |
| 12 | 206345 | Bushing, Rack Cradle Pawl | 8 |
| 13 | 204513 | Pawl, NG Cradle | 8 |
| 14 | 414357 | Track, 44 Rear | 1 |
| 15 | 206343 | Bearing, Rack Cradle Slide | 4 |
| --- | 414377 | Cradle, 44 Complete (Includes Items 10-13 and A) | A/R |
| **A** | **Pawl Fasteners (Qty per Pawl)** | | |
| | 100142 | Nut, Grip 5/16-18 | 1 |
| **B** | **Track Fasteners (Qty per Track)** | | |
| | 112318 | | 4 |
| | 100141 | Nut, Grip 1/4-20 | 4 |
| **C** | **Slide Bearing Fasteners (Qty per Slide)** | | |
| | 100736 | Bolt 1/4-20 x 3/4 Hex Head SST | 2 |
| | 106482 | Washer Lock 1/4-20 Split | 2 |

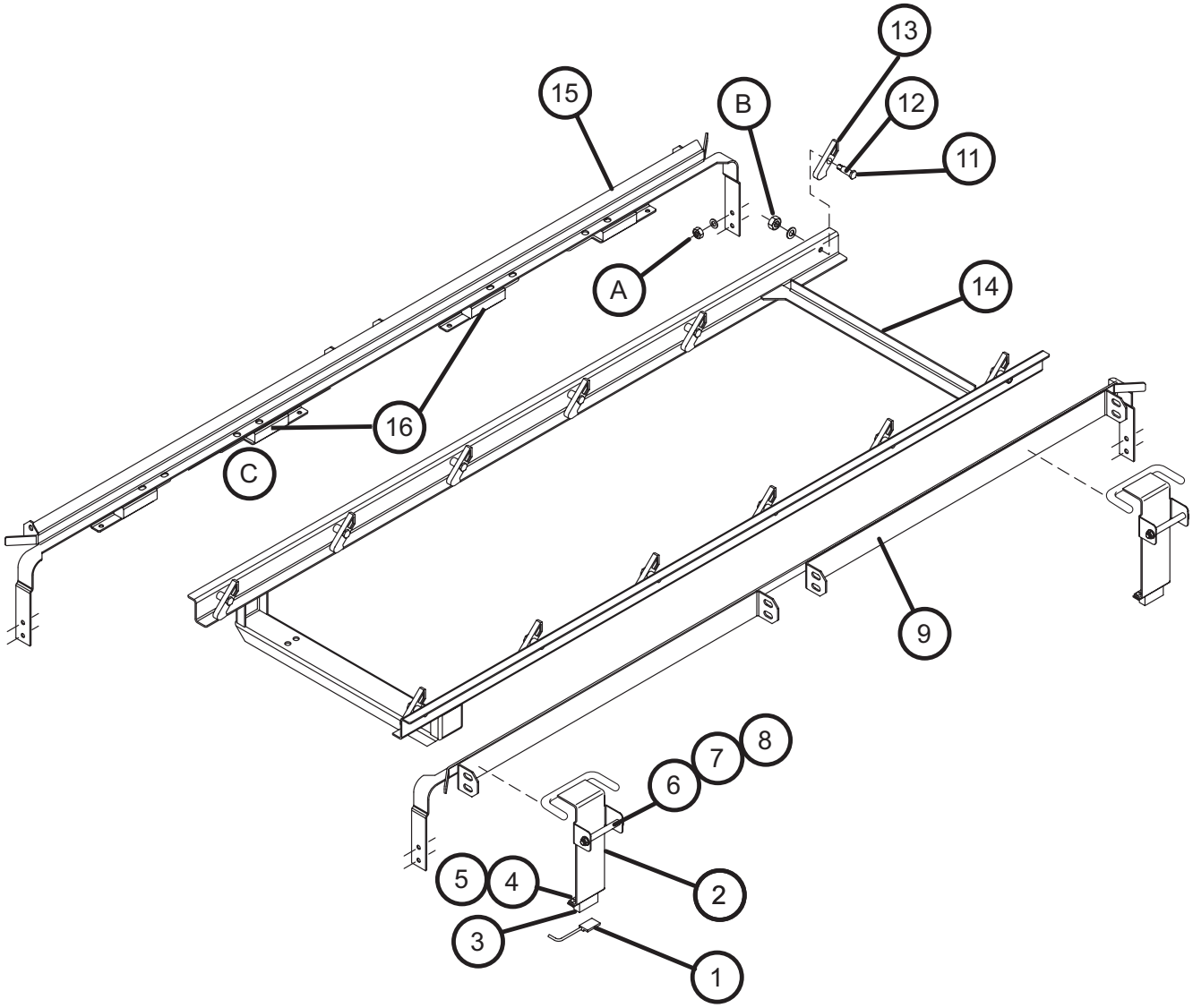


**Figure 22- Two Tank Track and Cradle Assembly**

## TWO TANK TRACK AND CRADLE ASSEMBLY

| Fig. 22 Item No. | Part No. | Part Description | Qty |
|---|---|---|---|
| 1 | 113719 | Switch, Reed Aleph | 1 |
| 2 | 414344 | Switch, Idle Assembly (Includes Items 3-8) | 1 |
| 3 | 111026 | Magnet, SS | 1 |
| 4 | 100764 | Screw, 6-32 x 1/2 Round Head SST | 2 |
| 5 | 108954 | Nut, Grip 6-32 Hex Head W/Nylon Insert | 2 |
| 6 | 106482 | Washer Lock 1/4 Split | 2 |
| 7 | 327833 | Pin Idle Pump Switch | 1 |
| 8 | 100736 | Screw, 1/4-20 x 3/4 Hex Head | 2 |
| 9 | 414372 | Track, 64 Front | 1 |
| 10 | 414378 | Cradle, 64 Assembly (Includes Items 11-14) | 1 |
| 11 | 113692 | Screw, 3/8 x .875 x 5/15-18 | 12 |
| 12 | 206345 | Bushing, Rack Cradle Pawl | 12 |
| 13 | 204513 | Pawl, NG Cradle | 12 |
| 14 | 414308 | Cradle, 64 | 1 |
| 15 | 414358 | Track, 64 Rear | 1 |
| 16 | 206343 | Bearing, Rack Cradle Slide | 8 |
| **A** | **Track Fasteners (Qty per Track)** | | |
| | 112318 | | 4 |
| | 100141 | Nut, Grip 1/4-20 | 4 |
| **B** | **Pawl Fasteners (Qty per Pawl)** | | |
| | 100142 | Nut, Grip 5/16-18 | 1 |
| **C** | **Slide Bearing Fasteners (Qty per Slide)** | | |
| | 100736 | Bolt 1/4-20 x 3/4 Hex Head SST | 2 |
| | 106482 | Washer Lock 1/4-20 Split | 2 |

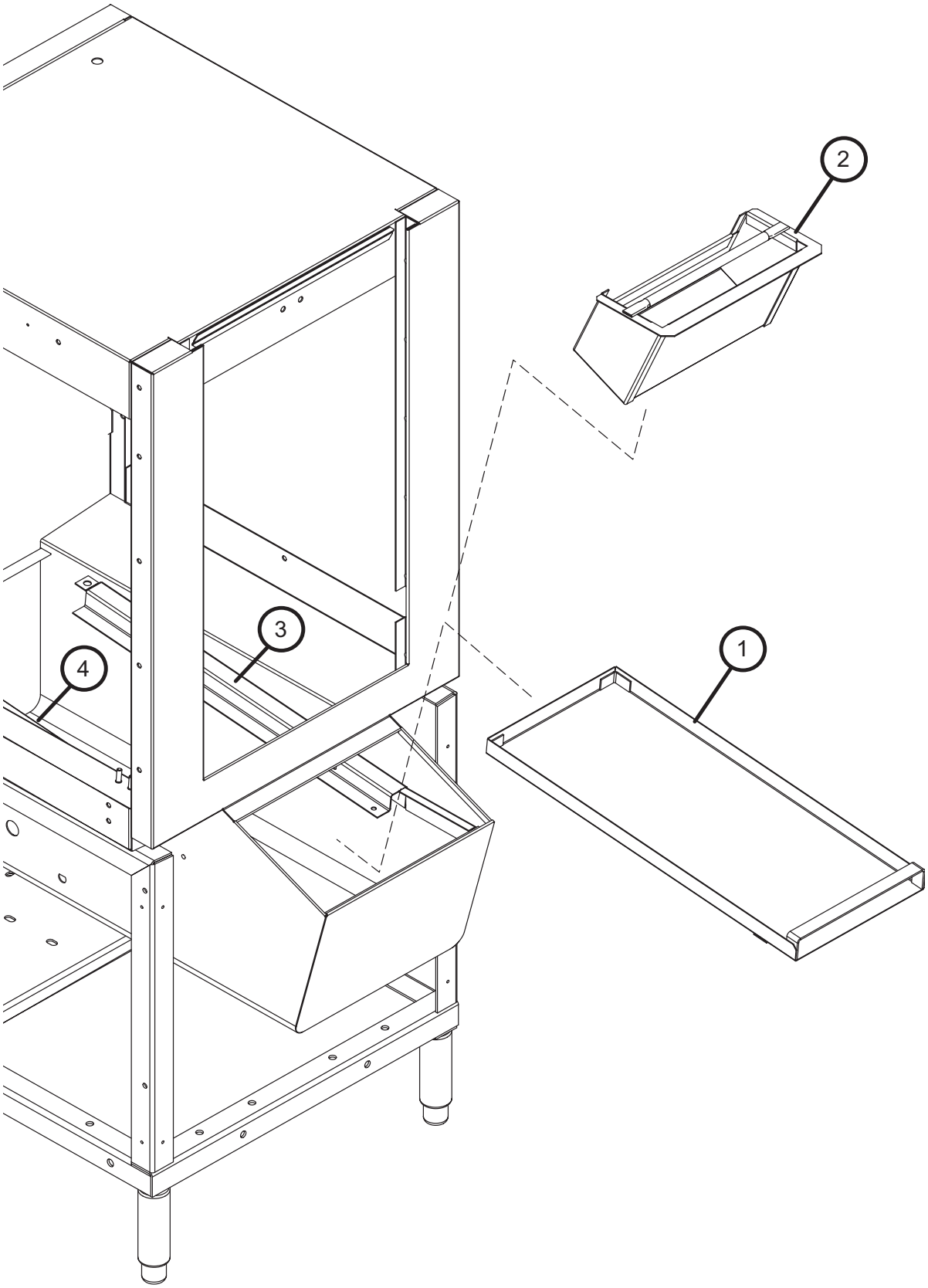


**Figure 23- Prewash Screens**

## PREWASH SCRAP SCREENS

| Fig. 23 Item No. | Part No. | Part Description | Qty |
|---|---|---|---|
| 1 | 328958 | Screen Assy | 1 |
| 2 | 328959 | Refuse Basket | 1 |
| 3 | 328044 | Support, PW RH Screen | 1 |
| 4 | 328042 | Support, PW LH Screen | 1 |
| 5 | 328006 | Support, PW Rear Screen (Not Shown) | 1 |

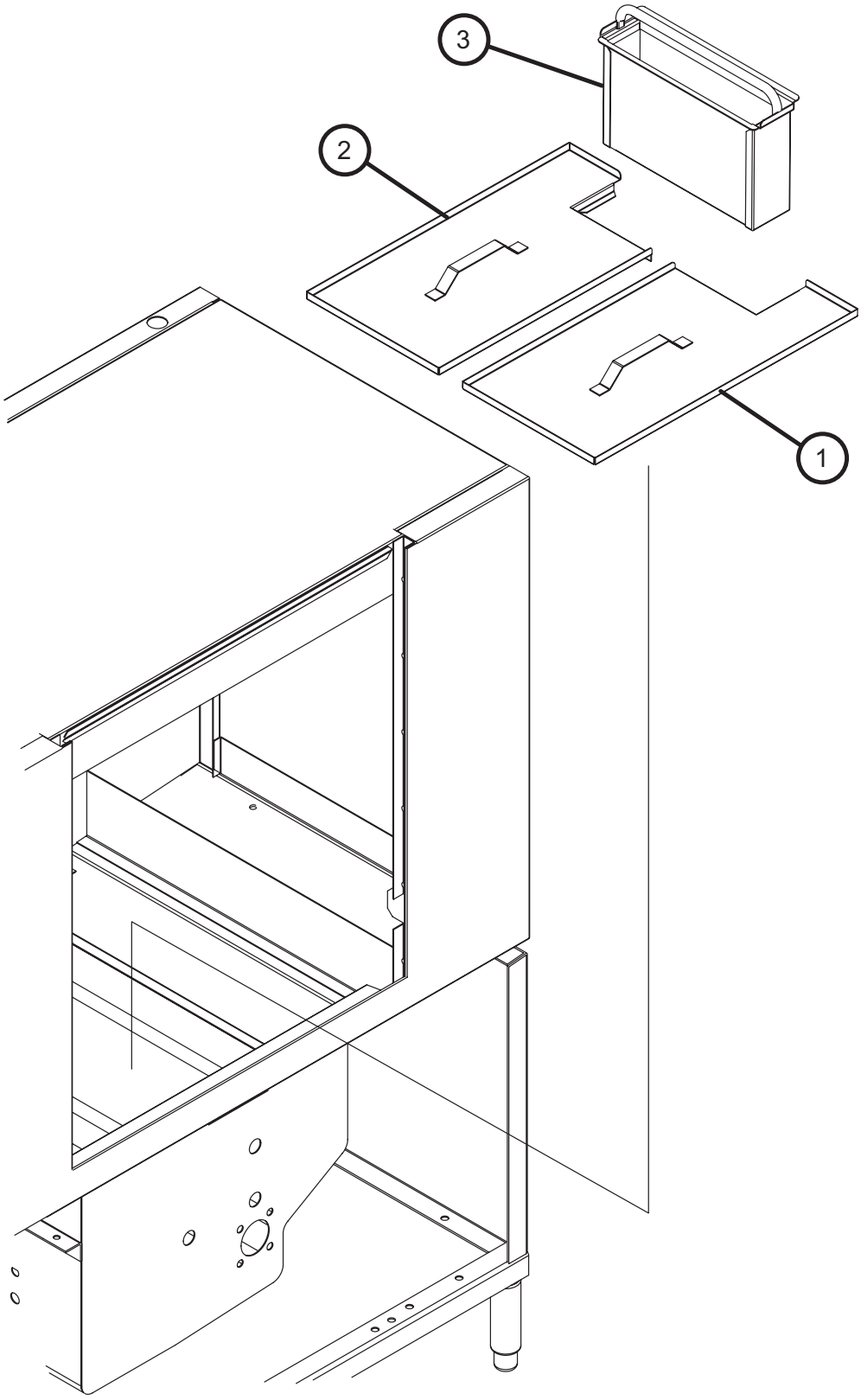


**Figure 24- Single Tank Scrap Screens**

## SINGLE TANK SCRAP SCREENS

| Fig. 24 Item No. | Part No. | Part Description | Qty |
|---|---|---|---|
| 1 | 414328 | Screen, 44 L-R Front | 1 |
| 2 | 414329 | Screen, 44 L-R Rear | 1 |
| 3 | 414300 | Basket, Rack | 1 |
| 4 | 327888 | Support, Screen Middle (Not Shown) | 1 |

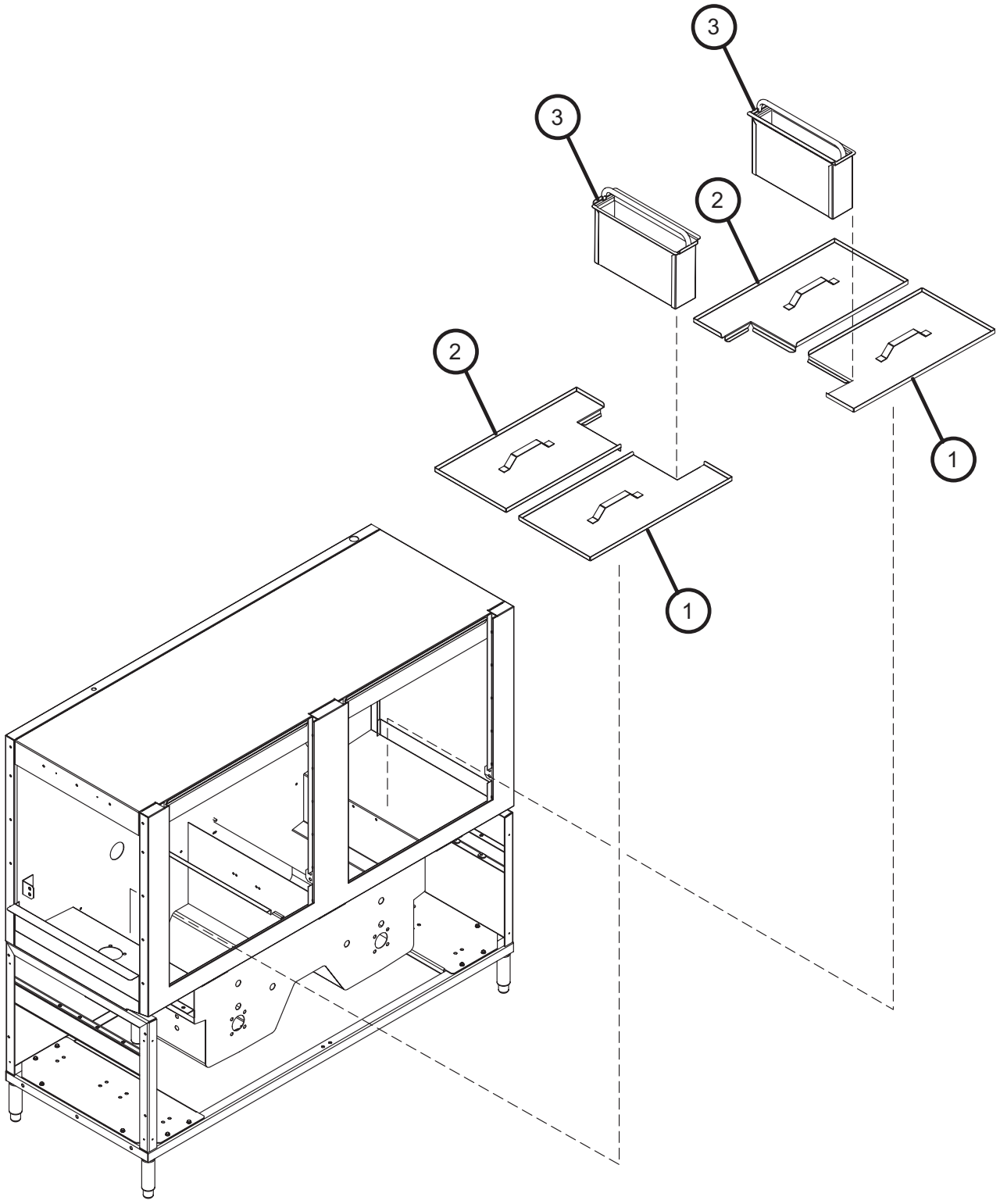


**Figure 22 -Two Tank Scrap Screens**

## TWO TANK SCRAP SCREENS

| Fig. 22 Item No. | Part No. | Part Description | Qty |
|---|---|---|---|
| 1 | 414328 | Screen, 44 L-R Front | 1 |
| 2 | 414329 | Screen, 44 L-R Rear | 1 |
| 3 | 414300 | Basket, Rack | 1 |
| 4 | 327888 | Support, Screen Middle (Not Shown) | 1 |

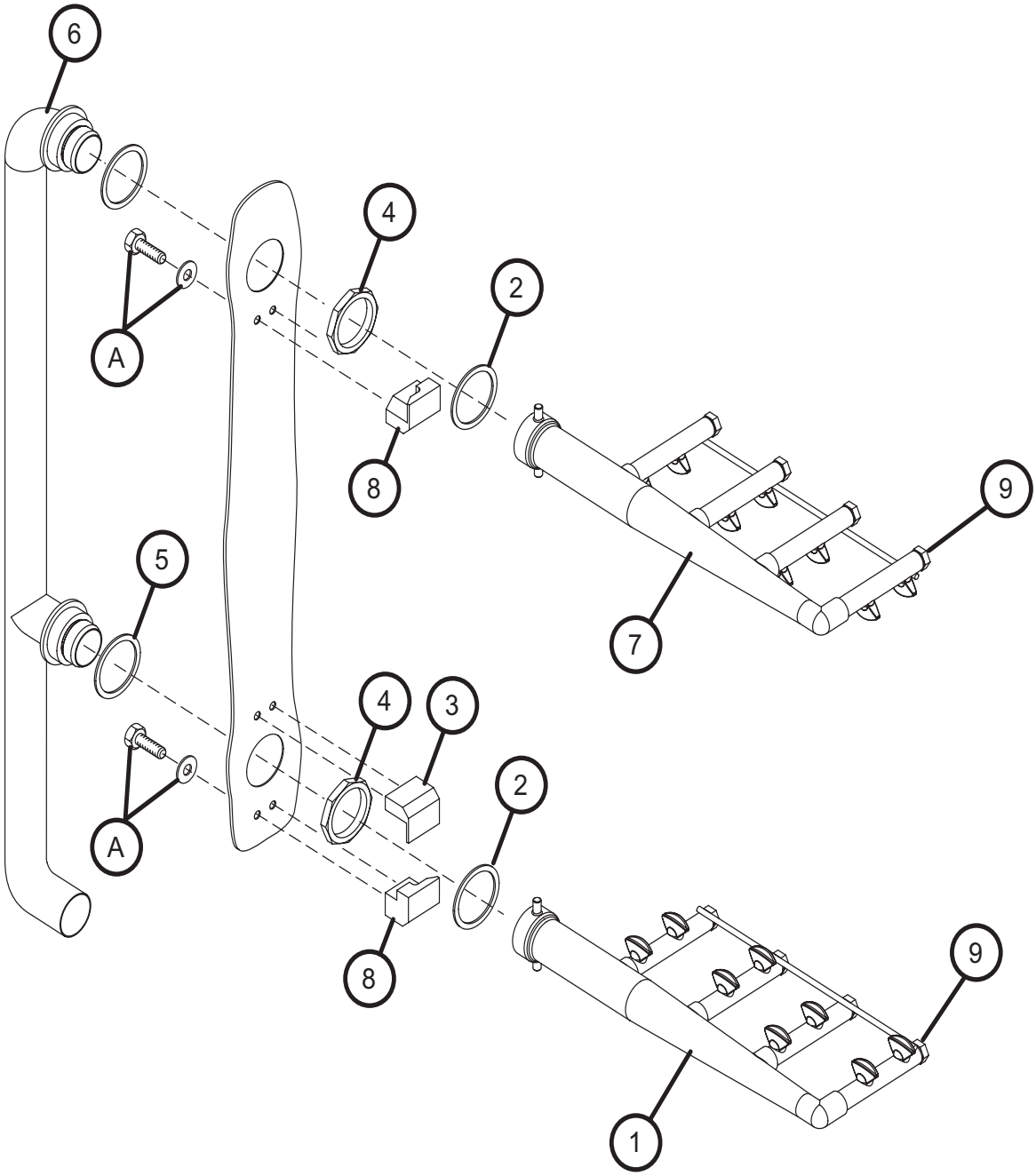


**Figure 26- Prewash Spray Arms**

## PREWASH SPRAY ARMS

| Fig. 26 Item No. | Part No. | Part Description | Qty |
|---|---|---|---|
| 1 | 414293 | Wash Manifold Assembly 6" Lower (Includes Item 9)..... | 1 |
| 2 | 113723 | O-ring,1.75 ID ..... | 1 |
| 3 | 206355 | Lock, CW Wash Pin ..... | 4 |
| 4 | 113540 | Locknut 2NPT SST ..... | 2 |
| 5 | 113542 | Gasket, Flat EDPM 2-3/8 ID ..... | 2 |
| 6 | 328028 | Standpipe, 22" PW ..... | 1 |
| 7 | 414292 | Wash Manifold Assy 6" Upper ..... | 1 |
| 8 | 206354 | Lock, CCW Wash Pin ..... | 2 |
| 9 | 113555 | Plug, Wash Arm E-Series (qty per arm) (Included in Item 1)..... | 4 |
| **A** | **Wash Arm Lock Fasteners (Qty per Arm)** | | |
| | 100739 | Bolt 5/16-18 x 3/4 Hex Head ..... | 4 |
| | 106013 | Washer Lock 5/16 Split ..... | 4 |
| | 102376 | Washer 5/16 x 3/4 x 1/16 ..... | 4 |

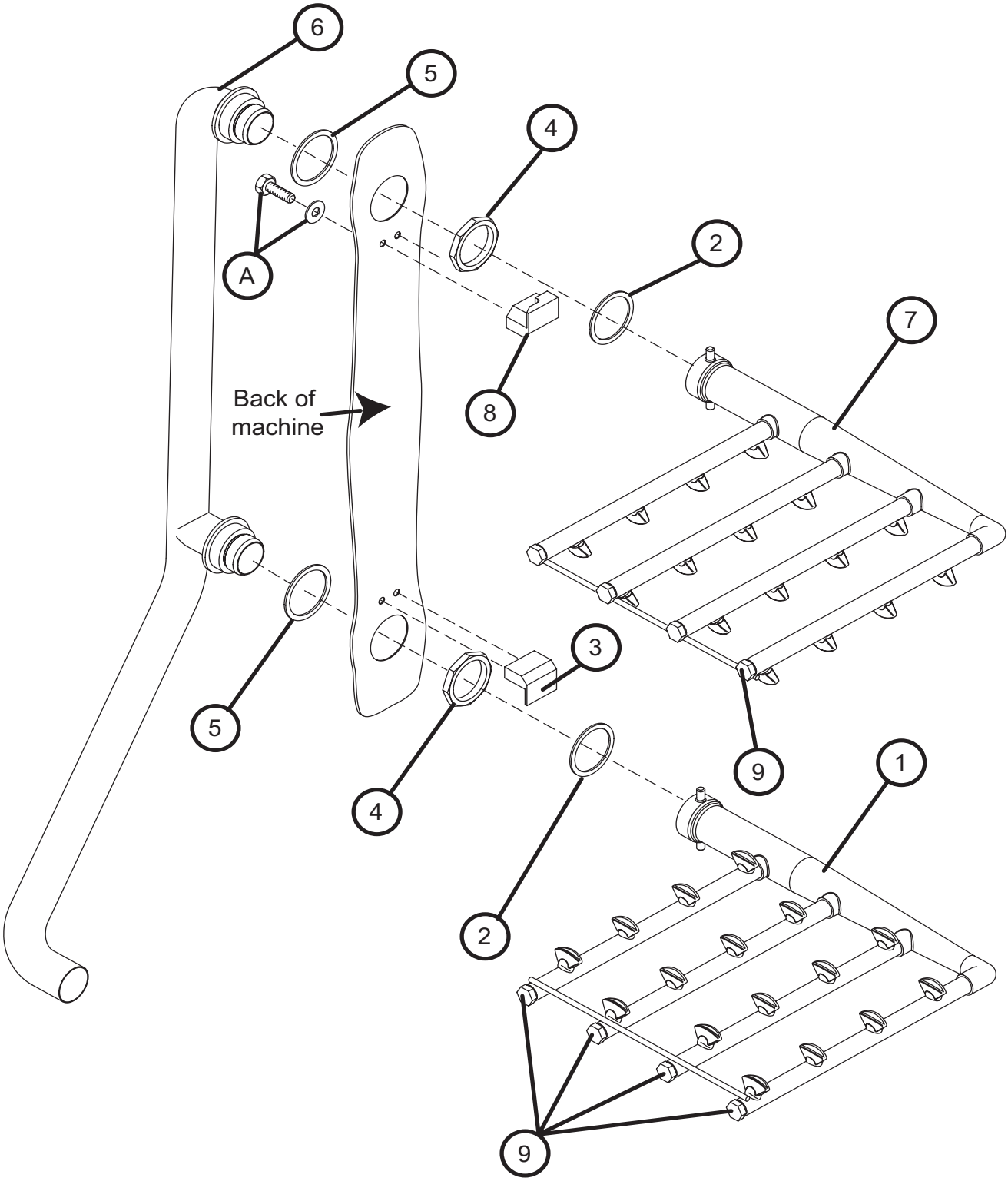


**Figure 27- Single Tank Wash Arms**
**(Left to Right Shown)**

## SINGLE TANK WASH ARMS

| Fig. 27 Item No. | Part No. | Part Description | Qty |
|---|---|---|---|
| 1 | 414291 | Wash Manifold Assembly 10" 15° Lower (L-R) (Includes Item 9) | 1 |
| 1 | 414290 | Wash Manifold Assembly 10" 15° Lower (R-L) (Includes Item 9) | 1 |
| 2 | 113723 | O-ring,1.75 ID | 2 |
| 3 | 206354 | Lock, CCW Wash Pin | 1 |
| 4 | 113540 | Locknut 2NPT SST | 2 |
| 5 | 113542 | Gasket, Flat EDPM 2-3/8 ID | 2 |
| 6 | 414317 | Standpipe, L-R 44 | 1 |
| 6 | 327993 | Standpipe, R-L 44 | 1 |
| 7 | 414289 | Wash Manifold Assy 14" Straight Upper (L-R) | 1 |
| 7 | 414288 | Wash Manifold Assy 14" Straight Upper (R-L) | 1 |
| 8 | 206355 | Lock, CW Wash Pin | 1 |
| 9 | 113555 | Plug, Wash Arm E-Series (qty per arm)(Included In Items 1 & 2) | 4 |
| **A** | **Wash Arm Lock Fasteners (Qty per Arm)** | | |
| | 100739 | Bolt 5/16-18 x 3/4 Hex Head | 4 |
| | 106013 | Washer Lock 5/16 Split | 4 |
| | 102376 | Washer 5/16 x 3/4 x 1/16 | 4 |

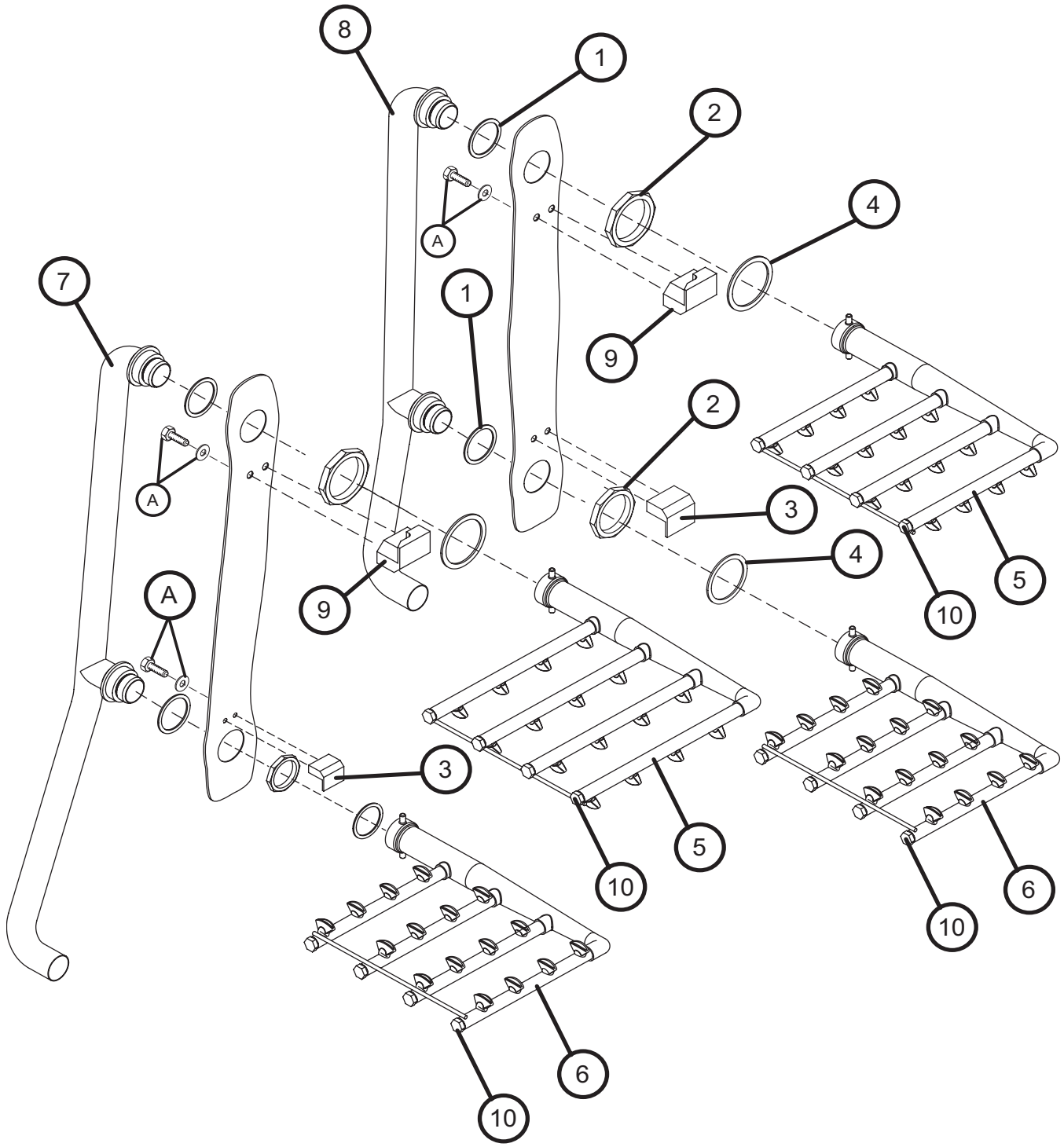


**Figure 28- Two Tank Wash & Rinse Spray Arms**
**(Left to Right Shown)**

## TWO TANK WASH AND RINSE ARMS

| Fig. 28 Item No. | Part No. | Part Description | Qty |
|---|---|---|---|
| 1 | 113542 | Gasket, Flat EDPM 2-3/8 ID | 4 |
| 2 | 113540 | Locknut 2NPT SST | 4 |
| 3 | 206354 | Lock, CCW Wash Pin | 1 |
| 4 | 113723 | O-ring,1.75 ID | 2 |
| 5 | 414289 | Wash Manifold Assembly 14" Straight Upper (L-R)(Includes Item 9) | 2 |
| 5 | 414288 | Wash Manifold Assembly 14" Straight Upper (R-L)(Includes Item 9) | 2 |
| 6 | 414291 | Wash Manifold Assembly 10" 15° Lower (L-R) | 2 |
| 6 | 414290 | Wash Manifold Assembly 10" 15° Lower (R-L) | 2 |
| 7 | 414318 | Standpipe 64 L-R Wash | 1 |
| 7 | 328443 | Standpipe 64 R-L Wash | 1 |
| 8 | 414319 | Standpipe 64 L-R Rinse | 1 |
| | 328445 | Standpipe 64 R-L Rinse | 1 |
| 9 | 206355 | Lock, CW Wash Pin | 2 |
| 10 | 113555 | Plug, Wash Arm E-Series (qty per arm) (Included in Items 5 & 6) | 4 |
| **A** | **Wash Arm Lock Fasteners (Qty per Arm)** | | |
| | 100739 | Bolt 5/16-18 x 3/4 Hex Head | 4 |
| | 106013 | Washer Lock 5/16 Split | 4 |
| | 102376 | Washer 5/16 x 3/4 x 1/16 | 4 |

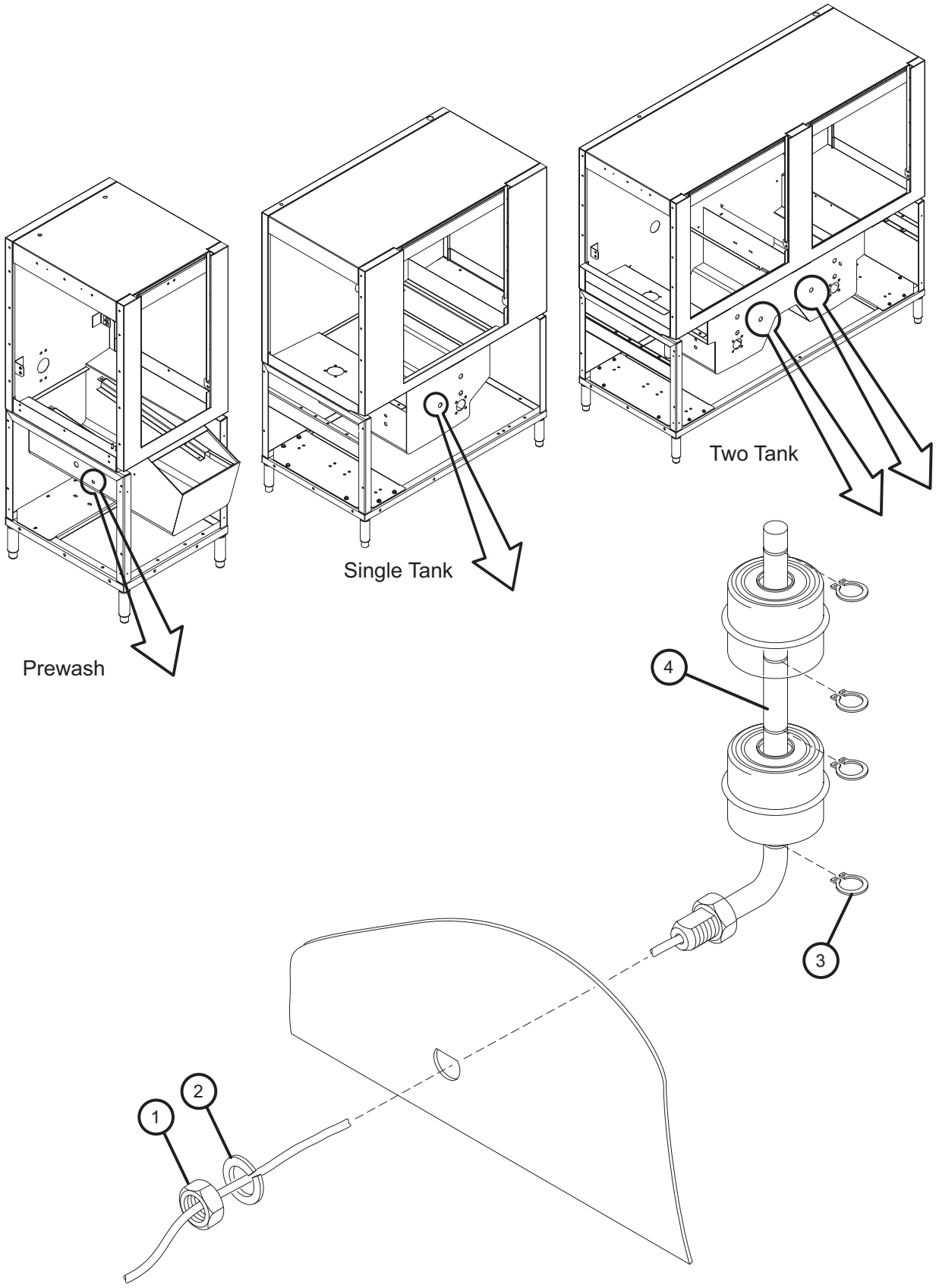


**Figure 29- Float Switch**

## FLOAT SWITCH

| Fig. 29 Item No. | Part No. | Part Description | Qty |
|---|---|---|---|
| 1 | 104584 | Nut, Plain 1/2-13 | 1 |
| 2 | 107589 | Washer, Flat 1/2" | 1 |
| 3 | 111151 | C-Clip | A/R |
| 4 | 110854 | Float Switch Dual (Prewash) | 1 |
| | 113291 | Float Switch Dual W/R (44) | 1 |
| | 113291 | Float Switch Dual W/R (64) | 2 |
| -- | 110750 | Gasket, Float Switch (Not Shown) | A/R |

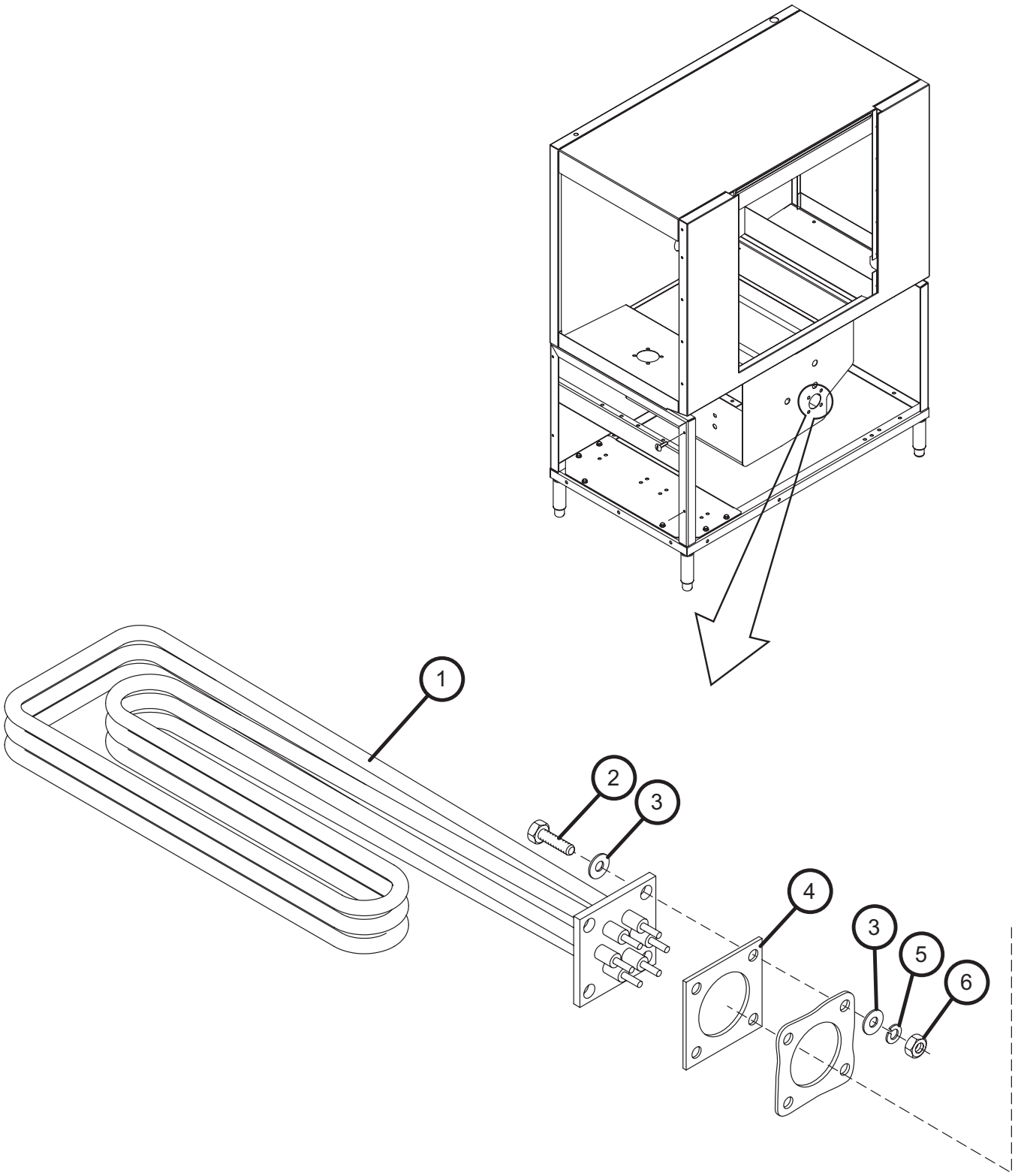


**Figure 30- Single Tank Electric Heat**

## SINGLE TANK ELECTRIC HEAT

| Fig. 30 Item No. | Part No. | Part Description | Qty |
|---|---|---|---|
| 1 | 113516 | Heater 15/18KW 208V,380V | 1 |
| | 113517 | Heater 15/16.3KW 230/240V, 400/415V | 1 |
| | 113518 | Heater 15/16.3KW 460/480V | 1 |
| | 113519 | Heater 15KW 575V | 1 |
| 2 | 100153 | Bolt, 3/18-16 x 1 Hex Head | 4 |
| 3 | 104618 | Washer 3/8 x 7/8 x 1/16 SST | 8 |
| 4 | 108345 | Gasket 3 x 3 x 1/8" 2" Hole | 1 |
| 5 | 106407 | Washer Lock 3/8 Split | 4 |
| 6 | 100140 | Nut Plain 3/8-16 | 4 |

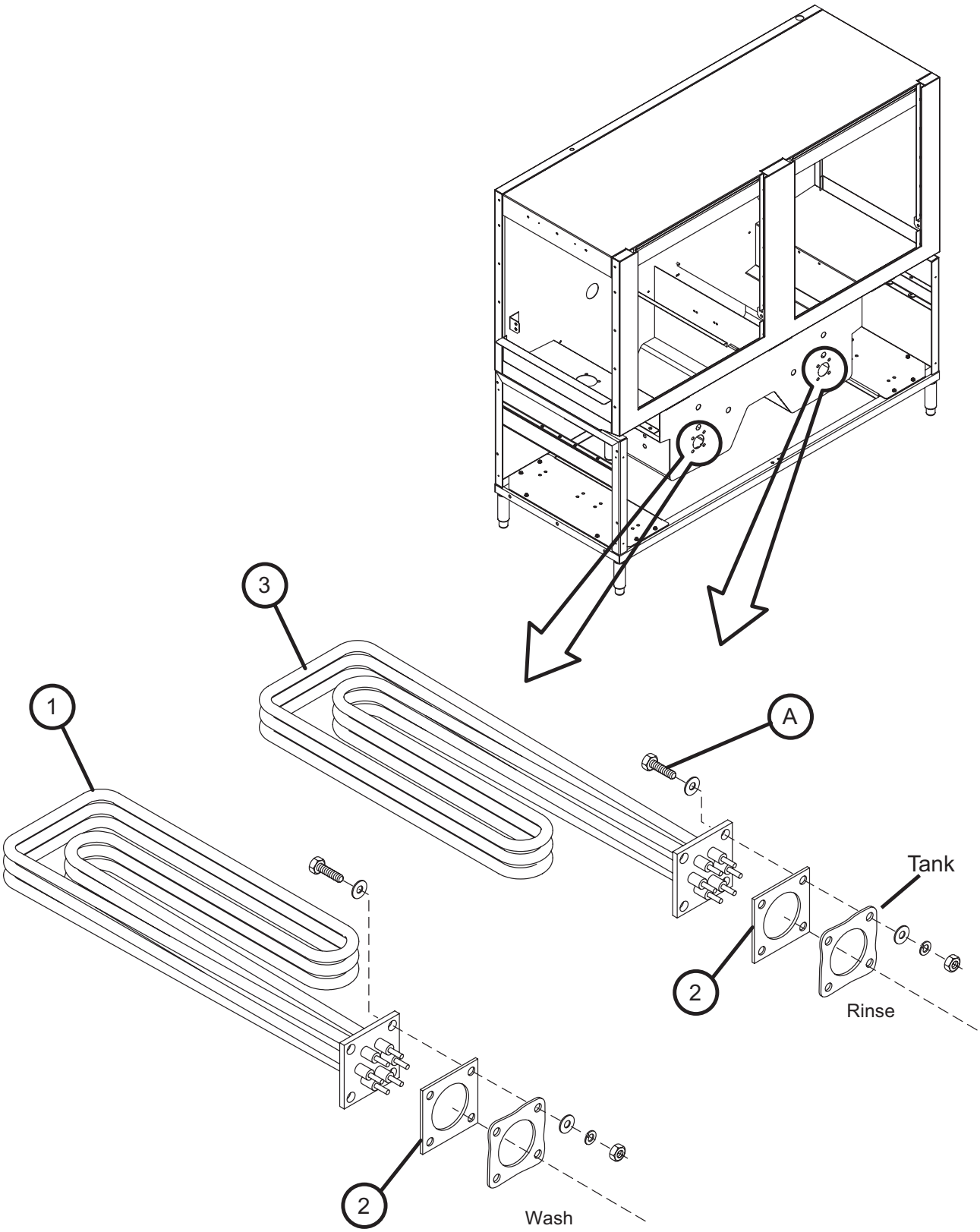


**Figure 31- Two Tank Electric Heat**

## TWO TANK ELECTRIC HEAT

| Fig. 31 Item No. | Part No. | Part Description | Qty |
|---|---|---|---|
| 1 | 113516 | Heater 15/18KW 200/220V (Wash) | 1 |
| | 113517 | Heater 15/16.3KW 230/240V(Wash) | 1 |
| | 113518 | Heater 15/16.3KW 460/480V (Wash) | 1 |
| | 113519 | Heater 15KW 575V (Wash) | 1 |
| 2 | 108345 | Gasket 3 x 3 x 1/8" 2" Hole | 1 |
| 3 | 113804 | Heater 10/12.1 KW 200/220V (Rinse) | 1 |
| | 113882 | Heater 10/11KW 230/240V (Rinse) | 1 |
| | 113883 | Heater 10/11KW 460/480V (Rinse) | 1 |
| | 113884 | Heater 10/11KW 575V (Rinse) | 1 |
| **A** | **Element Fasteners (Qty Per Element)** | | |
| | 100153 | Bolt, 3/18-16 x 1 Hex Head | 4 |
| | 104618 | Washer 3/8 x 7/8 x 1/16 SST | 8 |
| | 106407 | Washer Lock 3/8 Split | 4 |
| | 100140 | Nut Plain 3/8-16 | 4 |

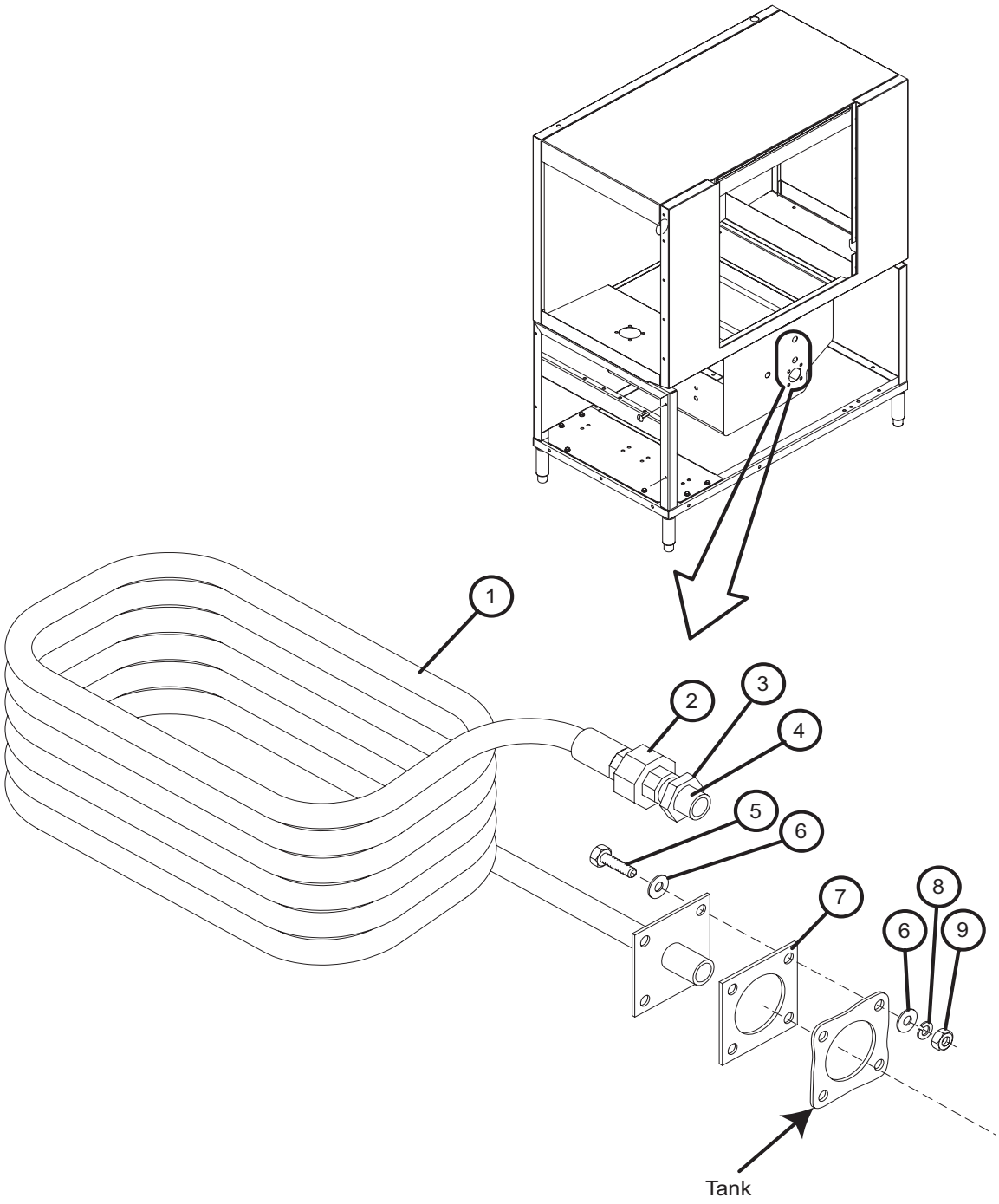


**Figure 32- Single Tank Steam Heat**

## SINGLE TANK STEAM HEAT

| Fig. 32 Item No. | Part No. | Part Description | Qty |
|---|---|---|---|
| 1 | 327908 | Coil, Steam RH (Shown) | 1 |
| 1 | 327907 | Coil, Steam LH | 1 |
| 2 | 102554 | Union 3/4 SST | 1 |
| 3 | 100548 | Locknut, 3/4NPT SST | 1 |
| 4 | 113918 | Nipple, Rtoe 3/4 x 1-3/4 | 1 |
| 5 | 100740 | Bolt 5/16-18 x 1 Hex Head | 4 |
| 6 | 102376 | Washer 5/16 X 3/4 x 1/16 | 8 |
| 7 | 108345 | Gasket 3 x 3 1/8" 2IN Hole | 1 |
| 8 | 106013 | Washer Lock 5/16 Split | 4 |
| 9 | 100154 | Nut Plain 5/16-18 | 4 |

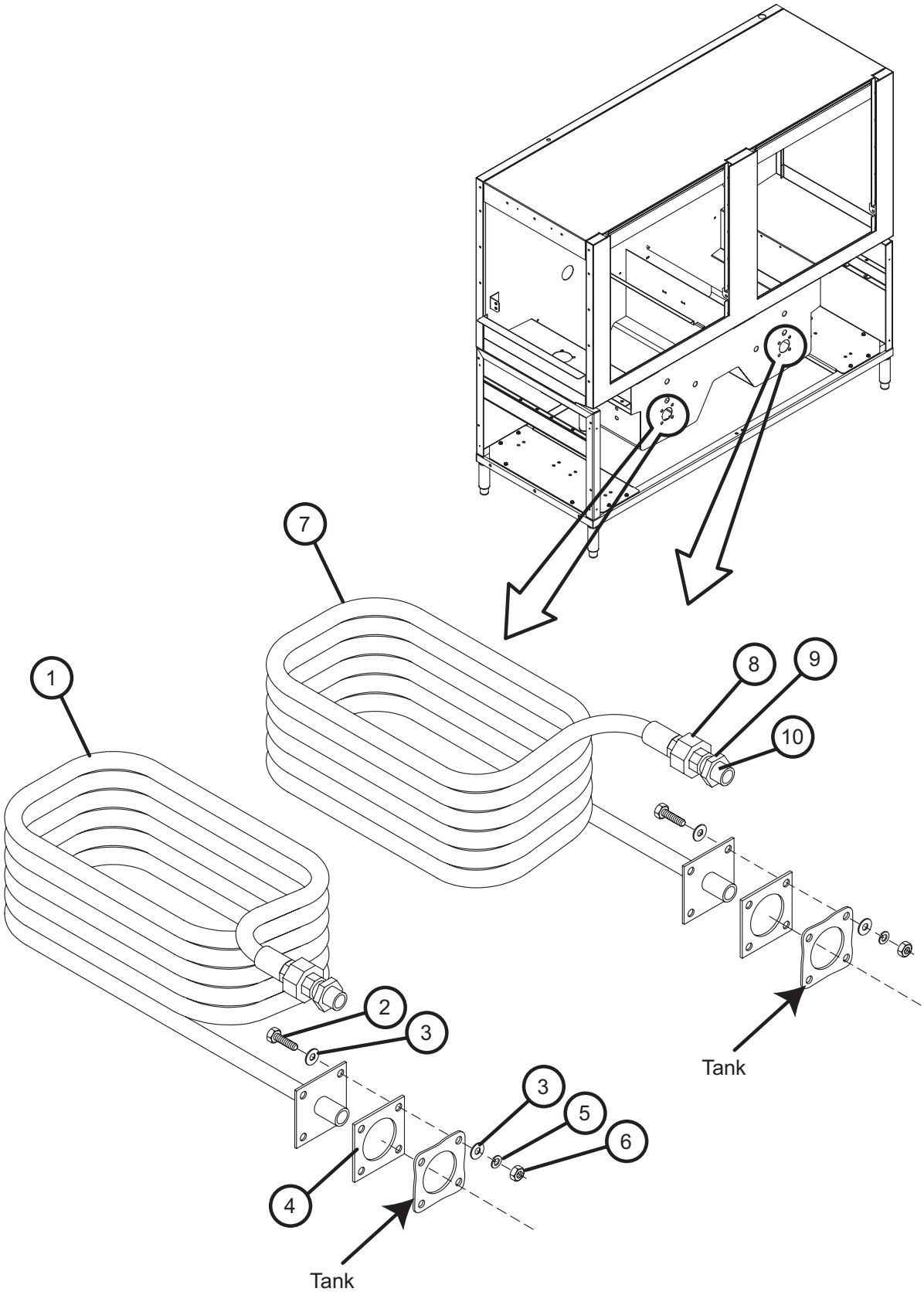


**Figure 33- Two Tank Steam Heat**

## TWO TANK STEAM HEAT

| Fig.33 Item No. | Part No. | Part Description | Qty |
|---|---|---|---|
| 1 | 327907 | Coil, Steam LH | 1 |
| 2 | 100740 | Bolt 5/16-18 x 1 Hex Head | 8 |
| 3 | 102376 | Washer 5/16 X 3/4 x 1/16 | 16 |
| 4 | 108345 | Gasket 3 x 3 1/8" 2IN Hole | 2 |
| 5 | 106013 | Washer Lock 5/16 Split | 8 |
| 6 | 100154 | Nut Plain 5/16-18 | 8 |
| 7 | 327908 | Coil, Steam RH | 1 |
| 8 | 102554 | Union 3/4 SST | 2 |
| 9 | 100548 | Locknut, 3/4NPT SST | 2 |
| 10 | 113918 | Nipple, Rtoe 3/4 x 1-3/4 | 2 |

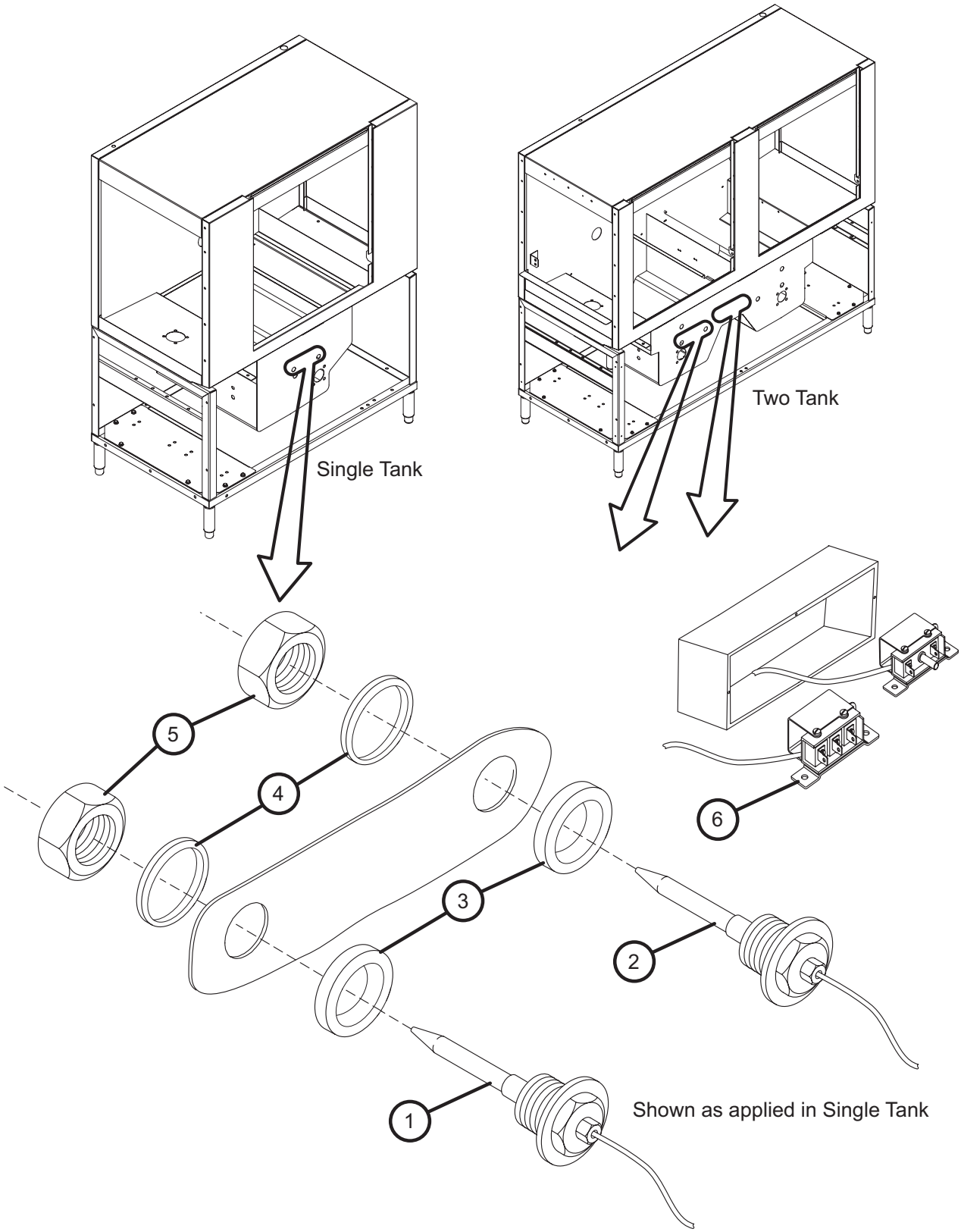


**Figure 34- Tank Thermostats**

## TANK THERMOSTATS

| Fig. 34 Item No. | Part No. | Part Description | Qty |
|---|---|---|---|
| 1 | 109069 | Thermostat w/capillary (Single) | 1 |
| | 109069 | Thermostat w/capillary (Two) | 2 |
| 2 | 113200 | Thermostat, Fixed Hi Limit (Single) | 1 |
| | 113200 | Thermostat, Fixed Hi Limit (Two) | 2 |
| 3 | 201041 | Washer 7/8 ID x 1/8 Thk (Single) | 2 |
| | 201041 | Washer 7/8 ID x 1/8 Thk (Two) | 4 |
| 4 | 109034 | Gasket. Plug (Single) | 2 |
| | 109034 | Gasket. Plug (Two) | 4 |
| 5 | 100547 | Locknut 1-1/2 NPT SST (Single) | 2 |
| | 100547 | Locknut 1-1/2 NPT SST (Two) | 2 |
| 6 | | Thermostat Bracket (Per Thermostat) | 1 |
| 7 | 323430 | Bracket, Thermostat (Not Shown)(Per Box) | 1 |

***Hi-limit is always located over the element inside of the tank.**

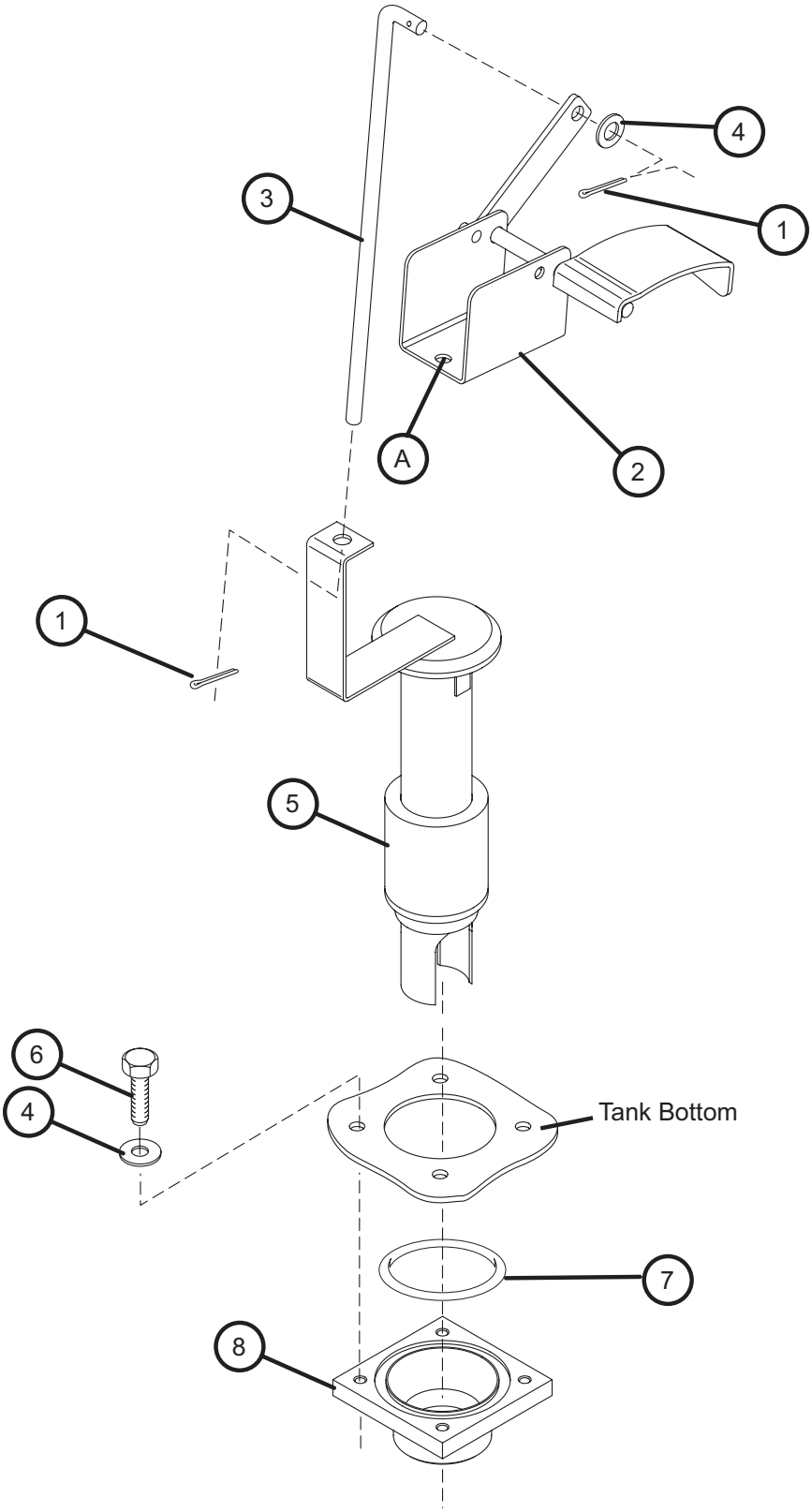


**Figure 35- Prewash Overflow Assembly**

## PREWASH OVERFLOW ASSEMBLY

| Fig. 35 Item No. | Part No. | Part Description | Qty |
|---|---|---|---|
| 1 | 108875 | Cotter Pin 3/32 x 1/2 Uneven | 2 |
| 2 | 328824 | Lever Drain Lift | 1 |
| 3 | 206417 | Rod, Overflow Lift 22PW | 1 |
| 4 | 106026 | Washer 1/4 x 5/8 x 1/6 SST | 5 |
| 5 | 328430 | Overflow PW Mtd | 1 |
| 6 | 100735 | Bolt 1/4-20 x 5/8 Hex Head | 4 |
| 7 | 111532 | O-ring, Drain 1.600 ID x .21 | 1 |
| 8 | 113559 | Drain , Flange Cast/Mach SST | 1 |

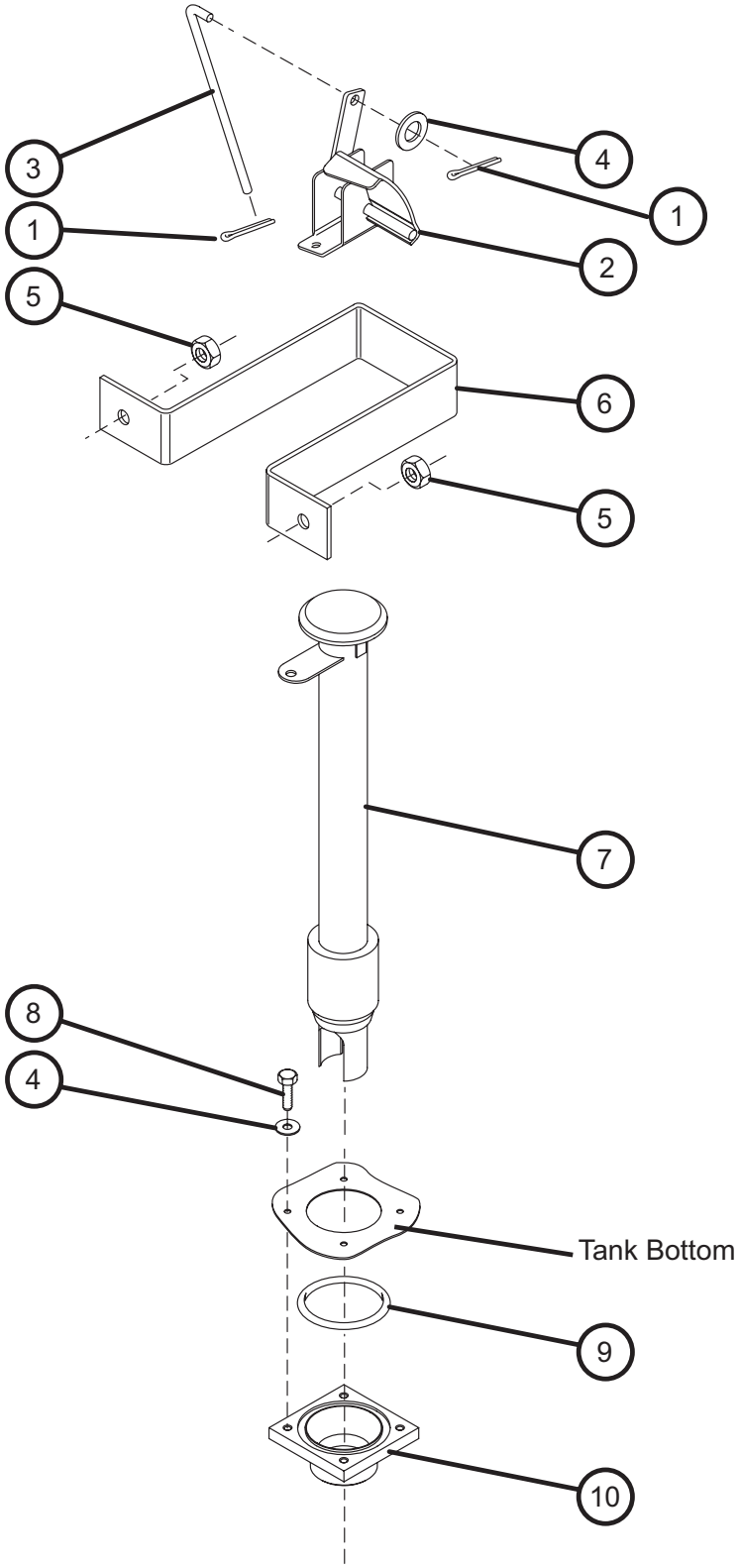


**Figure 36- Single Tank and Two Tank Overflow Assembly**

## SINGLE TANK AND TWO TANK OVERFLOW ASSEMBLY

| Fig. 36 Item No. | Part No. | Part Description | Qty |
|---|---|---|---|
| 1 | 108875 | Cotter Pin 3/32 x 1/2 Uneven | 2 |
| 2 | 328611 | Lever Drain Lift | 1 |
| 3 | 327850 | Rod, Overflow Lift | 1 |
| 4 | 106026 | Washer 1/4 x 5/8 x 1/6 SST | 5 |
| 5 | 107966 | Nut, Grip 10-32 w/Nylon Insert | 2 |
| 6 | 327975 | Bracket, Drain/Overflow | 1 |
| 7 | 414342 | Overflow (44Wash) | 1 |
| 7 | 414343 | Overflow (64 Rinse) | 1 |
| 8 | 100735 | Bolt 1/4-20 x 5/8 Hex Head | 4 |
| 9 | 111532 | O-ring, Drain 1.600 ID x .21 | 1 |
| 10 | 113559 | Drain , Flange Cast/Mach SST | 1 |

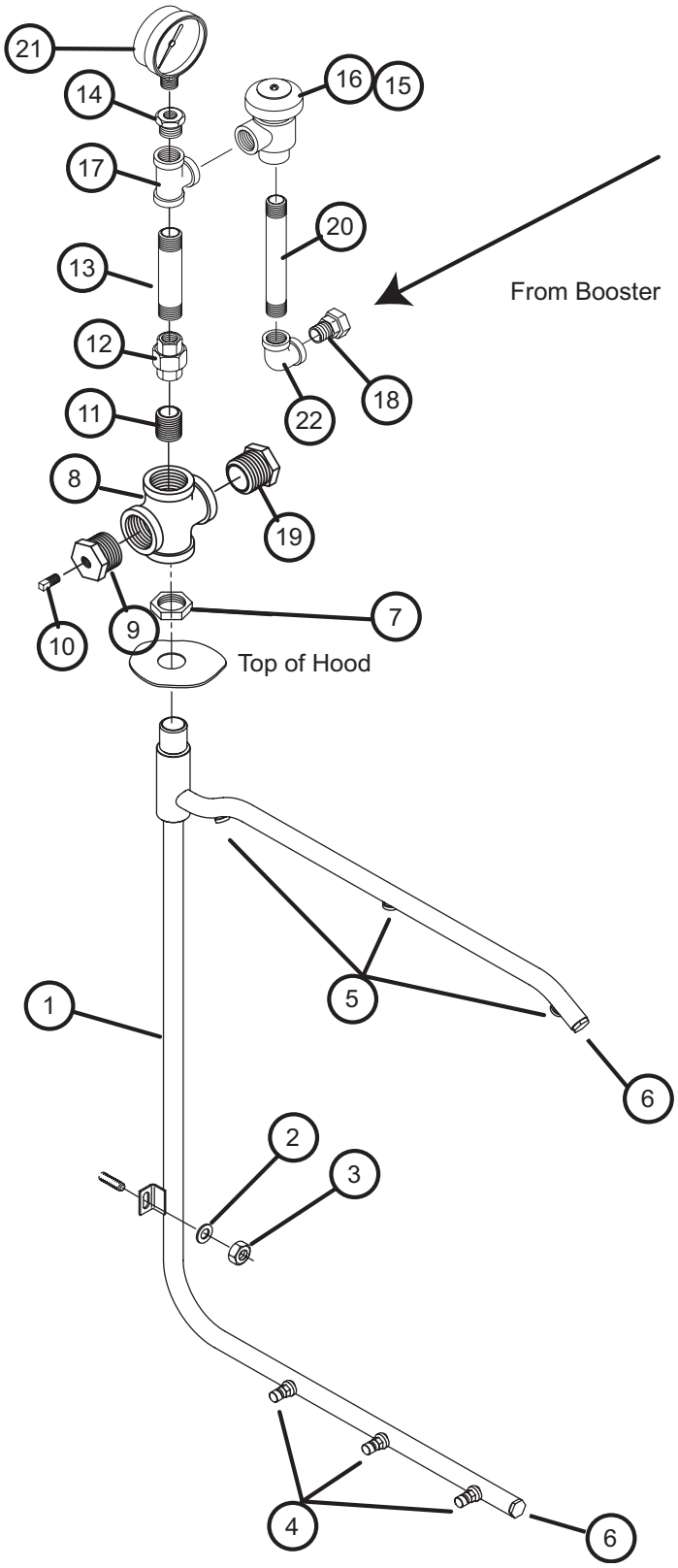


**Figure 37- Final Rinse Piping w/Booster**

## FINAL RINSE
## PIPING W/BOOSTER

| Fig. 37 Item No. | Part No. | Part Description | Qty |
|---|---|---|---|
| 1 | 113694 | Manifold 44/64 L-R Final Rinse | 1 |
| 2 | 106026 | Washer 1/4 x 5/8 x 1/16 SST | 1 |
| 3 | 107967 | Nut Grip 1/4-20 w/Nylon Insert | 1 |
| 4 | 112022 | Nozzle, Spray K-2 2T Rack | 3 |
| 4 | 107290 | Nozzle 1/8 HU-SS 8015 (44WS) | 3 |
| 5 | 107290 | Nozzle, Spray 8015 SST(Replaces 113709) | 3 |
| 5 | 0508376 | Nozzle Rinse SST Upper (WS only) | 3 |
| 6 | 113795 | Plug 11/16-16 Thread | 2 |
| -- | 108620 | Gasket Rinse Pipe (Not Shown) | 1 |
| 7 | 100156 | Locknut 3/4NPT Brass | 1 |
| 8 | 100599 | Cross 3/4" NPT Brass | 1 |
| 9 | 105976 | Bushing Red 3/4" NPT x 1/8" NPT Brass | 1 |
| 10 | 101259 | Plug 1/8" NPT Brass | 1 |
| 11 | 100184 | Nipple 3/4"NPT Close Brass | 1 |
| 12 | 100571 | Union 3/4"NPT Brass | 1 |
| 13 | 102470 | Nipple 3/4" NPT x 3" Lg Brass | 1 |
| 14 | 102388 | Bushing, Reducing 1/2"NPT x 1/4"NPT Brass | 1 |
| 15 | 104429 | Vacuum Breaker 3/4"NPT | 1 |
| 16 | 900837 | Kit*Repair, 3/4 Vacuum Breaker | A/R |
| 17 | 102525 | Tee, Red 3/4" x 1/2" x 3/4" NPT Brass | 1 |
| 18 | 109879 | Fitting Compression 3/4"NPT x 7/8" OD | 1 |
| 19 | 100171 | Bushing Red Face 3/4" NPT x 1/2 NPT Brass | 1 |
| 20 | 102490 | Nipple 1/4"NPT x 3-1/2" Lg Brass | 1 |
| 21 | 100135 | Pressure Gauge 0-60 PSI | 1 |
| 22 | 102442 | Elbow 3/4 x90° Brass | 1 |

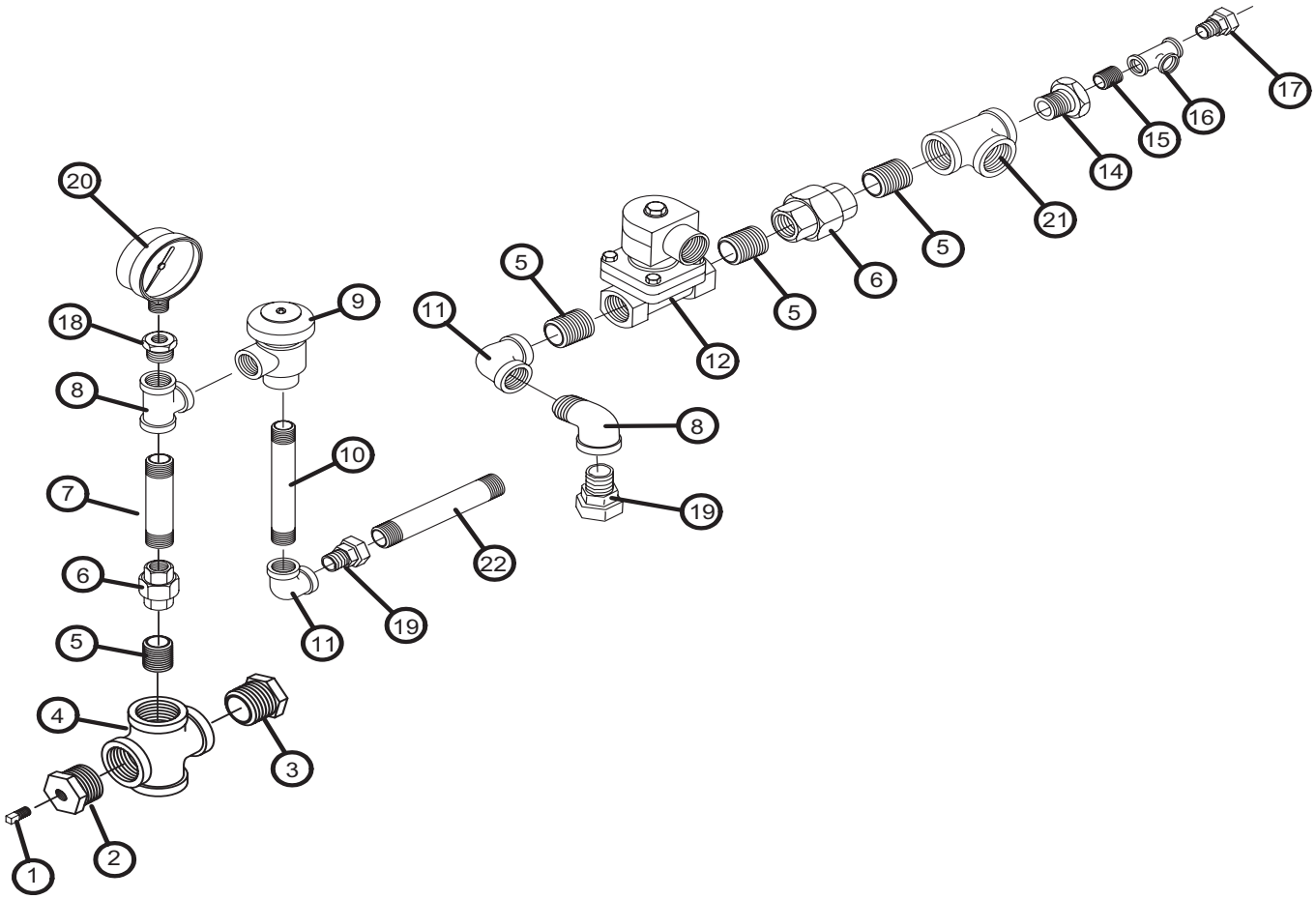


**Figure 38- Piping No Booster/Steam Booster**

## PIPING NO BOOSTER/STEAM BOOSTER

| Fig. 38 Item No. | Part No. | Part Description | Qty |
|---|---|---|---|
| 1 | 101259 | Plug, 1/8" NPT Brass | 1 |
| 2 | 105976 | Bushing, Red 3/4" NPT x 18" NPT Brass | 1 |
| 3 | 100171 | Bush Red Face 3/4" NPT x 1/2" NPT Brass | 1 |
| 4 | 100599 | Cross, 3/4"NPT Brass | 1 |
| 5 | 100184 | Nipple 3/4" NPT Close Brass | 4 |
| 6 | 100571 | Union 3/4" NPT Brass | 2 |
| 7 | 102470 | Nipple 3/4" x 3" Lg Brass | 2 |
| 8 | 102525 | Tee Red 3/4 x 1/2 x 3/4 Brass | 1 |
| 9 | 104429 | Vacuum Breaker 3/4" NPT Brass | 1 |
| -- | 900837 | Kit*Repair, Vacuum Breaker 3/4" | A/R |
| 10 | 102490 | Nipple 3/4" NPT x 3-1/2"Lg Brass | 1 |
| 11 | 102442 | Elbow 3/4"NPT x 90° Brass | 1 |
| 12 | 111437 | Valve, Solenoid 3/4" HW | 1 |
| -- | 109903 | Kit Repair 3/4 JE Stm-Wat | A/R |
| -- | 111472 | Replacement Coil 3/4" Solenoid Valve | A/R |
| 13 | 107418 | Tee, 3/4"NPT x 3/4"NPT x 1/4"NPT Brass | 1 |
| 14 | 102392 | Bushing Red 3/4" x 1/2" NPT | 1 |
| 15 | 100209 | Nipple 1/2" NPT Brass | 1 |
| 16 | 102514 | Tee 1/2" NPT Brass | 1 |
| 17 | 111250 | Fitting Compression 1/2 OD x 1/2 MPT | 1 |
| 18 | 102388 | Bushing, Reducing 1/2" NPT x 1/4" NPT Brass | 1 |
| 19 | 109879 | Fitting, Comp 7/8OD x 3/4 MPT Brass | 1 |
| 20 | 100135 | Pressure Gauge 0-60 PSI | 1 |
| 21 | 102521 | Tee 3/4" NPT Brass | 1 |
| 22 | 102490 | Nipple 3/4" NPT x 3-1/2"Lg Brass (w/Steam Booster Only) | 1 |

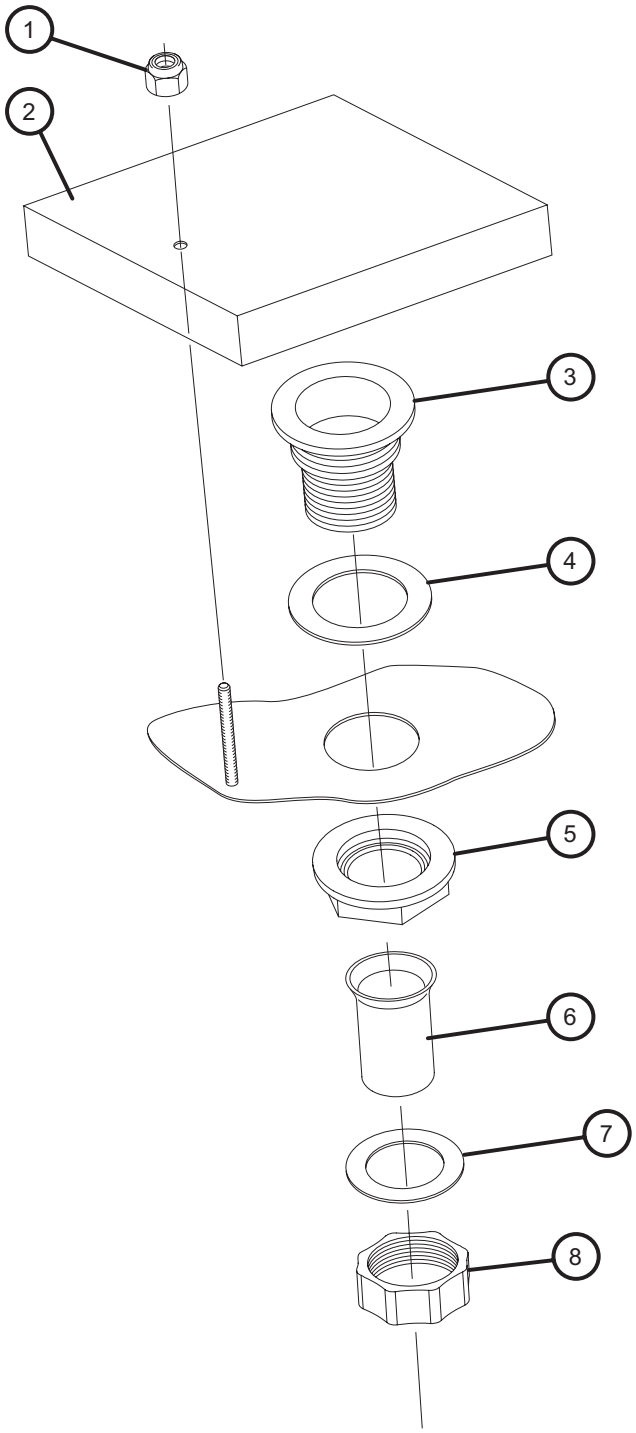


**Figure 39- Final Rinse Drain Assembly**

## FINAL RINSE DRAIN ASSEMBLY

| Fig. 39 Item No. | Part No. | Part Description | Qty |
|---|---|---|---|
| 1 | 100141 | Nut, Grip 1/4-20 | 1 |
| 2 | 305218 | Strainer, F/R Drain | 1 |
| 3 | 107342 | Basket, Drain | 1 |
| 4 | 107864 | Washer, Packing-Neoprene | 1 |
| 5 | 107345 | Nut Slip | 1 |
| 6 | 107473 | Tailpiece | 1 |
| 7 | 110245 | Washer Tailpiece | 1 |
| 8 | 110244 | Nut Slip, Tailpiece | 1 |

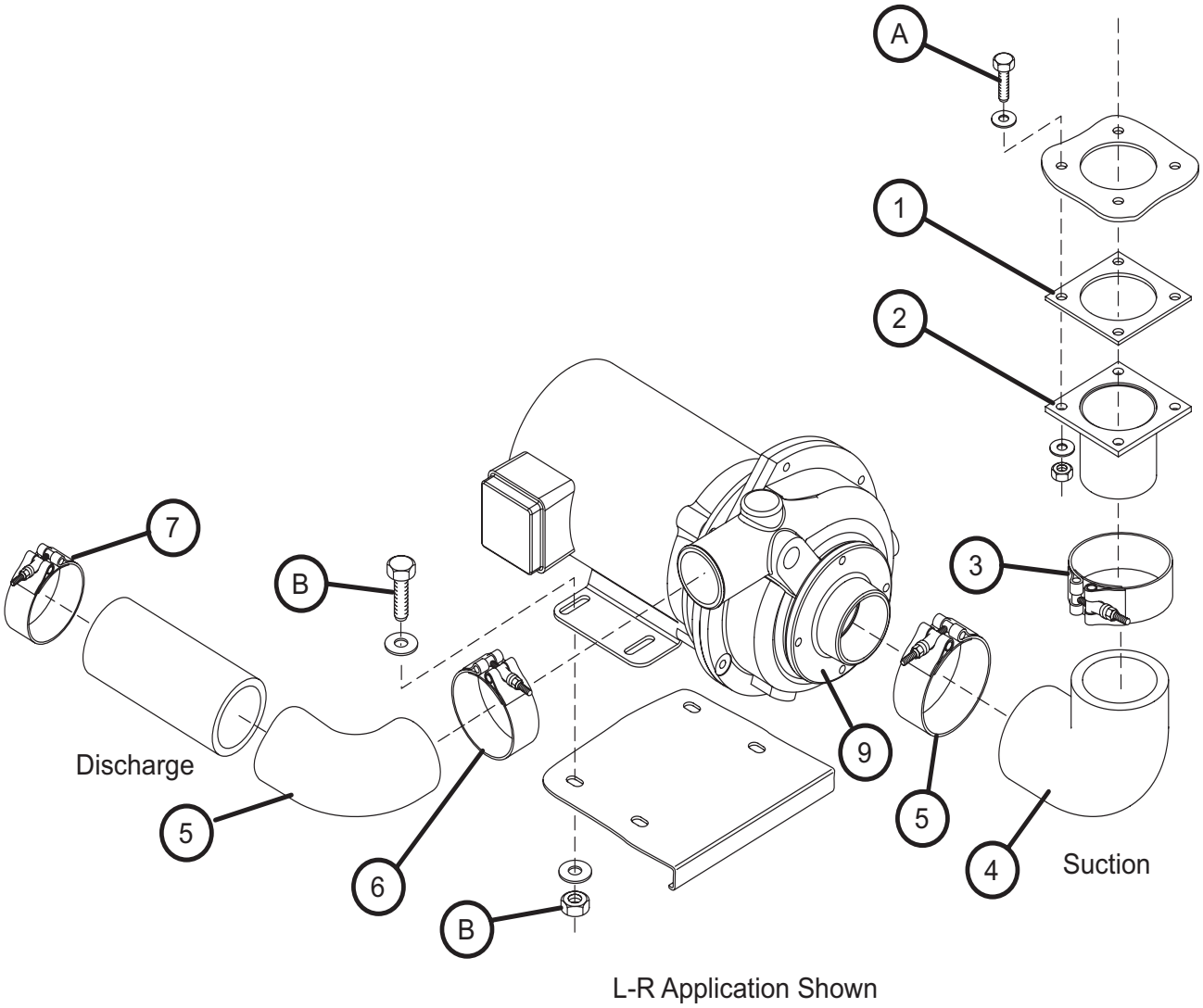


**Figure 40- Prewash Pump Suction/Discharge**

## PREWASH PUMP SUCTION/DISCHARGE

| Fig. 40 Item No. | Part No. | Part Description | Qty |
|---|---|---|---|
| 1 | 109568 | Gasket Pump Suction | 1 |
| 2 | 307995 | Flange, Suction | 1 |
| 3 | 104203 | Clamp, Hose M52 SST | 2 |
| 4 | 113717 | Hose, PW Suction | 1 |
| 5 | 113731 | Hose 22” PW Pump Discharge | 1 |
| 6 | 104165 | Clamp, Hose M40 SST | 1 |
| 7 | 111964 | Hose, Clamp Discharge | 1 |
| 8 | 311761 | Strainer, Pump Suction (Not Shown) | 1 |
| 9 | 112379 | Suction, Flange Machined | 1 |
| 10 | 112338 | Gasket Pump Suction Flange (Not Shown) | 1 |
| **A** | **Suction Flange Fasteners** | | |
| **B** | **Pump Fasteners** | | |
| | 100739 | Bolt 5/16-18 x 3/4 Hex Head SST | 4 |
| | 102376 | Washer 5/16 x 3/4 x 1/16 | 8 |
| | 109009 | Nut, Grip 5/16 w/Nylon Insert | 4 |

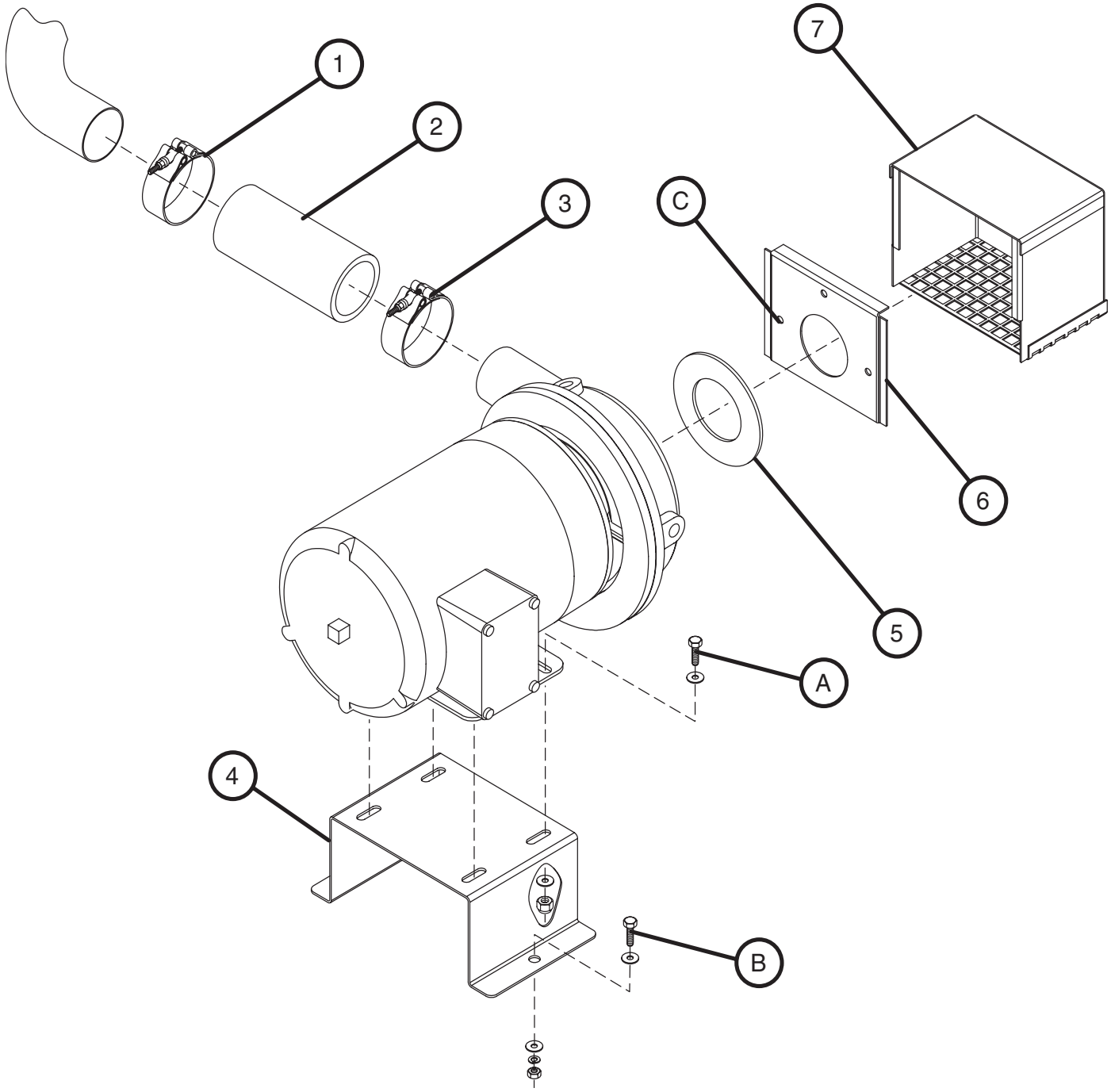


**Figure 41- Wash/Rinse Pump Suction/Discharge**

## WASH/RINSE PUMP SUCTION/DISCHARGE

| Fig. 41 Item No. | Part No. | Part Description | Qty |
|---|---|---|---|
| 1 | 110858 | Hose Clamp Pump Discharge | 1 |
| 2 | 112801 | Hose Discharge Pump | 1 |
| 3 | 111780 | Hose Clamp PP28 Discharge | 1 |
| 4 | 327870 | Pump Motor Base | 1 |
| 5 | 113538 | Gasket Pump Suction | 1 |
| 6 | 327906 | Plate, Pump Suction | 1 |
| 7 | 327905 | Hood Pump Suction | 1 |
| **A** | **Pump Base Fasteners** | | |
| | 100739 | Bolt 5/16-18 x 3/4 Hex Head SST | 4 |
| | 102376 | Washer 5/16 x 3/4 x 1/16 | 8 |
| | 109009 | Nut Grip 5/16 w/Nylon Insert | 4 |
| **B** | **Pump Fasteners** | | |
| | 100739 | Bolt 5/16-18 x 3/4 Hex Head SST | 4 |
| | 102376 | Washer 5/16 x 3/4 x 1/16 | 8 |
| | 109009 | Nut, Grip 5/16 w/Nylon Insert | 4 |

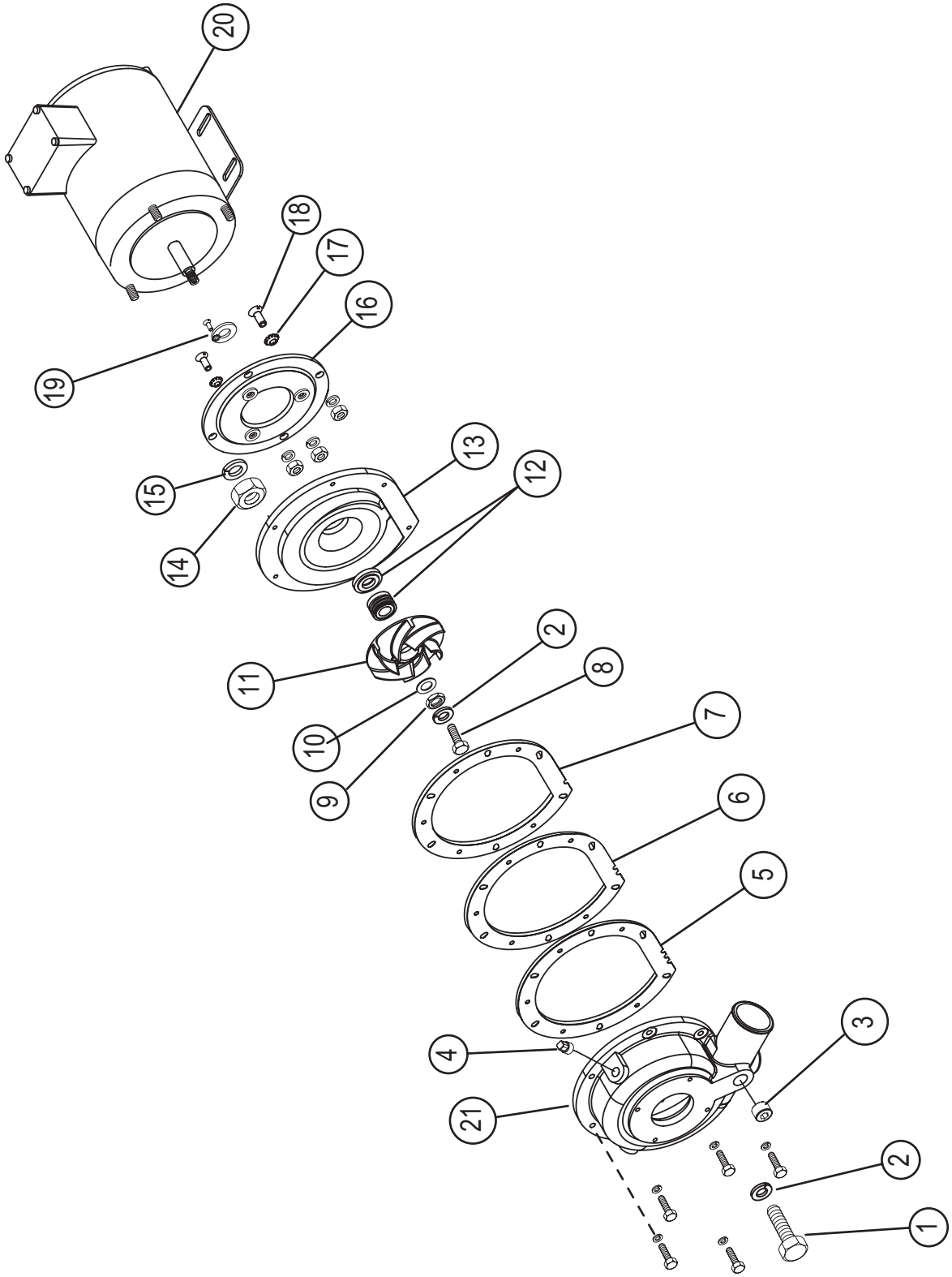


**Figure 42- Pump Assembly**

## PUMP ASSEMBLY

| Fig. 42 Item No. | Part No. | Part Description | Qty |
|---|---|---|---|
| 1 | 100736 | Screw 1/4-20 x 3/4 Hex Head | 6 |
| 2 | 106482 | Washer, Lock 1/4" | 10 |
| 3 | 113705 | Plug 1/2" NPT Countersunk Brass (2HP) (Wash/Rinse) | 1 |
| 3 | 102504 | Plug 1/2" NPT Brass Sq Head (1HP) (Prewash) | 1 |
| 4 | 102500 | Plug 1/4" NPT Brass | 2 |
| 5 | 111943 | Gasket .032 Thk (3 Notches) | 1 |
| 6 | 111942 | Gasket .015 Thk (2 Notches) | 1 |
| 7 | 111941 | Gasket .0085 Thk (1 Notch) | 1 |
| 8 | 100735 | Screw 1/4-20 x 5/8 Hex Head | 1 |
| 9 | 110247 | Nut Jam Hex 7/16-20 SST | 1 |
| 10 | 110248 | Washer .44OID x .043SST | 1 |
| 11 | 113118 | Impeller 1HP, SST Machined (Prewash) | 1 |
| | 113603 | Impeller 2HP, SST Machined (Wash/Rinse) | 1 |
| 12 | 111111 | Seal Pac Type 16 | 1 |
| 13 | 113635 | Flange, Jet Pump, SST NG | 1 |
| 14 | 107690 | Nut, Jam 3/8-16 | 4 |
| 15 | 106407 | Washer, Lock 3/8 Split | 4 |
| 16 | 204460 | Backing Plate 1Hp, 2HP, 3HP | 1 |
| 17 | 110270 | Washer, C-Sunk, Ex-Tooth SST | 3 |
| 18 | 100754 | Screw 10-32 x 1/2 Flat Head | 3 |
| 19 | 109654 | Slinger-Comenda | 1 |
| 20 | 110420 | Motor 1HP 208-240/460 60Hz/3Ph | A/R |
| | 113420 | Motor 2HP 208-240/460/60Hz/3Ph (Wash/Rinse) | 1 |
| 21 | 112380 | Pump Volute Machine (Prewash) | 1 |
| | 113634 | Pump Volute SST (Wash/Rinse) | 1 |
| --- | 112338 | Gasket, Pump Suction Flange (Not Shown) | 1 |
| | 451523 | Pump Assy 1HP 3Ph R-L Complete (Prewash) | A/R |
| | 414506 | Pump Assy 2HP LH Complete (Wash/Rinse) | A/R |
| | 414505 | Pump Assy 2HP RH Complete (Wash/Rinse) | A/R |
| | 900737 | Kit*Gaskets, Jet Pump (Includes Items 5-7) | A/R |
| | 900183 | Kit*Seal & 1HP Impeller (Includes Items 5-7, 11 and 12) | A/R |
| | 900861 | Kit*Seal & 2Hp Impeller (Includes Items 5-7, 11 and 12) | A/R |

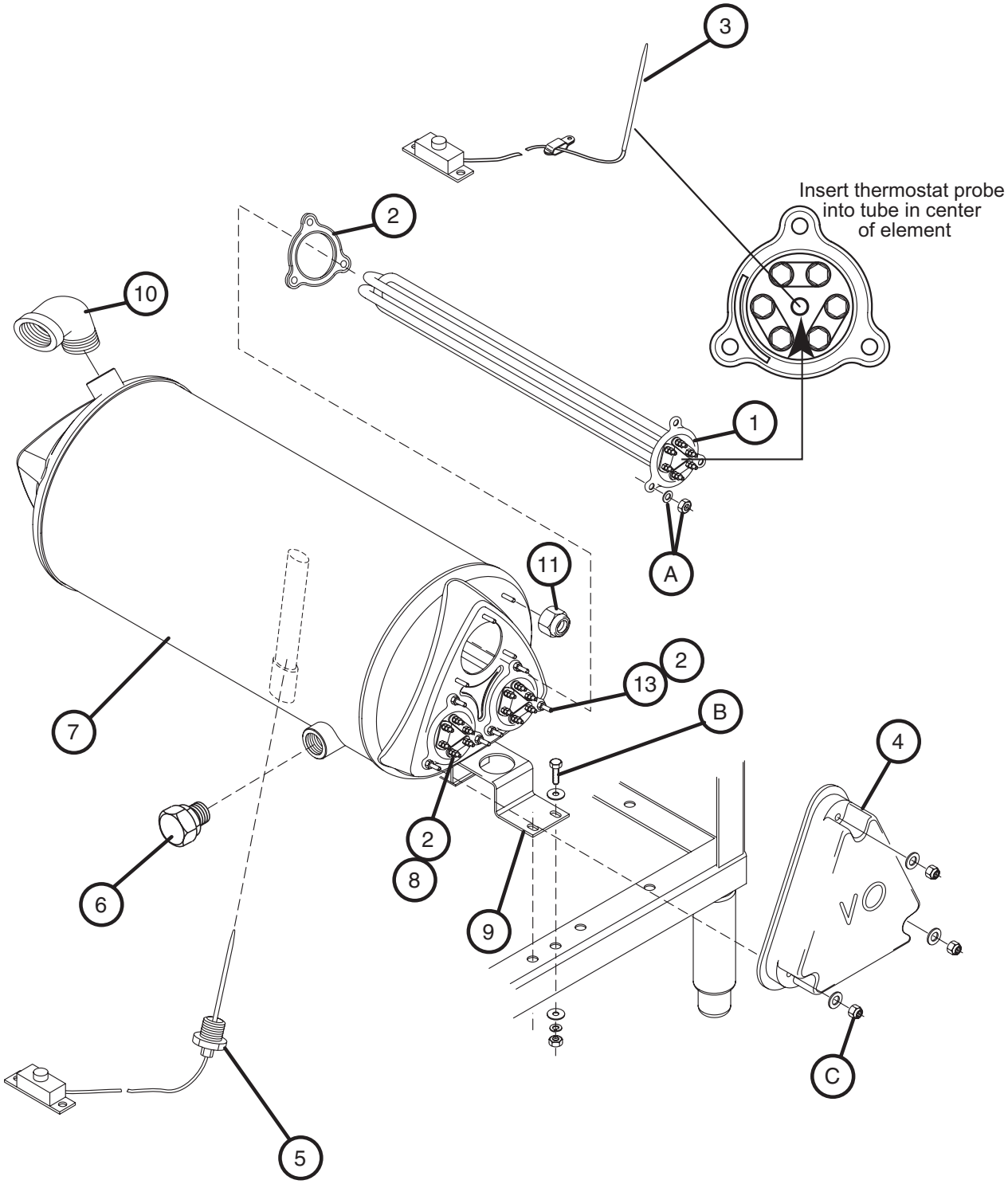


**Figure 43- 40°/60° Rise Electric Booster**

## 40°/60 RISE ELECTRIC BOOSTER

| Fig. 43 Item No. | Part No. | Part Description | Qty |
|---|---|---|---|
| 1 | 113690 | Heater, 12KW 208/60/3Ph (60°)(200-220V/1Ph & 3PH) | 1 |
| | 113885 | Heater, 12KW 220/230/240/380/415V 3Ph (60°)(230-240/1PH & 3PH) | 1 |
| | 113886 | Heater, 12KW 460/480V 3Ph (60°) | 1 |
| | 113887 | Heater, 12KW 575V 3Ph(60°) | 1 |
| | 111233 | Heater 7.5/10KW 240V 3Ph (40° Rise)(200-220,230-240V/1PH) | 1 |
| | 111232 | Heater, 10KW 208V 3PH (40° Rise)(220-220/3PH) | 1 |
| | 111234 | Heater, 10KW 480V 3PH (40° Rise) (480V 3PH) | 1 |
| | 111383 | Heater, 10KW 575V 3PH (40° Rise) (480V 3PH) | 1 |
| 2 | 109985 | Seal, Electric Heater Flange | 3 |
| 3 | 113724 | Thermostat w/Capillary 210°F | 1 |
| 4 | 108576 | Cover, Booster No Cutout | 1 |
| 5 | 109069 | Thermostat w/ Capillary | 1 |
| 6 | 102505 | Plug 3/4" NPT Brass | 1 |
| 7 | 414331 | Tank Booster (40° Rise) | 1 |
| 8 | 113690 | Heater, 12KW 208/60/3Ph (40°)(200-220V/1Ph & 3PH) | 1 |
| | 113885 | Heater, 12KW 220/230/240/380/415V 3Ph (40°)(230-240/1PH & 3PH) | 1 |
| | 113886 | Heater, 12KW 460/480V 3Ph (40°)(460-480°/3PH) | 1 |
| | 112059 | Heater, 12KW 208V 3Ph (60°Rise)(200-220V/1PH & 3PH) | 2 |
| | 111334 | Heater 12KW 240V 3Ph (60° Rise) (230-240/1PH & 3PH) | 2 |
| | 112060 | Heater 12KW 460/480V 3Ph(60°Rise)(460-480/3PH) | 2 |
| | 112061 | Heater 12KW 575V 3Ph (60° Rise) | 2 |
| 9 | 328254 | Bracket, Front Booster | 1 |
| 10 | 113706 | Elbow Street 3/4 x 45 Brass (44) | 1 |
| 11 | 108954 | Nut Grip 6-32 w/Nylon Insert | 1 |
| 12 | 328048 | Clamp, Thermostat Booster Tank (Not shown, use with item 11) | 1 |
| 13 | 111235 | Heater, 5/6.6KW 208/240 (40° Rise)(200-220V/1PH & 3PH) | 1 |
| | 111236 | Heater 5KW 240V 3PH (40° Rise)(230-240V1PH & 3PH) | 1 |
| | 111237 | Heater 5KW 480V 3PH (40° Rise) (460-480V/3PH) | 1 |
| | 111384 | Heater 5KW 575V 3PH (40° Rise) (460-480V/3PH) | 1 |
| **A** | **Element Fasteners (Qty per Element)** | | |
| | 100003 | Nut Plain 1/4-20 | 9 |
| | 106482 | Washer Lock 1/4 Split | 9 |
| **B** | **Booster Tank Fasteners** | | |
| | 100739 | Bolt 5/16-18 x 3/4 Hex Head SST | 4 |
| | 106013 | Washer Lock 5/16 Split | 4 |
| | 109205 | Nut, Grip 5/16 w/Nylon Insert | 4 |
| **C** | **Element Cover Fasteners** | | |
| | 107697 | Nut Grip 1/4-20 w/Nylon insert | 3 |
| | 106026 | Washer Flat 1/4" | 3 |

# Thermostat Placement

- Select correct element numbers from chart above for specific voltage
- Limiting thermostat **113724** Should be inserted into center of element **113690** (use voltage specific element). Thermostat should bottom out in the tube approximately 12" deep. The exposed capillary leads should be routed under cover **108576** and fastened to the weld stud in the upper right side of the booster can with the clip **328048** and nut.
- Regulating thermostat **109069** should be inserted into the tube on the bottom of the booster can until it hits the opposite wall approximately 9" then pulled back 1" and fastened in place.

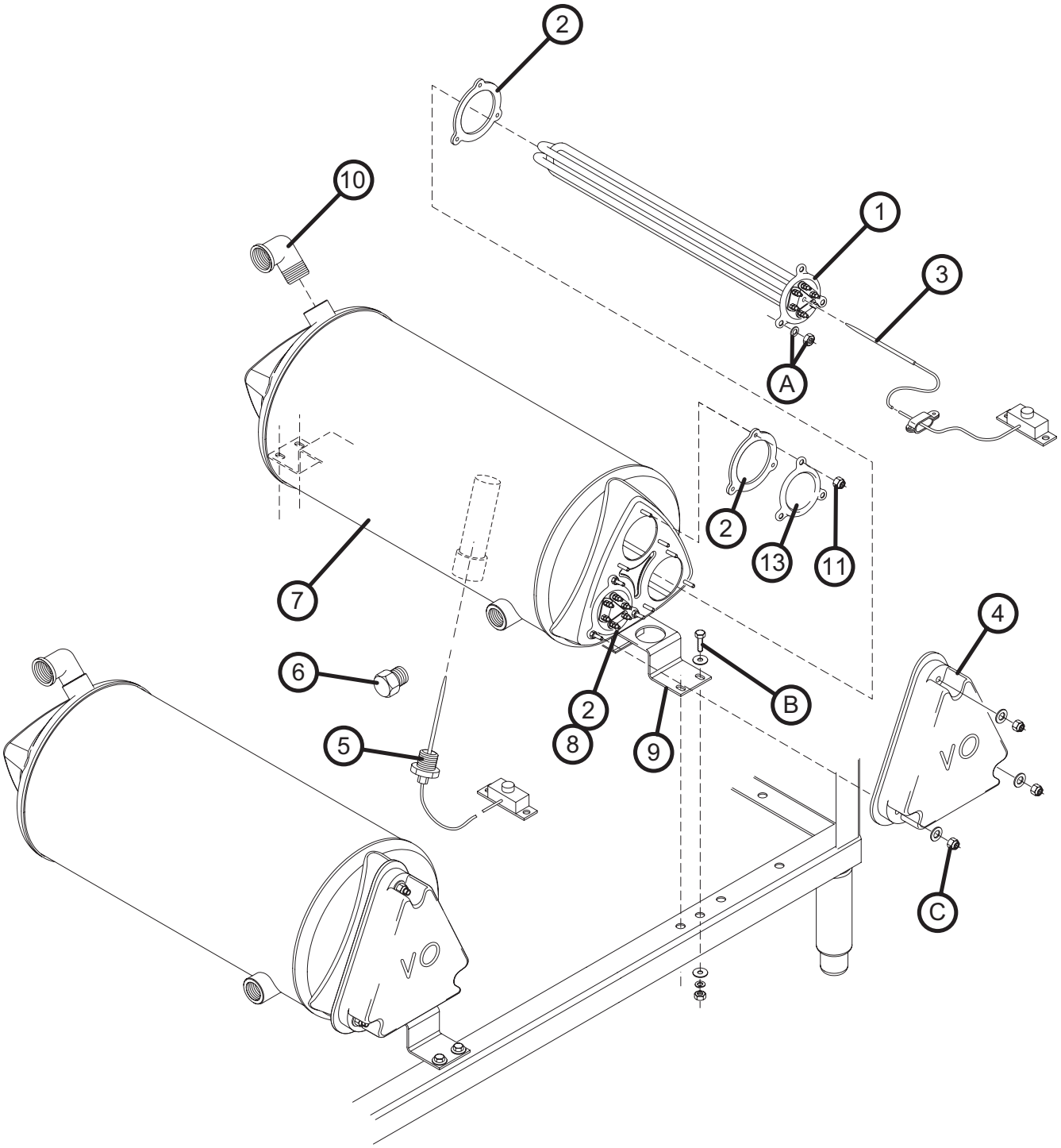


**Figure 44- 70° Rise Electric Booster**

## 70° RISE ELECTRIC BOOSTER

| Fig. 44 Item No. | Part No. | Part Description | Qty |
|---|---|---|---|
| 1 | 113690 | Heater, 12KW 208/60/3Ph (200-220V/1Ph & 3PH) | 1 |
| | 113885 | Heater, 12KW 220/230/240/380/415V 3Ph (230-240/1PH & 3PH) | 1 |
| | 113886 | Heater, 12KW 460/480V 3Ph (60°) | 1 |
| | 113887 | Heater, 12KW 575V 3Ph(60°) | 1 |
| 2 | 109985 | Seal, Electric Heater Flange | 6 |
| 3 | 113724 | Thermostat w/Capillary 210°F | 1 |
| 4 | 108576 | Cover, Booster No Cutout | 2 |
| 5 | 109069 | Thermostat w/ Capillary | 2 |
| 6 | 102505 | Plug 3/4" NPT Brass (Not Shown) (On Opposite Side) | 2 |
| 7 | 414331 | Tank Booster (40° Rise) | 2 |
| 8 | 112059 | Heater, 12KW 208V 3Ph (200-220V/1PH & 3PH) | 2 |
| | 111334 | Heater 12KW 240V 3Ph (230-240/1PH & 3PH) | 2 |
| | 112060 | Heater 12KW 460/480V 3Ph(460-480/3PH) | 2 |
| | 112061 | Heater 12KW 575V 3Ph | 2 |
| 9 | 328254 | Bracket, Front Booster | 2 |
| 10 | 113706 | Elbow Street 3/4 x 45 Brass (44) | 2 |
| 11 | 108954 | Nut Grip 6-32 w/Nylon Insert | 2 |
| 12 | 328048 | Clamp, Thermostat Booster Tank (Not shown, use with item 11) | 2 |
| 13 | 109458 | Flange Heater Bloc/off | 2 |
| **A** | **Element Fasteners (Qty per Element)** | | |
| | 100003 | Nut Plain 1/4-20 | 9 |
| | 106482 | Washer Lock 1/4 Split | 9 |
| **B** | **Booster Tank Fasteners (Qty per Booster)** | | |
| | 100739 | Bolt 5/16-18 x 3/4 Hex Head SST | 4 |
| | 106013 | Washer Lock 5/16 Split | 4 |
| | 109205 | Nut, Grip 5/16 w/Nylon Insert | 4 |
| **C** | **Element Cover Fasteners (Qty per Cover)** | | |
| | 107697 | Nut Grip 1/4-20 w/Nylon insert | 3 |
| | 106026 | Washer Flat 1/4" | 3 |

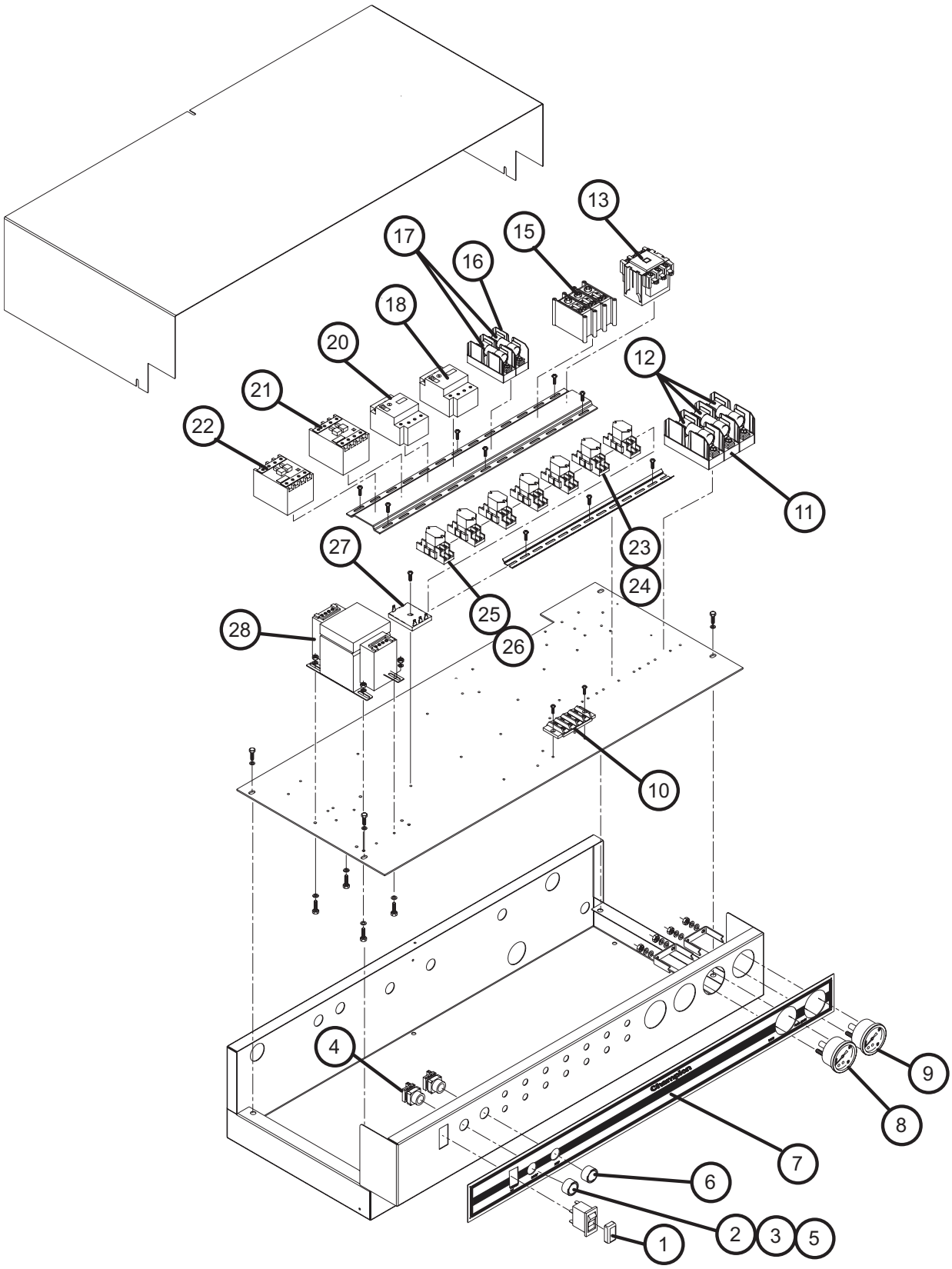


**Figure 45- Control Cabinet**

## CONTROL CABINET

| Fig. 42 Item No. | Part No. | Part Description | Qty |
|---|---|---|---|
| 1 | 111980 | Circuit Breaker On/Off 5amp | 1 |
| 2 | 113814 | Switch Pushbutton Green Illuminated | 1 |
| 3 | 113752 | Mounting Base Led Green | 1 |
| 4 | 113812 | Contact Block NO W/O Base | 1 |
| 5 | 113140 | Boot, Silicone Pushbutton | 2 |
| 6 | 900726 | Red Pushbutton (Includes (1) of Item 5) | 1 |
| | Includes the following: | | |
| | 111615 | Red Push Button | 1 |
| | 111616 | Contact Block NC w/holder | 1 |
| 7 | 113684 | Decal 44/54 Cabinet (Single Tank) | 1 |
| 7 | 113710 | Decal 40/60/64 Cabinet (Two Tank) | 1 |
| 8 | 107440 | Thermometer 8ft Flanged (Wash) (Single Tank) | 1 |
| 8 | 107440 | Thermometer 8ft Flanged (Rinse) (Two Tank) | 1 |
| 9 | 113622 | Thermometer 4Ft Gas Filled (Final Rinse) | 1 |
| 10 | 100294 | Terminal Block 6PT | 1 |
| -- | 112296 | Label Detergent/Rinse Signal (Not Shown) | 1 |
| 11 | 108424 | Fuse Block 600V/100A 3P (208-220V/1PH)(230-240V/1PH) | 1 |
| 11 | 180171 | Fuse Block 600V/60A 3P (208-220V/3PH)(230-240V/3PH) | 1 |
| 11 | 180171 | Fuse Block 600V/60A 3P (230-240V/3PH)(Two Tank) | 2 |
| 11 | 111135 | Fuse Block 600V/30A 3P (460-480V/3PH)(Single Tank) | 1 |
| 11 | 111135 | Fuse Block 600V/30A 3P (460-480V/3PH) (Two Tank) | 2 |
| 12 | 108448 | Fuse T 90A 250V Fast Act (208-220V/1PH) | 2 |
| 12 | 180059 | Fuse T 80A 250V Fast Act (230-240V/1Ph) | 2 |
| 12 | 180175 | Fuse J 50A 600V Fast Act (208-220V/3PH) | 3 |
| 12 | 180175 | Fuse J 50A 600V Fast Act (230-240V/1PH)(Two Tank Only) | 2 |
| 12 | 180174 | Fuse J 45A 600V Fast Act (230-240V/3PH) | 3 |
| 12 | 180243 | Fuse J 25A 600V Fast Act (460-480V/3PH) | 3 |
| 12 | 111231 | Fuse T 90A 250V Fast Act (208-220V/1PH)(Two Tank Only) | 2 |
| 12 | 180176 | Fuse J 60A 600V Fast Act (208-220V/1PH)(Two Tank Only) | 2 |
| 12 | 180172 | Fuse J 35A 600V Fast Act (208-220V/3PH)(Two Tank Only) | 3 |
| 12 | 111683 | Fuse J 30A 600V Fast Act (230-240V/3PH)(Two Tank Only) | 3 |
| 12 | 112062 | Fuse J 20A 600V Fast AcT (460-480V/3PH)(Two Tank Only) | 3 |
| 13 | 111231 | Contactor 75FLA 3p ( Tank Heat) (208-220V/1PH)(230-240V/1PH) | 1 |
| 13 | 111827 | Contactor 60FLA 3P (Tank Heat) (208-220V/3PH), (230-240V/3PH), (460-480V/3PH) | 1 |
| 13 | 111827 | Contactor 60FLA 3P (Tank Heat)(208-220V/3PH)(Two Tank Only) | 2 |
| 14 | 103310 | Wire Lug QA-2 (Not Shown) | 1 |
| 15 | 111833 | Terminal Block 185A 3Pole 600V | 1 |
| 16 | 106402 | Fuse Block 600V/30A 2P (208-220V/1PH & 3PH)(230-240V/1PH) | 1 |
| 17 | 111821 | Fuse ATDR-3 600V Time Delay (208-220V/1PH & 3PH), (230-240V/1PH & 3PH), (460-480V/3PH) | 2 |
| 18 | 111630 | Starter Mtr 13.0-18.0 (Wash) (208-220V/1PH),(230/240V/1PH) (Single Tank) | 1 |
| 18 | 111630 | Starter Mtr 13.0-18.0 (Wash/Rinse) (208-220V/1PH), (230/240V/1PH)(Two Tank) | 2 |
| 18 | 110807 | Starter Mtr OL GV2-M14 W/Aux (Wash) (208-220V/3PH), (230-240V/3PH) (Single Tank) | 1 |
| 18 | 110807 | Starter Mtr OL GV2-M14 W/Aux (Wash/Rinse) (208-220V/3PH), (230-240V/3PH) (Two Tank) | 2 |
| 18 | 110805 | Starter Mtr 2.5-4.0A w/Auxillary(Wash) (460-480V/3PH) (Single Tank) | 1 |

## CONTROL CABINET

| Fig. 42 Item No. | Part No. | Part Description | Qty |
|---|---|---|---|
| 19 | 113161 | Starter Mtr OL 9.0-14.0 Amps (Prewash)(1HP) (208-220V/1PH) (230-240V/1PH)(Not Shown) | 1 |
| 19 | 110806 | Starter Mtr OL GV2-M10 w/Auxillary (Prewash) (1HP) (208-220V/3PH), (230-240/V3PH)(Not Shown) | 1 |
| 19 | 110804 | Starter Mtr OL GV2-M07 w/Auxillary (Prewash (1HP) (460-480V/3PH) (Not Shown) | 1 |
| 20 | 110803 | Starter Mtr OL GV2-M06 w/Aux (Drive) (208-220V/1PH & 3PH) (230-240V/1PH & 3PH) | 1 |
| 20 | 110801 | Starter Mtr OL GV2-M04 w/Auxillary (Drive)(460-480V/3PH) | 1 |
| --- | 111639 | Auxillary Switch (Attached to Overload) (Not Shown) | A/R |
| 21 | 108122 | Contactor 12A (Motor)(Prewash,Wash, Rinse)(208-220V/3PH), (230-240V/3PH), (460-480V/3PH) | 1 |
| 21 | 109582 | Contactor 25A (Motor) (Wash/Rinse) (208-220V/1PH)(230-240V/1PH) | 1 |
| 22 | 108122 | Contactor 12A (Motor) (Drive) | 1 |
| 23 | 111036 | Relay Socket (Single/Two Tank) | 6 |
| 23 | 113036 | Relay Socket (w/Prewash) | 7 |
| 24 | 111068 | Relay 2PDT 10A 120VAC (Single/Two Tank) | 6 |
| 24 | 111068 | Relay 2PDT 10A 120VAC (w/Prewash) | 7 |
| --- | 113271 | Suppressor, ARC (Single/Two Tank) (Not Shown) | 5 |
| --- | 113271 | Suppressor, ARC (w/Prewash) (Not Shown) | 6 |
| 25 | 112415 | Relay Socket 3Pole | 1 |
| 26 | 112382 | Relay 3PDT 10A 120VAC | 1 |
| 27 | 113782 | Timer Fixed 90 Seconds | 1 |
| 28 | 109064 | Transformer 250VA 240/480, 230/460 | 1 |

This Page
Intentionally
Left
Blank

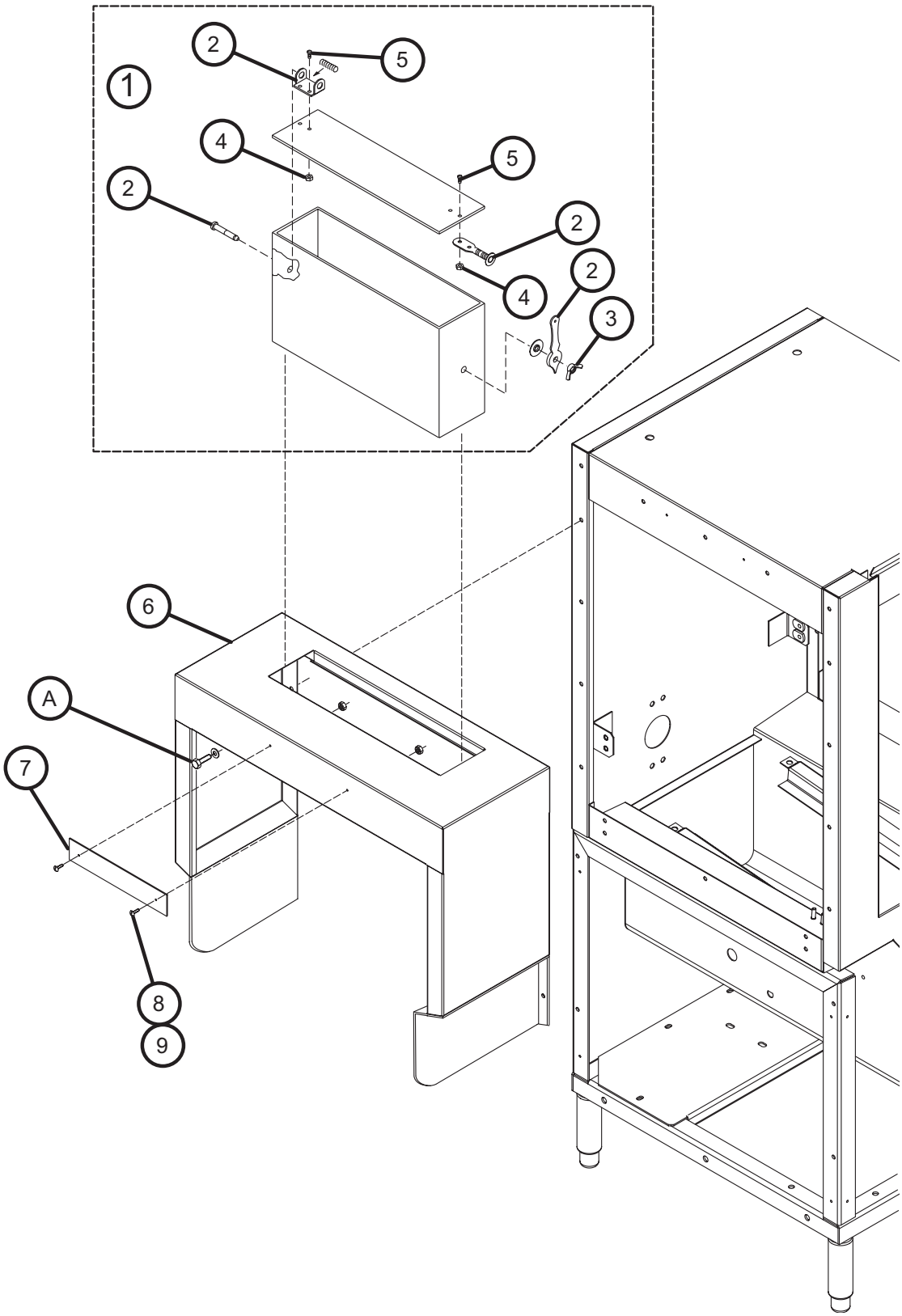


**Figure 46- New Style Vent Cowls**
**(Shown Mounted to Prewash)**

## NEW STYLE VENT COWLS

| Fig. 46 Item No. | Part No. | Part Description | Qty |
|---|---|---|---|
| 1 | 401487 | Vent Stack Assembly (Includes Items 2-5) | 2 |
| 2 | 201589 | Regulator Assembly | 2 |
| 3 | 112258 | Nut Wing 1/4-20 SST | 2 |
| 4 | 108954 | Nut, Grip 6-32 w/Nylon Insert | 4 |
| 5 | 104883 | Screw 6-32 x 3/8" Round Head | 4 |
| 6 | 328344 | Vent Cowl | 2 |
| 7 | 109158 | Nameplate “Champion” | 2 |
| 8 | 107015 | Screw 4-40 x 1/4 Round Head | 4 |
| 9 | 107016 | Nut Grip 4-40 w/Nylon Insert | 4 |
| **A** | **Vent Cowl Fasteners (Qty per Cowl)** | | |
| | 100734 | Bolt 1/4-20 x 1/2 Hex Head SST | 4 |
| | 106482 | Nut Grip 1/4-20 SST | 4 |

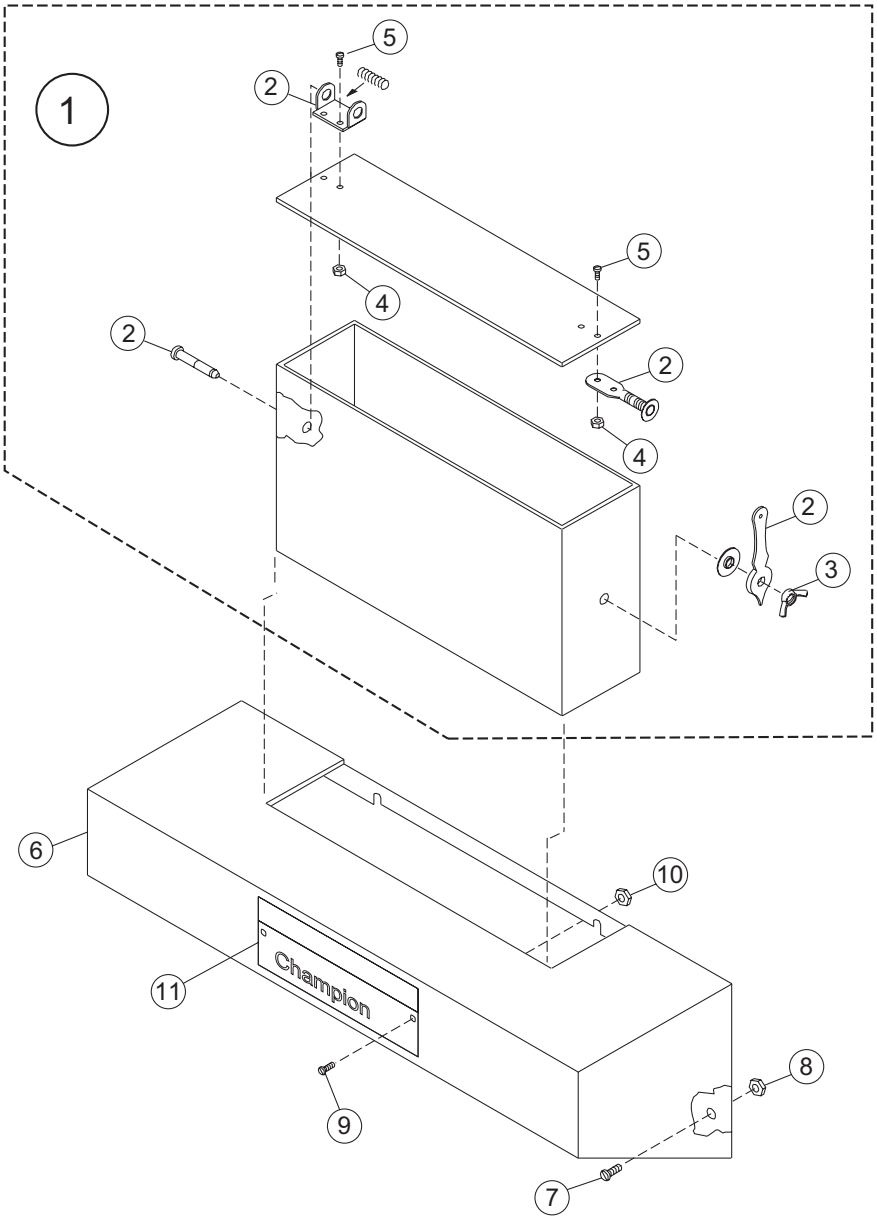


**Figure 47- Standard Vent Cowls**

## STANDARD VENT COWLS

| Fig. 47 Item No. | Part No. | Part Description | Qty |
|---|---|---|---|
| 1 | 401487 | Vent Stack Assembly (Includes items 2-5) | 2 |
| 2 | 201589 | Regulator Assembly | 2 |
| 3 | 112258 | Nut, Wing 1/4-20 SST | 2 |
| 4 | 108954 | Nut, Grip 6-32 w/Nylon Insert | 8 |
| 5 | 104883 | Screw 6-32 x 3/8 Round Head | 8 |
| 6 | 307228 | Vent Hood | 2 |
| 7 | 100734 | Belt 1/4-20 x 1/2" Hex Head | 4 |
| 8 | 100141 | Nut Grip 1/4-20 | 8 |
| 9 | 107015 | Screw 4-40 x 1/4 Round Head | 4 |
| 10 | 107016 | Nut Grip 4-40 w/Nylon Insert | 4 |
| 11 | 109518 | Nameplate “Champion” | 1 |
| -- | 401889-S | Vent Hood Assembly (Includes Items 1-10) | |

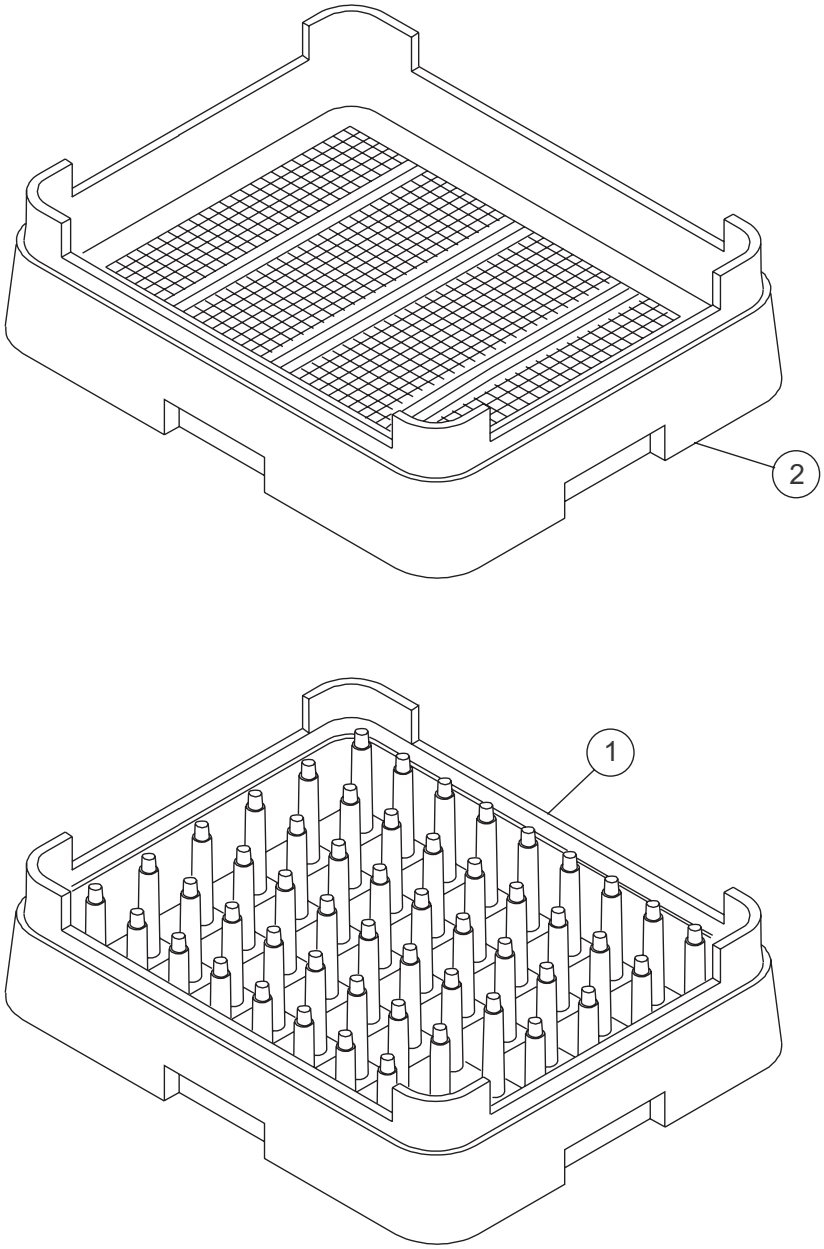


**Figure 48- Dish Racks**

## DISH RACKS

| Fig. 48 Item No. | Part No. | Part Description | Qty |
|---|---|---|---|
| 1 | 101285 | Rack Peg | 1 |
| 2 | 101273 | Rack Combination | 1 |

This Page
Intentionally
Left
Blank

# ELECTRICAL SCHEMATICS

| MODELS COVERED BY THIS DRAWING | |
|---|---|
| 44 | |
| 44 LT | |
| 54 | |
| | |

NOTES:

1. 7CR IS USED ONLY WITH A TABLE LIMIT SWITCH OR MRA TABLE. WHEN A TABLE LIMIT SWITCH IS NOT USED INSTALL JUMPER.
2. WHEN TABLE LIMIT SWITCH OR MRA IS USED, CONNECT SWITCHES BETWEEN WIRES 6 AND 44 ON THE TERMINAL BLOCK IN THE PANEL.
3. USED FOR MACHINE RUNNING SIGNAL.
4. DRIVE MOTOR CONNECTED SINGLE PHASE FOR 200-240 VOLT MODELS.
5. ON MODELS WITH SIDE LOADER OPTION DRIVE MOTOR CONTACTOR 1M IS CONNECTED TO WIRE #45 INSTEAD OF WIRE #11.
6. ON MODELS WITH MULTIPLE ELECTRIC CONNECTIONS, MAKE HEATER POWER CONNECTIONS AT THE HEATER FUSE BLOCK.

| | |
|---|---|
| 1CR | RACK SWITCH RELAY |
| 2CR | FINAL RINSE SWITCH RELAY |
| 3CR | DOOR SAFETY SWITCH RELAY |
| 5CR | WASH FILL RELAY |
| 7CR | TABLE LIMIT SWITCH RELAY |
| 1M | DRIVE MOTOR CONTACTOR |
| 1MOL | DRIVE MOTOR OVERLOAD |
| 3M | WASH MOTOR CONTACTOR |
| 3MOL | WASH MOTOR OVERLOAD |
| 5M | BLOWER MOTOR CONTACTOR |
| 5MOL | BLOWER MOTOR OVERLOAD |
| AS | ARC SUPPRESSOR |
| BC- | BOOSTER CONTACTOR/STEAM VALVE |
| BDV | BLOWER DOOR SWITCH |
| BR | BOOSTER RELAY |
| BWR.SW. | BLOWER SWITCH |
| CR | HOLD-IN RELAY |
| FRSW | FINAL RINSE SWITCH |
| FU | FUSE/FUSE BLOCK |
| FV | FILL VALVE |
| HC- | HEAT CONTACTOR/STEAM VALVE |
| HLTS | HIGH LIMIT THERMOSTAT |
| JSW | JAM SWITCH |
| PCB | POWER SWITCH/CIRCUIT BREAKER |
| RSW | RACK SWITCH |
| RV | RINSE VALVE |
| T1 | CONTROL TRANSFORMER |
| TLS | TABLE LIMIT SWITCH |
| TR1 | IDLE PUMP TIMER |
| TS | THERMOSTAT |
| W | WASH DOOR SWITCH |
| WFSW | WASH TANK FLOAT SWITCH |

DIAGRAM STATE
POWER OFF
DOORS CLOSED
TANKS EMPTY

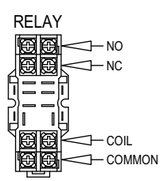


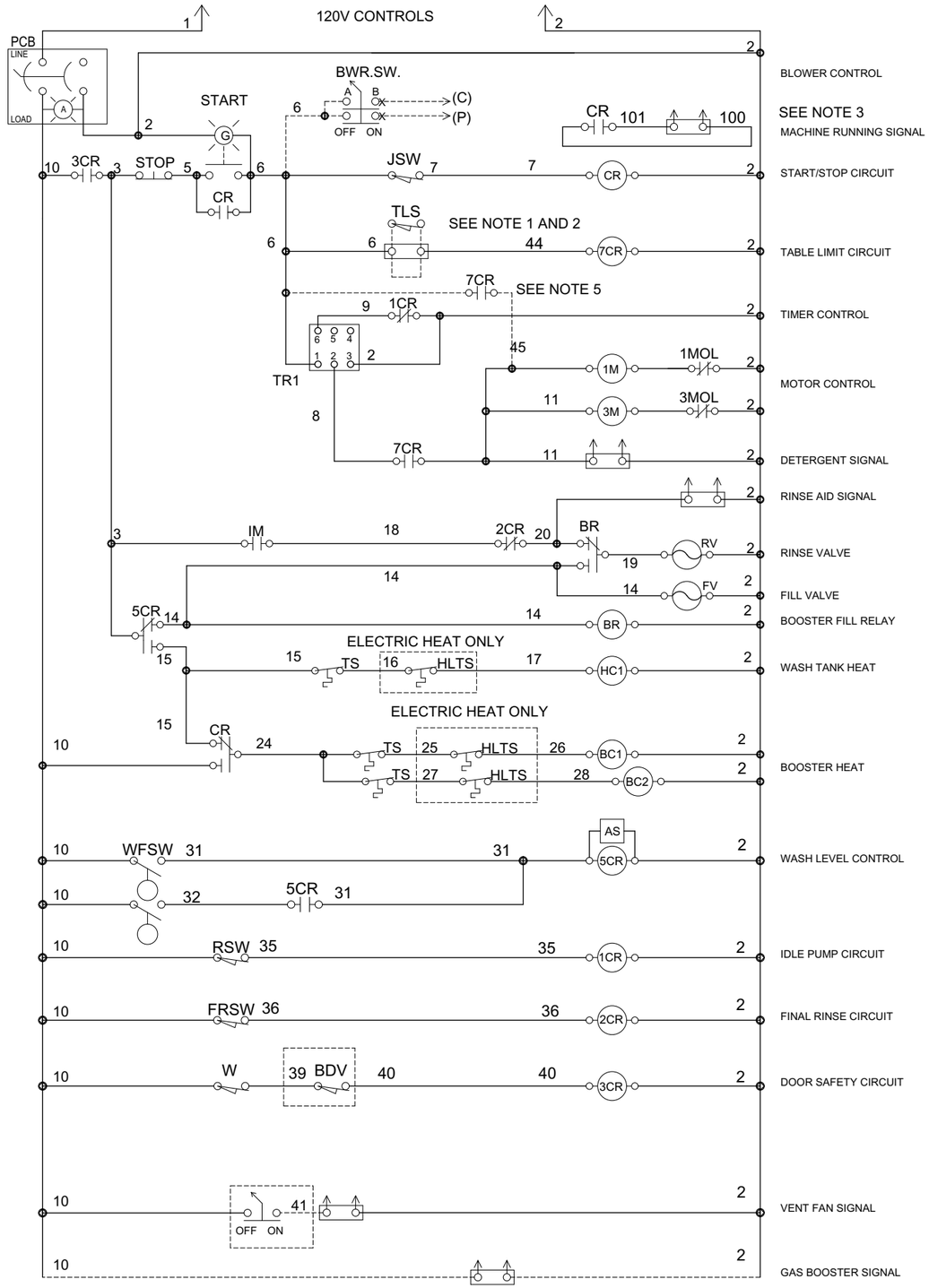


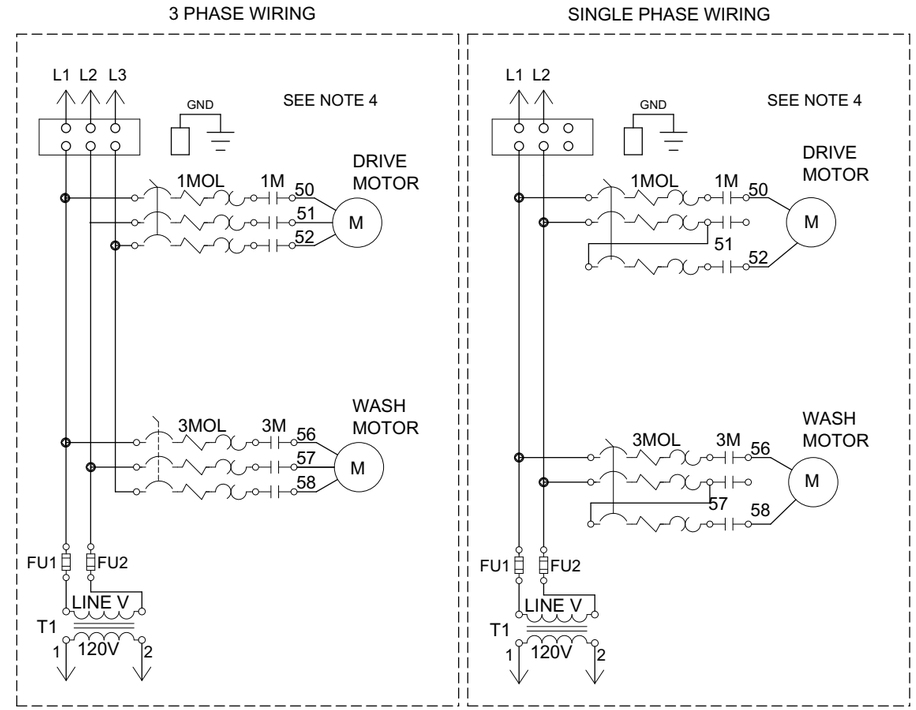


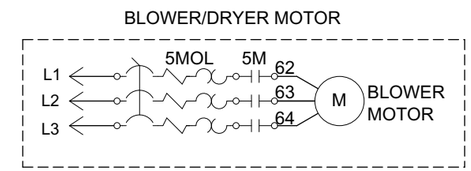


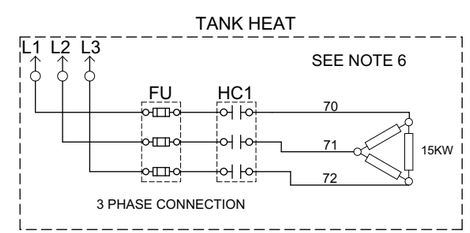


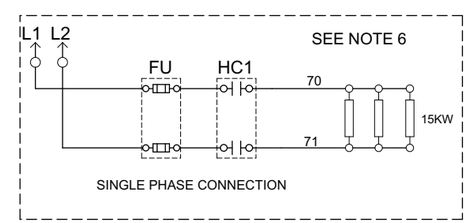


CUSTOMER TO SUPPLY RATED VOLTAGE/PHASE/Hz, AS SPECIFIED PER ORDER,TO DISCONNECT SWITCH. ALL POWER SUPPLIED TO EACH CONNECTION POINT MUST COMPLY WITH ALL LOCAL ELECTRIC CODES.

| DR.BY | J.MCALLISTER | SCALE | NONE |
|---|---|---|---|
| DATE | 17OCT03 | SHEET 1 OF 1 | |

| REV. | DESCRIPTION | DATE | BY |
|---|---|---|---|
| A | REVISED NOTES TO INCLUDE TLS WIRE LOCATION | 9JUL04 | JAM |
| B | REMOVED JUMPER FOR BR RELAY | 9AUG04 | JAM |
| C | ADDED NOTE 5 ADDED WIRING FOR SIDE LOADER | 27SEP04 | JAM |

| REV. | DESCRIPTION | DATE | BY |
|---|---|---|---|
| D | MOVED TABLE LIMIT CIRCUIT | 1DEC04 | JAM |
| E | MOVED RINSE AID CIRCUIT | 5JAN05 | JAM |
| | | | |

**Champion**
The Dishwashing Machine Specialists

SINGLE TANK RACK CONVEYOR
STEAM/ELECTRIC HEAT

B 701820 REV. E

| MODELS COVERED BY THIS DRAWING | |
|---|---|
| 64 | |
| 72 | |
| 84 | |
| | |

NOTES:

1. 7CR IS USED ONLY WITH A TABLE LIMIT SWITCH OR MRA TABLE. WHEN A TABLE LIMIT SWITCH IS NOT USED INSTALL JUMPER.
2. WHEN TABLE LIMIT SWITCH OR MRA IS USED, CONNECT SWITCHES BETWEEN WIRES 6 AND 44 ON TERMINAL BLOCK IN PANEL.
3. USED FOR MACHINE RUNNING SIGNAL.
4. DRIVE MOTOR CONNECTED SINGLE PHASE FOR 200-240 VOLT MODELS.
5. ON MODELS WITH SIDE LOADER OPTION DRIVE MOTOR CONTACTOR 1M IS CONNECTED TO WIRE #45 INSTEAD OF WIRE #11.
6. ON MODELS WITH MULTIPLE ELECTRIC CONNECTIONS, MAKE HEATER POWER CONNECTIONS AT THE HEATER FUSE BLOCK.

| | |
|---|---|
| 1CR | RACK SWITCH RELAY |
| 2CR | FINAL RINSE SWITCH RELAY |
| 3CR | DOOR SAFETY SWITCH RELAY |
| 4CR | RINSE FILL RELAY |
| 5CR | WASH FILL RELAY |
| 7CR | TABLE LIMIT SWITCH RELAY |
| 1M | DRIVE MOTOR CONTACTOR |
| 1MOL | DRIVE MOTOR OVERLOAD |
| 3M | WASH MOTOR CONTACTOR |
| 3MOL | WASH MOTOR OVERLOAD |
| 4M | RINSE MOTOR CONTACTOR |
| 4MOL | RINSE MOTOR OVERLOAD |
| 5M | BLOWER MOTOR CONTACTOR |
| 5MOL | BLOWER MOTOR OVERLOAD |
| AS | ARC SUPPRESSOR |
| BC- | BOOSTER CONTACTOR/STEAM VALVE |
| BDV | BLOWER DOOR SWITCH |
| BR | BOOSTER RELAY |
| BWR.SW. | BLOWER SWITCH |
| CR | HOLD-IN RELAY |
| FRFV | FINAL RINSE FILL VALVE |
| FRSW | FINAL RINSE SWITCH |
| FU_ | FUSE |
| HC- | HEAT CONTACTOR/STEAM VALVE |
| HLTS | HIGH LIMIT THERMOSTAT |
| JSW | JAM SWITCH |
| PCB | POWER SWITCH/CIRCUIT BREAKER |
| R | RINSE DOOR SWITCH |
| RFSW | RINSE TANK FLOAT SWITCH |
| RSW | RACK SWITCH |
| T1 | CONTROL TRANSFORMER |
| TLS | TABLE LIMIT SWITCH |
| TR1 | IDLE PUMP TIMER |
| TS | THERMOSTAT |
| W | WASH DOOR SWITCH |
| WFSW | WASH TANK FLOAT SWITCH |
| WFV | WASH FILL VALVE |

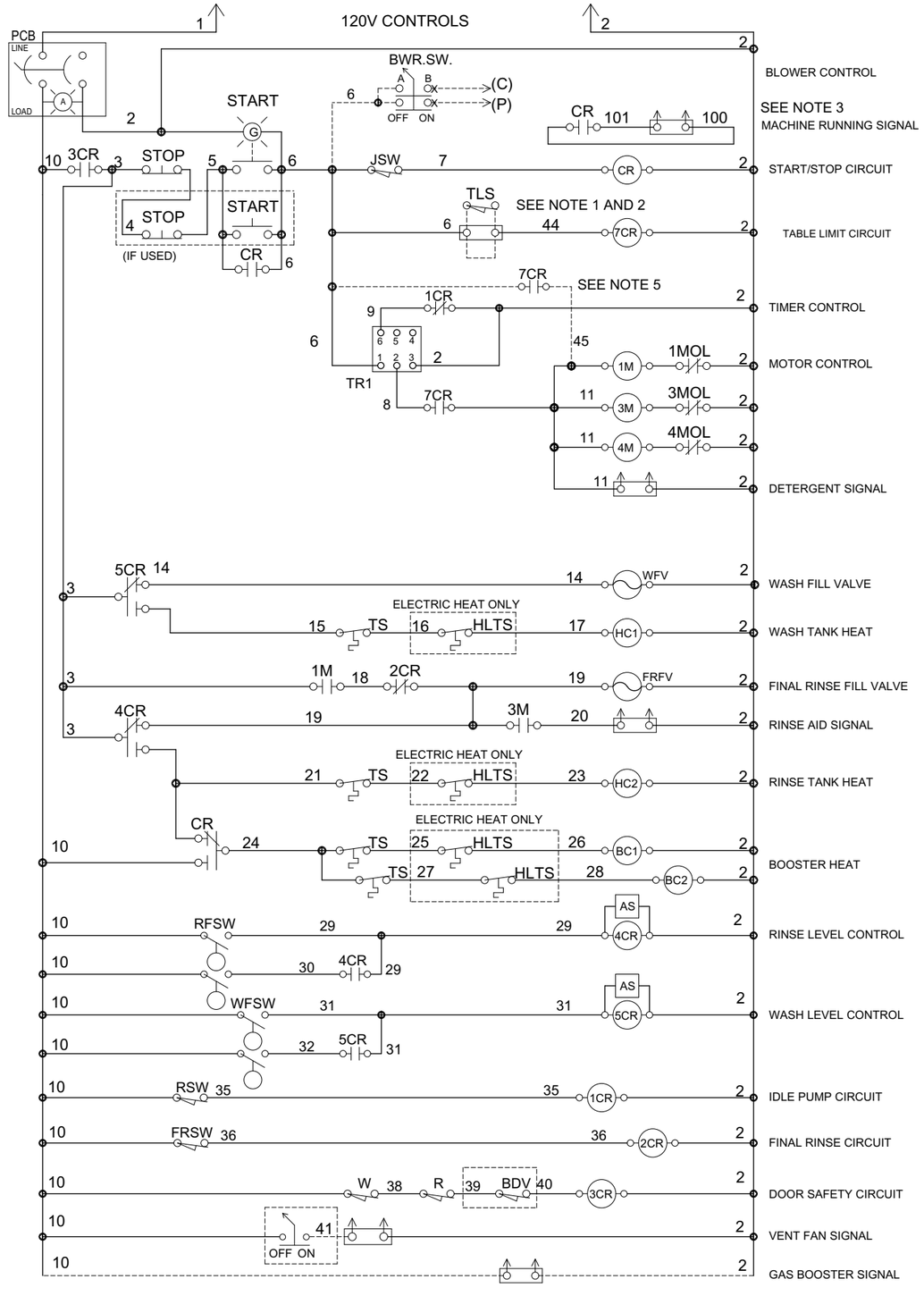


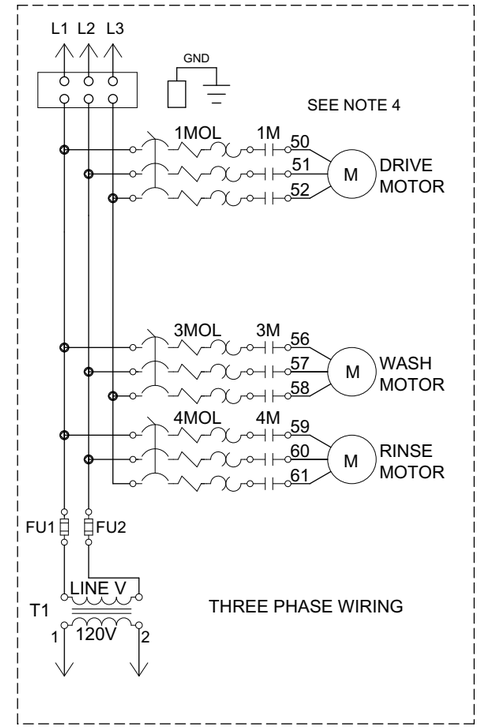


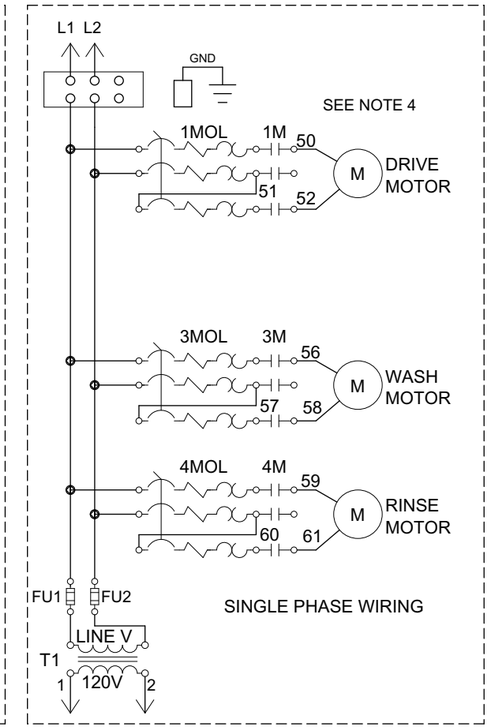


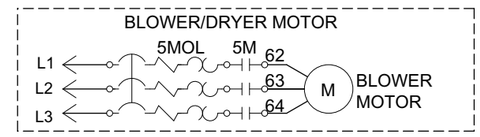


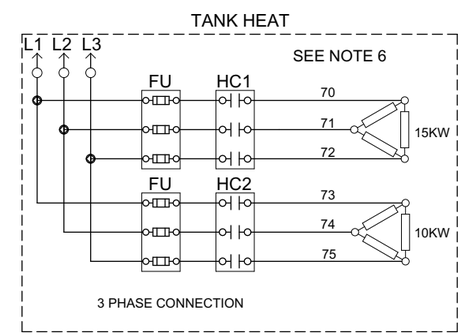


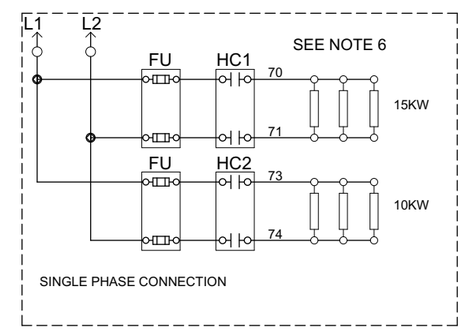


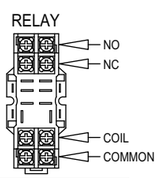


DIAGRAM STATE
POWER OFF
DOORS CLOSED
TANKS EMPTY

CUSTOMER TO SUPPLY RATED VOLTAGE/PHASE/Hz, AS SPECIFIED PER ORDER,TO DISCONNECT SWITCH, ALL POWER SUPPLIED TO EACH CONNECTION POINT MUST COMPLY WITH ALL LOCAL ELECTRIC CODES.

| DR.BY | J.MCALLISTER | SCALE | NONE |
|---|---|---|---|
| DATE | 21OCT03 | SHEET | 1 OF 1 |

| REV. | DESCRIPTION | DATE | BY |
|---|---|---|---|
| A | REVISED NOTES TO INCLUDE TLS WIRE LOCATION | 14JUN04 | JAM |
| B | ADDED NOTE 5 ADDED WIRING FOR SIDELOADER | 27SEP04 | JAM |
| C | MOVED TABLE LIMIT SWITCH CIRCUIT | 02DEC04 | JAM |

| REV. | DESCRIPTION | DATE | BY |
|---|---|---|---|
| | | | |
| | | | |

**Champion**
The Dishwashing Machine Specialists

TWO TANK RACK CONVEYOR
STEAM/ELECTRIC HEAT

B 701827 REV. C

| MODELS COVERED BY THIS DRAWING | |
|---|---|
| 66 PW | 80 LT HDPW |
| 70 FFPW | 76 PW |
| 80 HDPW | 80 FFPW |
| 66 LT PW | 90 HDPW |
| 70 LT FFPW | |

NOTES:

1. 7CR IS USED ONLY WITH A TABLE LIMIT SWITCH OR MRA TABLE. WHEN A TABLE LIMIT SWITCH IS NOT USED INSTALL JUMPER.
2. WHEN TABLE LIMIT SWITCH OR MRA IS USED, CONNECT SWITCHES BETWEEN WIRES 6 AND 44 ON TERMINAL BLOCK IN PANEL.
3. USED FOR MACHINE RUNNING SIGNAL.
4. DRIVE MOTOR CONNECTED SINGLE PHASE FOR 200-240 VOLT MODELS.
5. ON MODELS WITH SIDE LOADER OPTION DRIVE MOTOR CONTACTOR 1M IS CONNECTED TO WIRE #45 INSTEAD OF WIRE #11.
6. ON MODELS WITH MULTIPLE ELECTRIC CONNECTIONS, MAKE HEATER POWER CONNECTIONS AT THE HEATER FUSE BLOCK.

| | |
|---|---|
| 1CR | RACK SWITCH RELAY |
| 2CR | FINAL RINSE SWITCH RELAY |
| 3CR | DOOR SAFETY SWITCH RELAY |
| 5CR | WASH FILL RELAY |
| 6CR | PREWASH FILL RELAY |
| 7CR | TABLE LIMIT SWITCH RELAY |
| 1M | DRIVE MOTOR CONTACTOR |
| 1MOL | DRIVE MOTOR OVERLOAD |
| 2M | PREWASH MOTOR CONTACTOR |
| 2MOL | PREWASH MOTOR OVERLOAD |
| 3M | WASH MOTOR CONTACTOR |
| 3MOL | WASH MOTOR OVERLOAD |
| 5M | BLOWER MOTOR CONTACTOR |
| 5MOL | BLOWER MOTOR OVERLOAD |
| AS | ARC SUPPRESSOR |
| BC- | BOOSTER CONTACTOR/STEAM VALVE |
| BDV | BLOWER DOOR SWITCH |
| BR | BOOSTER RELAY |
| BWR.SW. | BLOWER SWITCH |
| CR | HOLD-IN RELAY |
| CWTS | COLD WATER THERMOSTAT |
| CWV | COLD WATER VALVE |
| FRSW | FINAL RINSE SWITCH |
| FU | FUSE/FUSE BLOCK |
| FV | FILL VALVE |
| HC- | HEAT CONTACTOR/STEAM VALVE/ HOT WATER PUMP |
| HLTS | HIGH LIMIT THERMOSTAT |
| JSW | JAM SWITCH |
| PCB | POWER SWITCH/CIRCUIT BREAKER |
| PW | PREWASH DOOR SWITCH |
| PWFV | PREWASH FILL VALVE |
| PWFSW | PREWASH TANK FLOAT SWITCH |
| RSW | RACK SWITCH |
| RV | RINSE VALVE |
| T1 | CONTROL TRANSFORMER |
| TLS | TABLE LIMIT SWITCH |
| TR1 | IDLE PUMP TIMER |
| TS | THERMOSTAT |
| W | WASH DOOR SWITCH |
| WFSW | WASH TANK FLOAT SWITCH |

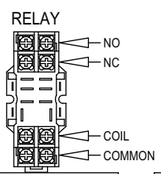


DIAGRAM STATE
POWER OFF
DOORS CLOSED
TANKS EMPTY

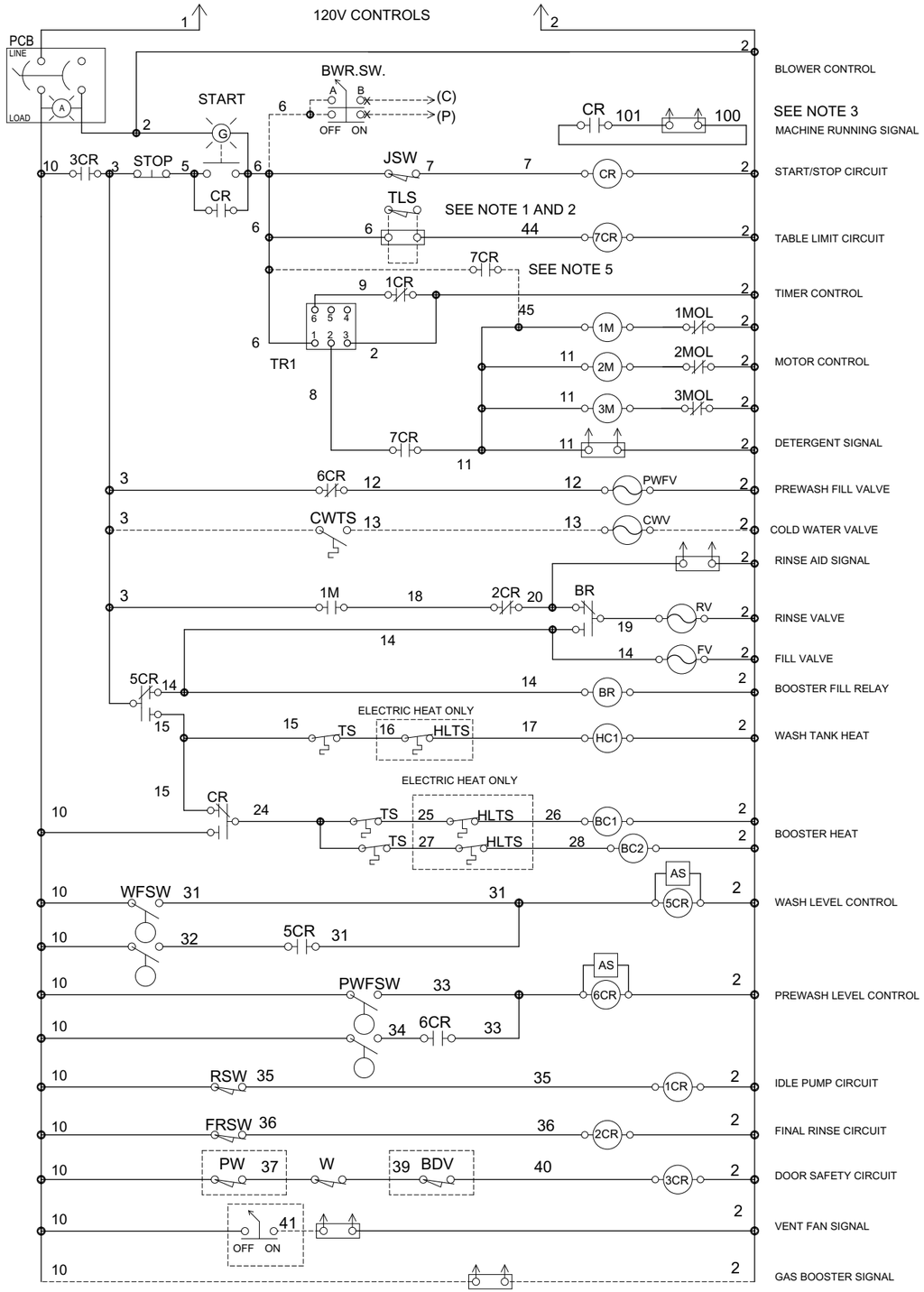


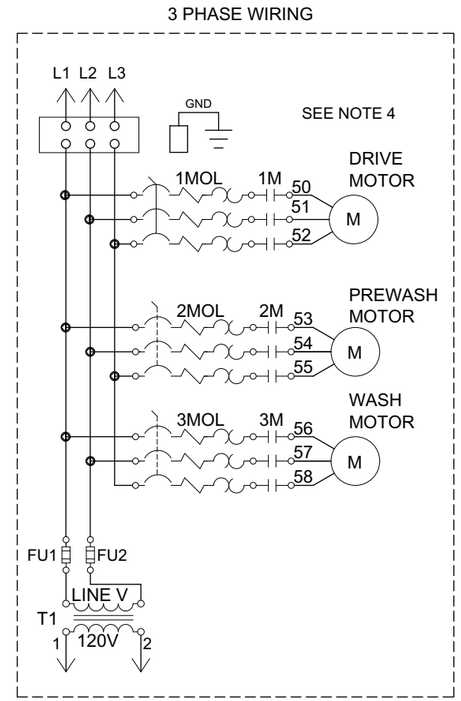


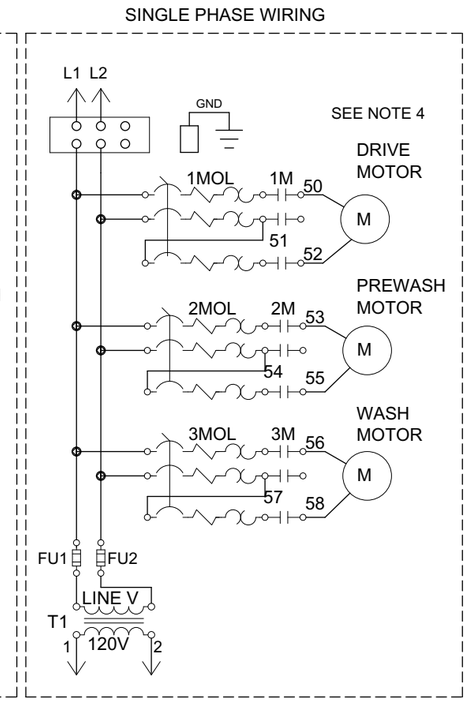


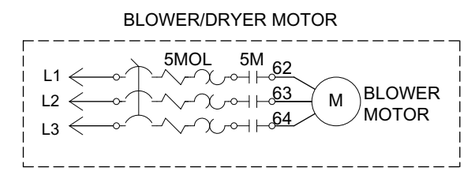


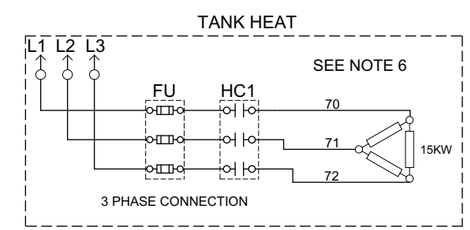


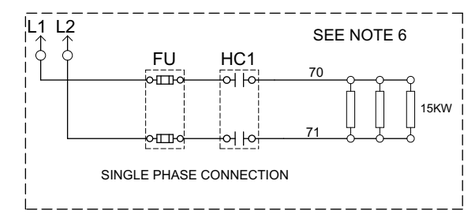


CUSTOMER TO SUPPLY RATED VOLTAGE/PHASE/Hz, AS SPECIFIED PER ORDER,TO DISCONNECT SWITCH. ALL POWER SUPPLIED TO EACH CONNECTION POINT MUST COMPLY WITH ALL LOCAL ELECTRIC CODES.

| | | | |
|---|---|---|---|
| DR.BY | J.MCALLISTER | SCALE | NONE |
| DATE | 17OCT03 | SHEET | 1 OF 1 |

| REV. | DESCRIPTION | DATE | BY |
|---|---|---|---|
| A | REVISED NOTES TO INCLUDE TLS WIRE LOCATION | 14JUN04 | JAM |
| B | ADDED NOTE 5 ADDED WIRING FOR SIDELOADER | 27SEP04 | JAM |
| C | MOVED TABLE LIMIT CIRCUIT | 1DEC04 | JAM |

| REV. | DESCRIPTION | DATE | BY |
|---|---|---|---|
| D | MOVED CWTS AND PREWASH FILL CIRCUIT | 5JAN05 | JAM |
| | | | |
| | | | |

**Champion**
The Dishwashing Machine Specialists

SINGLE TANK RACK CONVEYOR WITH PREWASH, STEAM/ELECTRIC/HOT WATER HEAT

B 701831 REV. D

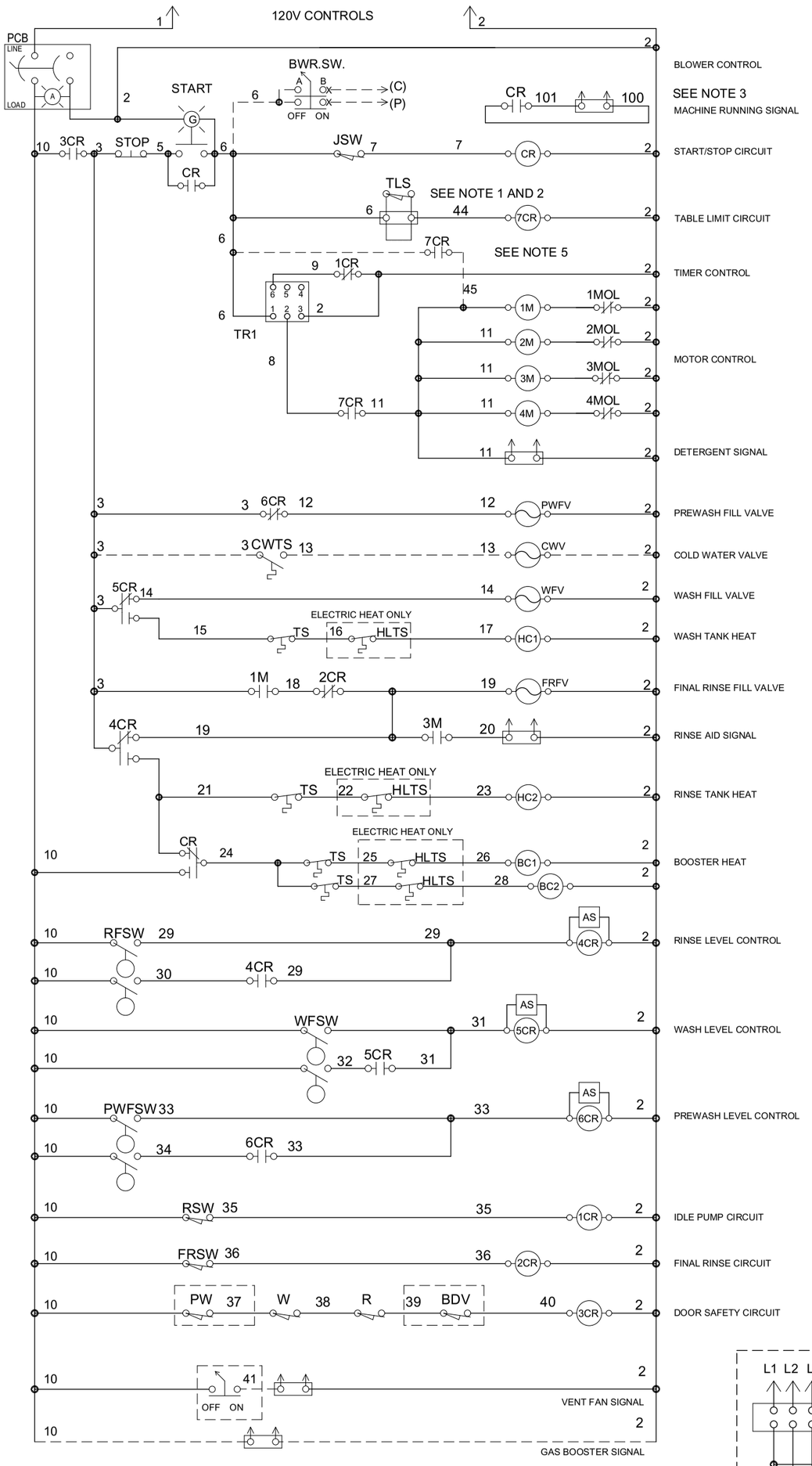


| MODELS COVERED BY THIS DRAWING | |
|---|---|
| 86 PW | 108 HDPW |
| 90 FFPW | 106 PW |
| 100 HDPW | 110 FFPW |
| 94 PW | 120 HDPW |
| 98 FFPW | |

| | |
|---|---|
| 1CR | RACK SWITCH RELAY |
| 2CR | FINAL RINSE SWITCH RELAY |
| 3CR | DOOR SAFETY SWITCH RELAY |
| 4CR | RINSE FILL RELAY |
| 5CR | WASH FILL RELAY |
| 6CR | PREWASH FILL RELAY |
| 7CR | TABLE LIMIT SWITCH RELAY |
| 1M | DRIVE MOTOR CONTACTOR |
| 1MOL | DRIVE MOTOR OVERLOAD |
| 2M | PREWASH MOTOR CONTACTOR |
| 2MOL | PREWASH MOTOR OVERLOAD |
| 3M | WASH MOTOR CONTACTOR |
| 3MOL | WASH MOTOR OVERLOAD |
| 4M | RINSE MOTOR CONTACTOR |
| 4MOL | RINSE MOTOR OVERLOAD |
| 5M | BLOWER MOTOR CONTACTOR |
| 5MOL | BLOWER MOTOR OVERLOAD |
| AS | ARC SUPPRESSOR |
| BC- | BOOSTER CONTACTOR/STEAM VALVE |
| BDV | BLOWER DOOR SWITCH |
| BWR.SW. | BLOWER SWITCH |
| CR | HOLD-IN RELAY |
| CWTS | COLD WATER THERMOSTAT |
| CWV | COLD WATER VALVE |
| FRSW | FINAL RINSE SWITCH |
| FU | FUSE/FUSE BLOCK |
| FRFV | FINAL RINSE FILL VALVE |
| FRSW | FINAL RINSE SWITCH |
| HC- | HEAT CONTACTOR/STEAM VALVE |
| HLTS | HIGH LIMIT THERMOSTAT |
| JSW | JAM SWITCH |
| PCB | POWER SWITCH/CIRCUIT BREAKER |
| PW | PREWASH DOOR SWITCH |
| PWFV | PREWASH FILL VALVE |
| PWFSW | PREWASH FLOAT SWITCH |
| R | RINSE DOOR SWITCH |
| RFSW | RINSE TANK FLOAT SWITCH |
| RSW | RACK SWITCH |
| T1 | CONTROL TRANSFORMER |
| TLS | TABLE LIMIT SWITCH |
| TR1 | IDLE PUMP TIMER |
| TS | THERMOSTAT |
| W | WASH DOOR SWITCH |
| WFSW | WASH TANK FLOAT SWITCH |
| WFV | WASH FILL VALVE |

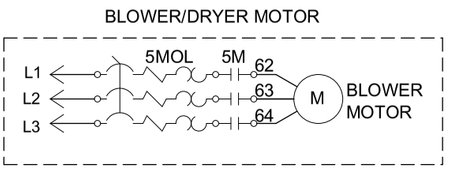


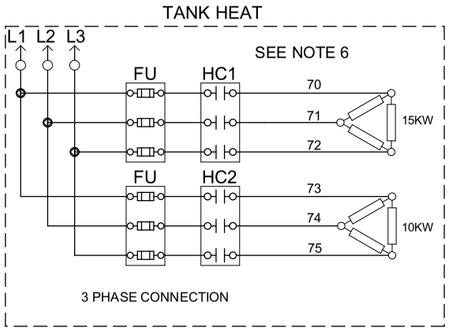


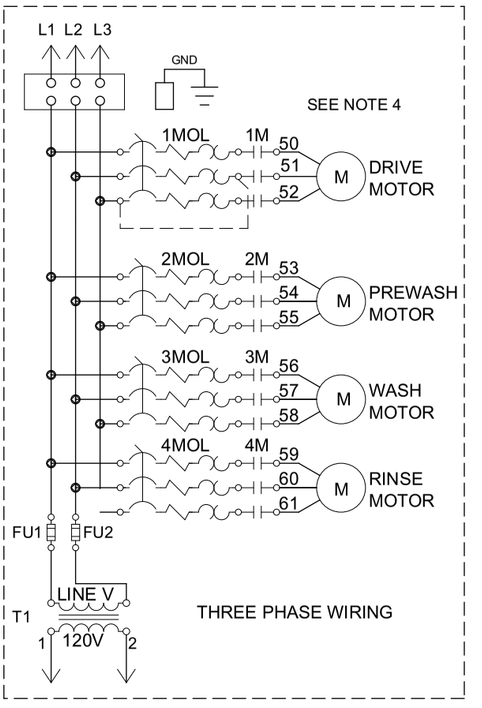


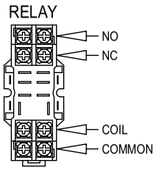


DIAGRAM STATE
POWER OFF
DOORS CLOSED
TANKS EMPTY

NOTES:

1. 7CR IS USED ONLY WITH A TABLE LIMIT SWITCH OR MRA TABLE. WHEN A TABLE LIMIT SWITCH IS NOT USED INSTALL JUMPER.
2. WHEN TABLE LIMIT SWITCH OR MRA IS USED, CONNECT SWITCHES BETWEEN WIRES 6 AND 44 ON TERMINAL BLOCK IN PANEL.
3. USED FOR MACHINE RUNNING SIGNAL.
4. DRIVE MOTOR CONNECTED SINGLE PHASE FOR 200-240 VOLT MODELS.
5. ON MODELS WITH SIDE LOADER OPTION DRIVE MOTOR CONTACTOR 1M IS CONNECTED TO WIRE #45 INSTEAD OF WIRE #11.
6. ON MODELS WITH MULTIPLE ELECTRIC CONNECTIONS, MAKE HEATER POWER CONNECTIONS AT THE HEATER FUSE BLOCK.

CUSTOMER TO SUPPLY RATED VOLTAGE/PHASE/Hz, AS SPECIFIED PER ORDER. TO DISCONNECT SWITCH. ALL POWER SUPPLIED TO EACH CONNECTION POINT MUST COMPLY WITH ALL LOCAL ELECTRIC CODES.

| DATE | DR. BY | SCALE | SHEET |
|---|---|---|---|
| 17OCT03 | J.MCALLISTER | NONE | 1 OF 1 |

| REV. | DESCRIPTION | DATE | BY |
|---|---|---|---|
| A | REVISED NOTES TO INCLUDE TLS WIRE LOCATION | 14JUN04 | JAM |
| B | ADDED NOTE 5 ADDED WIRING FOR SIDELOADER | 27SEP04 | JAM |
| C | MOVED TABLE LIMIT SWITCH CIRCUIT | 02DEC04 | JAM |

| REV. | DESCRIPTION | DATE | BY |
|---|---|---|---|
| | | | |

**Champion**
The Dishwashing Machine Specialists

TWO TANK RACK CONVEYOR WITH PREWASH, STEAM/ELECTRIC HEAT

B 701834 REV. C

| MODELS COVERED BY THIS DRAWING | |
|---|---|
| 44 WS | 70 WS FFPW |
| 66 WS PW | 80 WS HDPW |

NOTES:

1. 7CR IS USED ONLY WITH A TABLE LIMIT SWITCH OR MRA TABLE. WHEN A TABLE LIMIT SWITCH IS NOT USED INSTALL JUMPER.
2. WHEN TABLE LIMIT SWITCH OR MRA IS USED, CONNECT SWITCHES BETWEEN WIRES 6 AND 44 ON TERMINAL BLOCK IN PANEL.
3. USED FOR MACHINE RUNNING SIGNAL.
4. DRIVE MOTOR CONNECTED SINGLE PHASE FOR 200-240 VOLT MODELS.
5. ON MODELS WITH SIDE LOADER OPTION DRIVE MOTOR CONTACTOR 1M IS CONNECTED TO WIRE #45 INSTEAD OF WIRE #11.
6. ON MODELS WITH MULTIPLE ELECTRIC CONNECTIONS, MAKE HEATER POWER CONNECTIONS AT THE HEATER FUSE BLOCK.

| | |
|---|---|
| 1CR | RACK SWITCH RELAY |
| 2CR | FINAL RINSE SWITCH RELAY |
| 3CR | DOOR SAFETY SWITCH RELAY |
| 5CR | WASH FILL RELAY |
| 6CR | PREWASH FILL RELAY |
| 7CR | TABLE LIMIT SWITCH RELAY |
| 1M | DRIVE MOTOR CONTACTOR |
| 1MOL | DRIVE MOTOR OVERLOAD |
| 2M | PREWASH MOTOR CONTACTOR |
| 2MOL | PREWASH MOTOR OVERLOAD |
| 3M | WASH MOTOR CONTACTOR |
| 3MOL | WASH MOTOR OVERLOAD |
| 5M | BLOWER MOTOR CONTACTOR |
| 5MOL | BLOWER MOTOR OVERLOAD |
| AS | ARC SUPPRESSOR |
| BC- | BOOSTER CONTACTOR/STEAM VALVE |
| BDV | BLOWER DOOR SWITCH |
| BR | BOOSTER RELAY |
| BWR.SW. | BLOWER SWITCH |
| CR | HOLD-IN RELAY |
| CWTS | COLD WATER THERMOSTAT |
| CWV | COLD WATER VALVE |
| FRSW | FINAL RINSE SWITCH |
| FU | FUSE/FUSE BLOCK |
| FV | FILL VALVE |
| HC- | HEAT CONTACTOR/STEAM VALVE |
| HLTS | HIGH LIMIT THERMOSTAT |
| JSW | JAM SWITCH |
| PCB | POWER SWITCH/CIRCUIT BREAKER |
| PW | PREWASH DOOR SWITCH |
| PWFSW | PREWASH FLOAT SWITCH |
| PWFV | PREWASH FILL VALVE |
| RSW | RACK SWITCH |
| RV | RINSE VALVE |
| T1 | CONTROL TRANSFORMER |
| TLS | TABLE LIMIT SWITCH |
| TR1 | IDLE PUMP TIMER |
| TS | THERMOSTAT |
| W | WASH DOOR SWITCH |
| WFSW | WASH TANK FLOAT SWITCH |

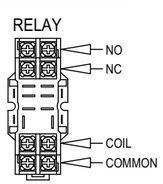


DIAGRAM STATE
POWER OFF
DOORS CLOSED
TANKS EMPTY

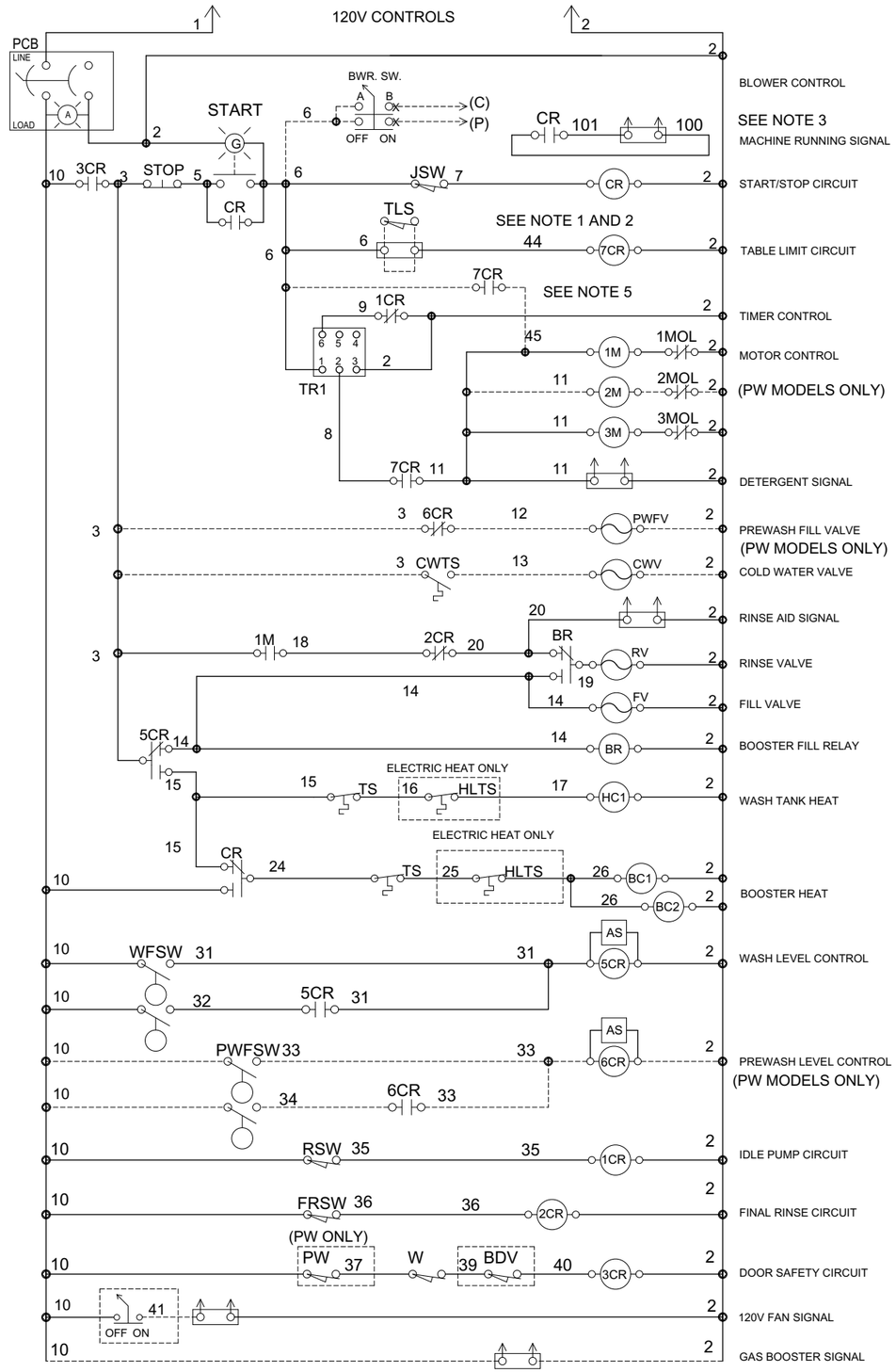


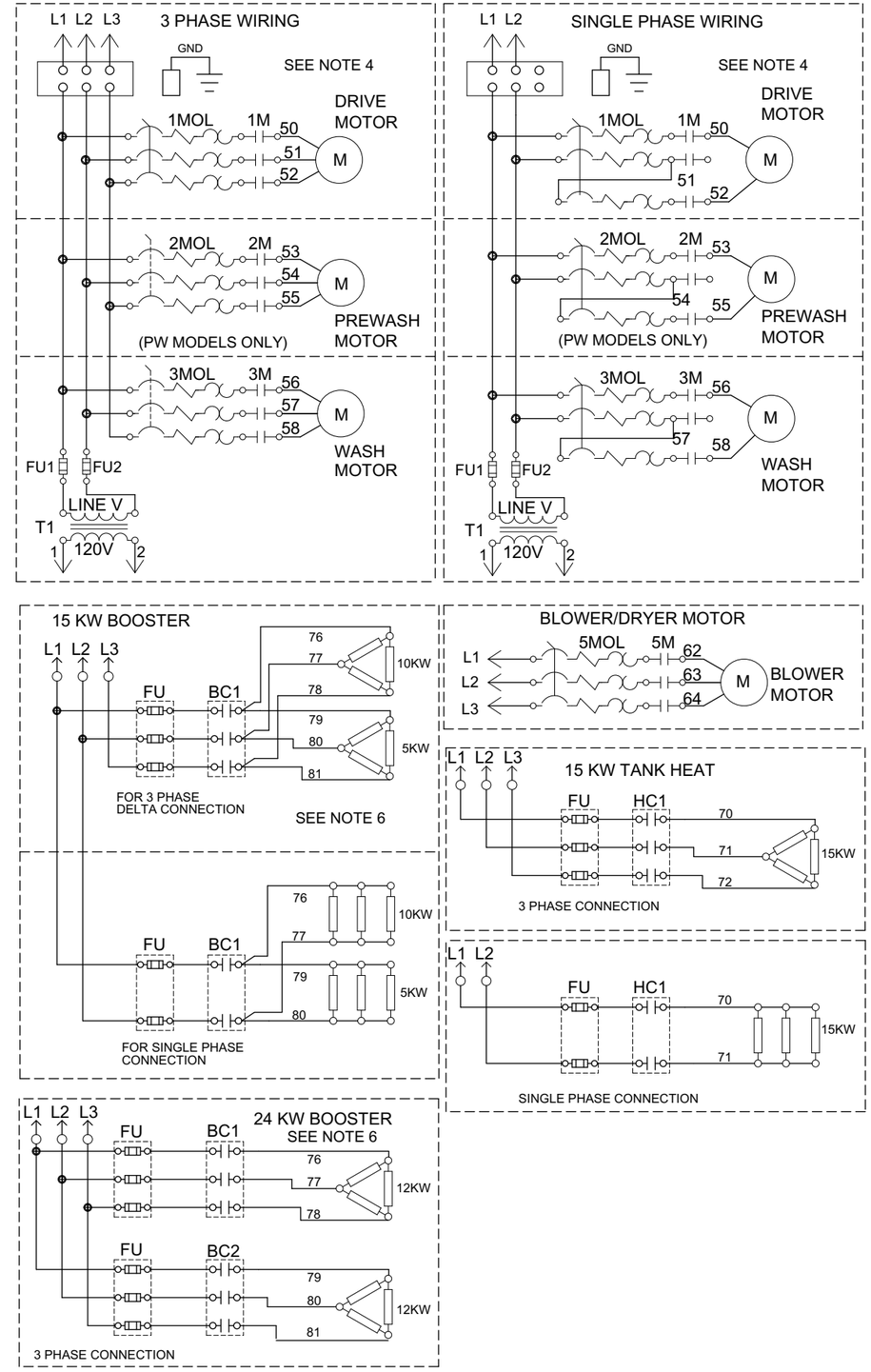


CUSTOMER TO SUPPLY RATED VOLTAGE/PHASE/Hz, AS SPECIFIED PER ORDER,TO DISCONNECT SWITCH. ALL POWER SUPPLIED TO EACH CONNECTION POINT MUST COMPLY WITH ALL LOCAL ELECTRIC CODES.

| DR.BY | J.MCALLISTER | SCALE | NONE |
|---|---|---|---|
| DATE | 10FEB04 | SHEET | 1 OF 1 |

| REV. | DESCRIPTION | DATE | BY |
|---|---|---|---|
| A | REVISED NOTES TO INCLUDE TLS WIRE LOCATION | 14JUN04 | JAM |
| B | ADDED NOTE 5 ADDED WIRING FOR SIDELOADER | 27SEP04 | JAM |
| C | MOVED TABLE LIMIT SWITCH CIRCUIT | 07DEC04 | JAM |

| REV. | DESCRIPTION | DATE | BY |
|---|---|---|---|
| D | MOVED CWTS AND PREWASH FILL VALVE | 10JAN05 | JAM |

**Champion**
The Dishwashing Machine Specialists

RACK CONVEYOR, WATER SAVER
STEAM/ELECTRIC HEAT

B 701843 REV. D

## 3 PHASE CONNECTION

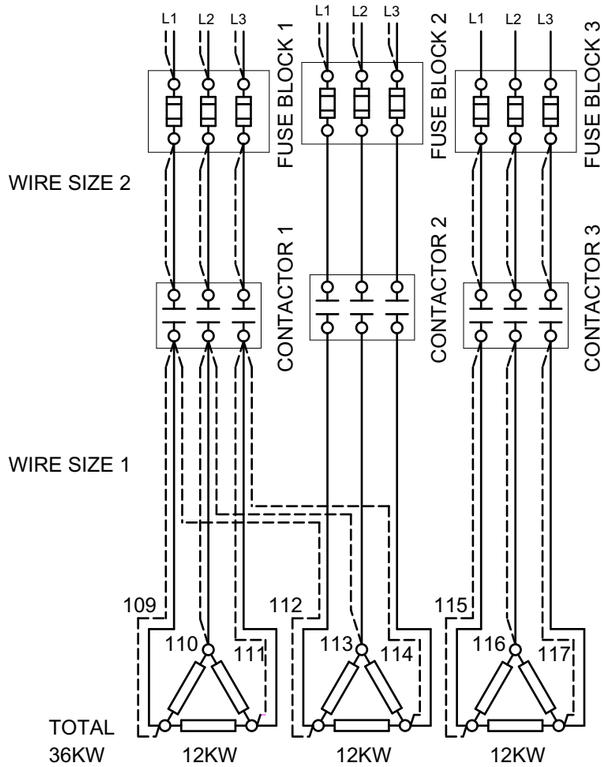


### Y CONNECTION 380/415V ONLY

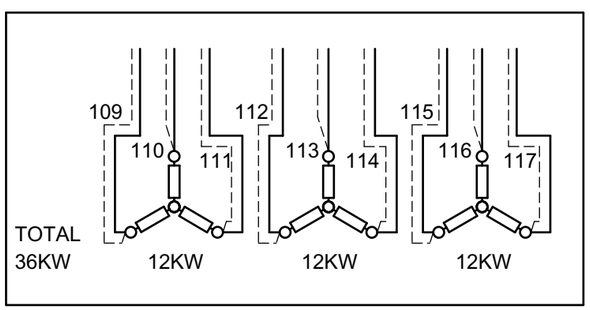


| CANISTER 1 KW/CANISTER 36KW | | | |
|---|---|---|---|
| VOLTAGE 200-220V | | | |
| KW/CONTACTOR | 12KW | 12KW | 12KW |
| CONTACTOR # | 1 | 2 | 3 |
| CONTACTOR RATING | 60A | 60A | 60A |
| FUSE BLOCK # | 1 | 2 | 3 |
| FUSE RATING | 45A | 45A | 45A |
| WIRE SIZE 1 AND 2 | #8 | #8 | #8 |

| CANISTER 1 KW/CANISTER 36KW | | | |
|---|---|---|---|
| VOLTAGE 230-240V | | | |
| KW/CONTACTOR | 12KW | 12KW | 12KW |
| CONTACTOR # | 1 | 2 | 3 |
| CONTACTOR RATING | 60A | 60A | 60A |
| FUSE BLOCK # | 1 | 2 | 3 |
| FUSE RATING | 40A | 40A | 40A |
| WIRE SIZE 1 AND 2 | #8 | #8 | #8 |

| CANISTER 1 KW/CANISTER 36KW | | |
|---|---|---|
| VOLTAGE 380V | | |
| KW/CONTACTOR | 24KW | 12KW |
| CONTACTOR # | 1 | 3 |
| CONTACTOR RATING | 60A | 60A |
| FUSE BLOCK # | 1 | 3 |
| FUSE RATING | 45A | 25A |
| WIRE SIZE 1 | #12 | #12 |
| WIRE SIZE 2 | #10 | #12 |

| CANISTER 1 KW/CANISTER 36KW | | |
|---|---|---|
| VOLTAGE 415V | | |
| KW/CONTACTOR | 24KW | 12KW |
| CONTACTOR # | 1 | 3 |
| CONTACTOR RATING | 60A | 60A |
| FUSE BLOCK # | 1 | 3 |
| FUSE RATING | 45A | 25A |
| WIRE SIZE 1 | #12 | #12 |
| WIRE SIZE 2 | #10 | #12 |

| CANISTER 1 KW/CANISTER 36KW | | |
|---|---|---|
| VOLTAGE 480V | | |
| KW/CONTACTOR | 24KW | 12KW |
| CONTACTOR # | 1 | 3 |
| CONTACTOR RATING | 60A | 60A |
| FUSE BLOCK # | 1 | 2 |
| FUSE RATING | 40A | 20A |
| WIRE SIZE 1 | #14 | #14 |
| WIRE SIZE 2 | #10 | #14 |

| CANISTER 1 KW/CANISTER 36KW | | |
|---|---|---|
| VOLTAGE 575V | | |
| KW/CONTACTOR | 24KW | 12KW |
| CONTACTOR # | 1 | 3 |
| CONTACTOR RATING | 60A | 60A |
| FUSE BLOCK # | 1 | 3 |
| FUSE RATING | 30A | 15A |
| WIRE SIZE 1 | #14 | #14 |
| WIRE SIZE 2 | #10 | #14 |

## 1 PHASE CONNECTION

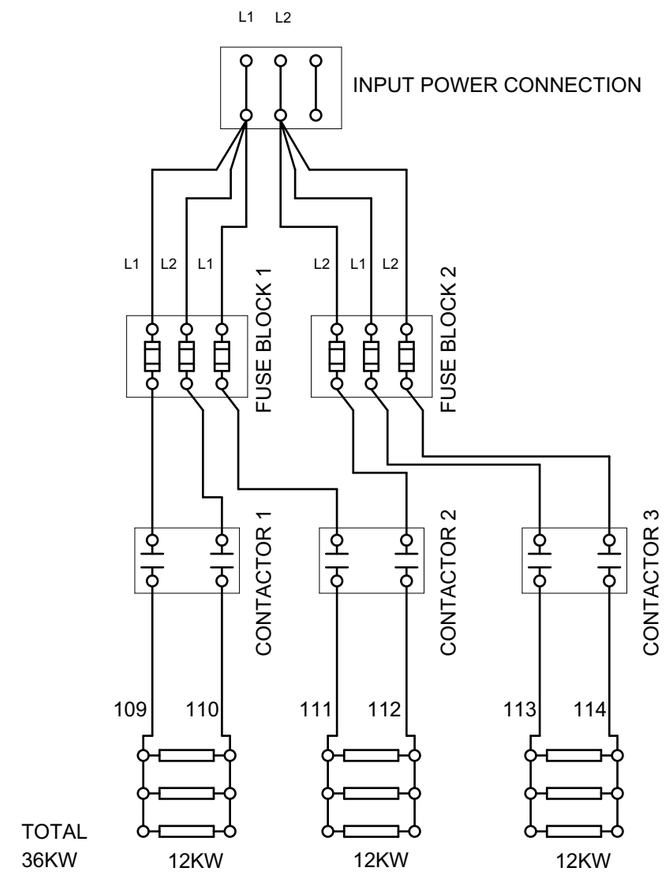


| CANISTER 1 KW/CANISTER 36KW | | | |
|---|---|---|---|
| VOLTAGE 200-220V | | | |
| KW/CONTACTOR | 12KW | 12KW | 12KW |
| CONTACTOR # | 1 | 2 | 3 |
| CONTACTOR RATING | 75A | 75A | 75A |
| FUSE BLOCK # | 1 | 2 | 3 |
| FUSE RATING | 70A | 70A | 70A |
| WIRE SIZE | #4 | #4 | #4 |

| CANISTER 1 KW/CANISTER 36KW | | | |
|---|---|---|---|
| VOLTAGE 230-240V | | | |
| KW/CONTACTOR | 12KW | 12KW | 12KW |
| CONTACTOR # | 1 | 2 | 3 |
| CONTACTOR RATING | 75A | 75A | 75A |
| FUSE BLOCK # | 1 | 2 | 3 |
| FUSE RATING | 70A | 70A | 70A |
| WIRE SIZE | #6 | #6 | #6 |

CUSTOMER TO SUPPLY RATED VOLTAGE/PHASE/Hz, AS SPECIFIED PER ORDER,TO DISCONNECT SWITCH. ALL POWER SUPPLIED TO EACH CONNECTION POINT MUST COMPLY WITH ALL LOCAL ELECTRIC CODES.

| | | | |
|---|---|---|---|
| DR.BY | J.MCALLISTER | SCALE | |
| DATE | 05APR04 | SHEET 1 OF 1 | |

| REV. | DESCRIPTION | DATE | BY |
|---|---|---|---|
| | | | |
| | | | |
| | | | |

| REV. | DESCRIPTION | DATE | BY |
|---|---|---|---|
| | | | |
| | | | |
| | | | |

**Champion**
The Dishwashing Machine Specialists

CH-36E, 36KW BOOSTER
FOR RACK CONVEYOR MACHINES

B 701861 REV.

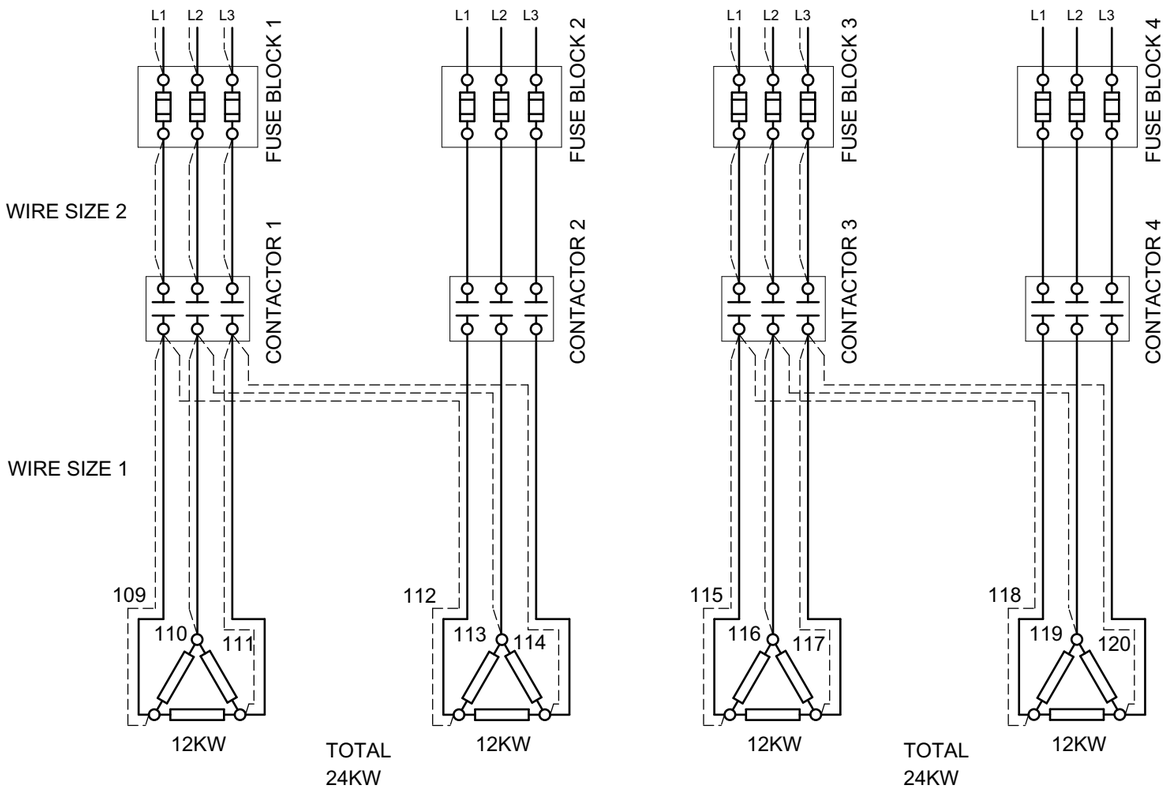


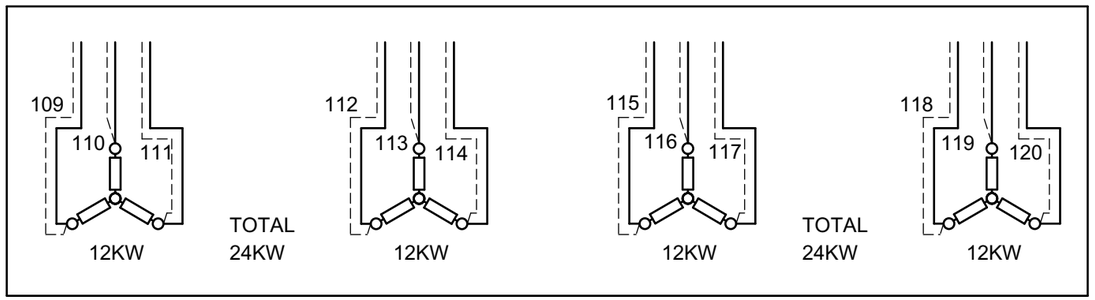


Y CONNECTION 380/415V ONLY

| CANISTER 1 KW/CANISTER 24KW | | | CANISTER 2 KW/CANISTER 24KW | | |
|---|---|---|---|---|---|
| VOLTAGE 200-220V | | | VOLTAGE 200-220V | | |
| KW/CONTACTOR | 12KW | 12KW | KW/CONTACTOR | 12KW | 12KW |
| CONTACTOR # | 1 | 2 | CONTACTOR # | 3 | 4 |
| CONTACTOR RATING | 60A | 60A | CONTACTOR RATING | 60A | 60A |
| FUSE BLOCK # | 1 | 2 | FUSE BLOCK # | 3 | 4 |
| FUSE RATING | 45A | 45A | FUSE RATING | 45A | 45A |
| WIRE SIZE 1 AND 2 | #8 | #8 | WIRE SIZE 1 AND 2 | #8 | #8 |

| CANISTER 1 KW/CANISTER 24KW | | | CANISTER 2 KW/CANISTER 24KW | | |
|---|---|---|---|---|---|
| VOLTAGE 230-240V | | | VOLTAGE 230-240V | | |
| KW/CONTACTOR | 12KW | 12KW | KW/CONTACTOR | 12KW | 12KW |
| CONTACTOR # | 1 | 2 | CONTACTOR # | 3 | 4 |
| CONTACTOR RATING | 60A | 60A | CONTACTOR RATING | 60A | 60A |
| FUSE BLOCK # | 1 | 2 | FUSE BLOCK # | 3 | 4 |
| FUSE RATING | 40A | 40A | FUSE RATING | 40A | 40A |
| WIRE SIZE 1 AND 2 | #8 | #8 | WIRE SIZE 1 AND 2 | #8 | #8 |

| CANISTER 1 KW/CANISTER 24KW | | CANISTER 2 KW/CANISTER 24KW | |
|---|---|---|---|
| VOLTAGE 380V | | VOLTAGE 380V | |
| KW/CONTACTOR | 24KW | KW/CONTACTOR | 24KW |
| CONTACTOR # | 1 | CONTACTOR # | 3 |
| CONTACTOR RATING | 60A | CONTACTOR RATING | 60A |
| FUSE BLOCK # | 1 | FUSE BLOCK # | 3 |
| FUSE RATING | 45A | FUSE RATING | 45A |
| WIRE SIZE 1 | #12 | WIRE SIZE 1 | #12 |
| WIRE SIZE 2 | #10 | WIRE SIZE 2 | #10 |

| CANISTER 1 KW/CANISTER 24KW | | CANISTER 2 KW/CANISTER 24KW | |
|---|---|---|---|
| VOLTAGE 415V | | VOLTAGE 415V | |
| KW/CONTACTOR | 24KW | KW/CONTACTOR | 27KW |
| CONTACTOR # | 1 | CONTACTOR # | 3 |
| CONTACTOR RATING | 60A | CONTACTOR RATING | 60A |
| FUSE BLOCK # | 1 | FUSE BLOCK # | 3 |
| FUSE RATING | 45A | FUSE RATING | 45A |
| WIRE SIZE 1 | #12 | WIRE SIZE 1 | #12 |
| WIRE SIZE 2 | #10 | WIRE SIZE 2 | #10 |

| CANISTER 1 KW/CANISTER 24KW | | CANISTER 2 KW/CANISTER 24KW | |
|---|---|---|---|
| VOLTAGE 480V | | VOLTAGE 480V | |
| KW/CONTACTOR | 24KW | KW/CONTACTOR | 24KW |
| CONTACTOR # | 1 | CONTACTOR # | 3 |
| CONTACTOR RATING | 60A | CONTACTOR RATING | 60A |
| FUSE BLOCK # | 1 | FUSE BLOCK # | 3 |
| FUSE RATING | 40A | FUSE RATING | 40A |
| WIRE SIZE 1 | #14 | WIRE SIZE 1 | #14 |
| WIRE SIZE 2 | #10 | WIRE SIZE 2 | #10 |

| CANISTER 1 KW/CANISTER 24KW | | CANISTER 2 KW/CANISTER 24KW | |
|---|---|---|---|
| VOLTAGE 575V | | VOLTAGE 575V | |
| KW/CONTACTOR | 24KW | KW/CONTACTOR | 24KW |
| CONTACTOR # | 1 | CONTACTOR # | 3 |
| CONTACTOR RATING | 60A | CONTACTOR RATING | 60A |
| FUSE BLOCK # | 1 | FUSE BLOCK # | 3 |
| FUSE RATING | 30A | FUSE RATING | 30A |
| WIRE SIZE 1 | #14 | WIRE SIZE 1 | #14 |
| WIRE SIZE 2 | #10 | WIRE SIZE 2 | #10 |

CUSTOMER TO SUPPLY RATED VOLTAGE/PHASE/Hz, AS SPECIFIED PER ORDER,TO DISCONNECT SWITCH. ALL POWER SUPPLIED TO EACH CONNECTION POINT MUST COMPLY WITH ALL LOCAL ELECTRIC CODES.

| DR.BY | J.MCALLISTER | SCALE | |
|---|---|---|---|
| DATE | 05APR04 | SHEET 1 OF 1 | |

| REV. | DESCRIPTION | DATE | BY |
|---|---|---|---|
| | | | |
| | | | |
| | | | |

| REV. | DESCRIPTION | DATE | BY |
|---|---|---|---|
| | | | |
| | | | |
| | | | |

**Champion**
The Dishwashing Machine Specialists

CH-48E, 48KW BOOSTER
FOR RACK CONVEYOR MACHINES

B 701862 REV.

## 3 PHASE CONNECTION

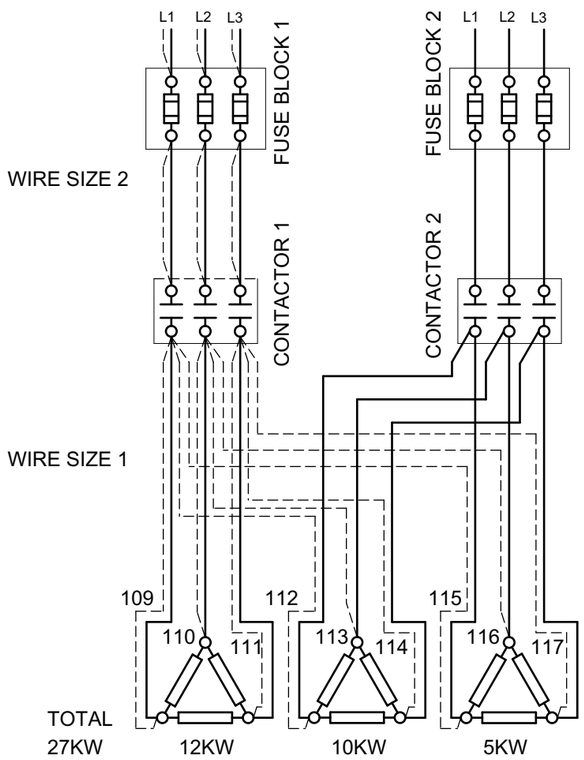


### Y CONNECTION 380/415V ONLY

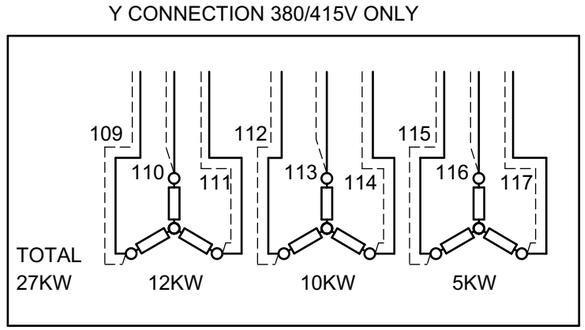


CANISTER 1 KW/CANISTER 27KW
VOLTAGE 200-220V

| | | |
|---|---|---|
| KW/CONTACTOR | 12KW | 15KW |
| CONTACTOR # | 1 | 2 |
| CONTACTOR RATING | 60A | 60A |
| FUSE BLOCK # | 1 | 2 |
| FUSE RATING | 45A | 60A |
| WIRE SIZE 1 AND 2 | #8 | #8 |

CANISTER 1 KW/CANISTER 27KW
VOLTAGE 230-240V

| | | |
|---|---|---|
| KW/CONTACTOR | 12KW | 15KW |
| CONTACTOR # | 1 | 2 |
| CONTACTOR RATING | 60A | 60A |
| FUSE BLOCK # | 1 | 2 |
| FUSE RATING | 40A | 50A |
| WIRE SIZE 1 AND 2 | #8 | #8 |

CANISTER 1 KW/CANISTER 27KW
VOLTAGE 380V

| | |
|---|---|
| KW/CONTACTOR | 27KW |
| CONTACTOR # | 1 |
| CONTACTOR RATING | 60A |
| FUSE BLOCK # | 1 |
| FUSE RATING | 50A |
| WIRE SIZE 1 | #10 |
| WIRE SIZE 2 | #10 |

CANISTER 1 KW/CANISTER 27KW
VOLTAGE 415V

| | |
|---|---|
| KW/CONTACTOR | 27KW |
| CONTACTOR # | 1 |
| CONTACTOR RATING | 60A |
| FUSE BLOCK # | 1 |
| FUSE RATING | 50A |
| WIRE SIZE 1 | #10 |
| WIRE SIZE 2 | #10 |

CANISTER 1 KW/CANISTER 27KW
VOLTAGE 480V

| | |
|---|---|
| KW/CONTACTOR | 27KW |
| CONTACTOR # | 1 |
| CONTACTOR RATING | 60A |
| FUSE BLOCK # | 1 |
| FUSE RATING | 40A |
| WIRE SIZE 1 | #10 |
| WIRE SIZE 2 | #10 |

CANISTER 1 KW/CANISTER 27KW
VOLTAGE 575V

| | |
|---|---|
| KW/CONTACTOR | 27KW |
| CONTACTOR # | 1 |
| CONTACTOR RATING | 60A |
| FUSE BLOCK # | 1 |
| FUSE RATING | 35A |
| WIRE SIZE 1 | #10 |
| WIRE SIZE 2 | #10 |

## 1 PHASE CONNECTION

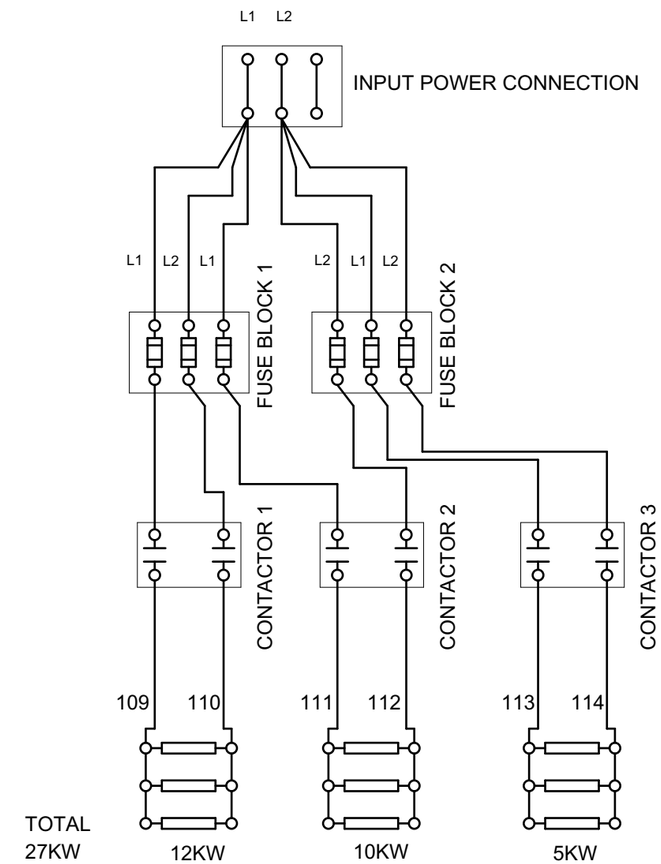


CANISTER 1 KW/CANISTER 27KW
VOLTAGE 200-220V

| | | | |
|---|---|---|---|
| KW/CONTACTOR | 12KW | 10KW | 5KW |
| CONTACTOR # | 1 | 2 | 3 |
| CONTACTOR RATING | 75A | 60A | 60A |
| FUSE BLOCK # | 1 | 2 | 3 |
| FUSE RATING | 70A | 60A | 30A |
| WIRE SIZE | #6 | #6 | #10 |

CANISTER 1 KW/CANISTER 27KW
VOLTAGE 230-240V

| | | | |
|---|---|---|---|
| KW/CONTACTOR | 12KW | 10KW | 5KW |
| CONTACTOR # | 1 | 2 | 3 |
| CONTACTOR RATING | 60A | 60A | 60A |
| FUSE BLOCK # | 1 | 2 | 3 |
| FUSE RATING | 60A | 60A | 30A |
| WIRE SIZE | #6 | #6 | #10 |

CUSTOMER TO SUPPLY RATED VOLTAGE/PHASE/Hz, AS SPECIFIED PER ORDER,TO DISCONNECT SWITCH. ALL POWER SUPPLIED TO EACH CONNECTION POINT MUST COMPLY WITH ALL LOCAL ELECTRIC CODES.

| | | | |
|---|---|---|---|
| DR.BY | J.MCALLISTER | SCALE | NONE |
| DATE | 03MAY04 | SHEET 1 OF 1 | |

| REV. | DESCRIPTION | DATE | BY |
|---|---|---|---|
| | | | |
| | | | |
| | | | |

| REV. | DESCRIPTION | DATE | BY |
|---|---|---|---|
| | | | |
| | | | |
| | | | |

**Champion**
The Dishwashing Machine Specialists

CH-27E, 27KW BOOSTER
FOR RACK CONVEYOR MACHINES

B 701888 REV.

| MODELS COVERED BY THIS DRAWING | |
|---|---|
| 44DR | |
| | |
| | |

**NOTES:**

1. 7CR IS USED ONLY WITH A TABLE LIMIT SWITCH OR MRA TABLE. WHEN A TABLE LIMIT SWITCH IS NOT USED INSTALL JUMPER.
2. WHEN TABLE LIMIT SWITCH OR MRA IS USED, CONNECT SWITCHES BETWEEN WIRES 6 AND 44 ON THE TERMINAL BLOCK IN THE PANEL.
3. USED FOR MACHINE RUNNING SIGNAL.
4. DRIVE MOTOR CONNECTED SINGLE PHASE FOR 200-240 VOLT MODELS.
5. ON MODELS WITH SIDE LOADER OPTION DRIVE MOTOR CONTACTOR 1M IS CONNECTED TO WIRE #45 INSTEAD OF WIRE #11.
6. ON MODELS WITH MULTIPLE ELECTRIC CONNECTIONS, MAKE HEATER POWER CONNECTIONS AT THE HEATER FUSE BLOCK.

| | |
|---|---|
| 1CR | RACK SWITCH RELAY |
| 2CR | FINAL RINSE SWITCH RELAY |
| 3CR | DOOR SAFETY SWITCH RELAY |
| 5CR | WASH FILL RELAY |
| 7CR | TABLE LIMIT SWITCH RELAY |
| 11CR | DOUBLE RINSE FILL RELAY |
| 12CR | DRAIN CONTROL RELAY |
| 1M | DRIVE MOTOR CONTACTOR |
| 1MOL | DRIVE MOTOR OVERLOAD |
| 3M | WASH MOTOR CONTACTOR |
| 3MOL | WASH MOTOR OVERLOAD |
| 5M | BLOWER MOTOR CONTACTOR |
| 5MOL | BLOWER MOTOR OVERLOAD |
| 6M | DOUBLE RINSE MOTOR RELAY |
| AS | ARC SUPPRESSOR |
| BC- | BOOSTER CONTACTOR/STEAM VALVE |
| BDV | BLOWER DOOR SWITCH |
| BR | BOOSTER RELAY |
| CR | HOLD-IN RELAY |
| DC1 | DOUBLE RINSE HEATER CONTACTOR |
| DV | DRAIN VALVE |
| DRFSW | DOUBLE RINSE TANK FLOAT SWITCH |
| FRSW | FINAL RINSE SWITCH |
| FU | FUSE/FUSE BLOCK |
| FV | FILL VALVE |
| HC- | HEAT CONTACTOR/STEAM VALVE |
| HLTS | HIGH LIMIT THERMOSTAT |
| JSW | JAM SWITCH |
| PCB | POWER SWITCH/CIRCUIT BREAKER |
| RSW | RACK SWITCH |
| RV | RINSE VALVE |
| T1 | CONTROL TRANSFORMER |
| T2 | DR MOTOR TRANSFORMER |
| TLS | TABLE LIMIT SWITCH |
| TR1 | IDLE PUMP TIMER |
| TR2 | DRAIN VALVE TIMER |
| TS | THERMOSTAT |
| W | WASH DOOR SWITCH |
| WFSW | WASH TANK FLOAT SWITCH |

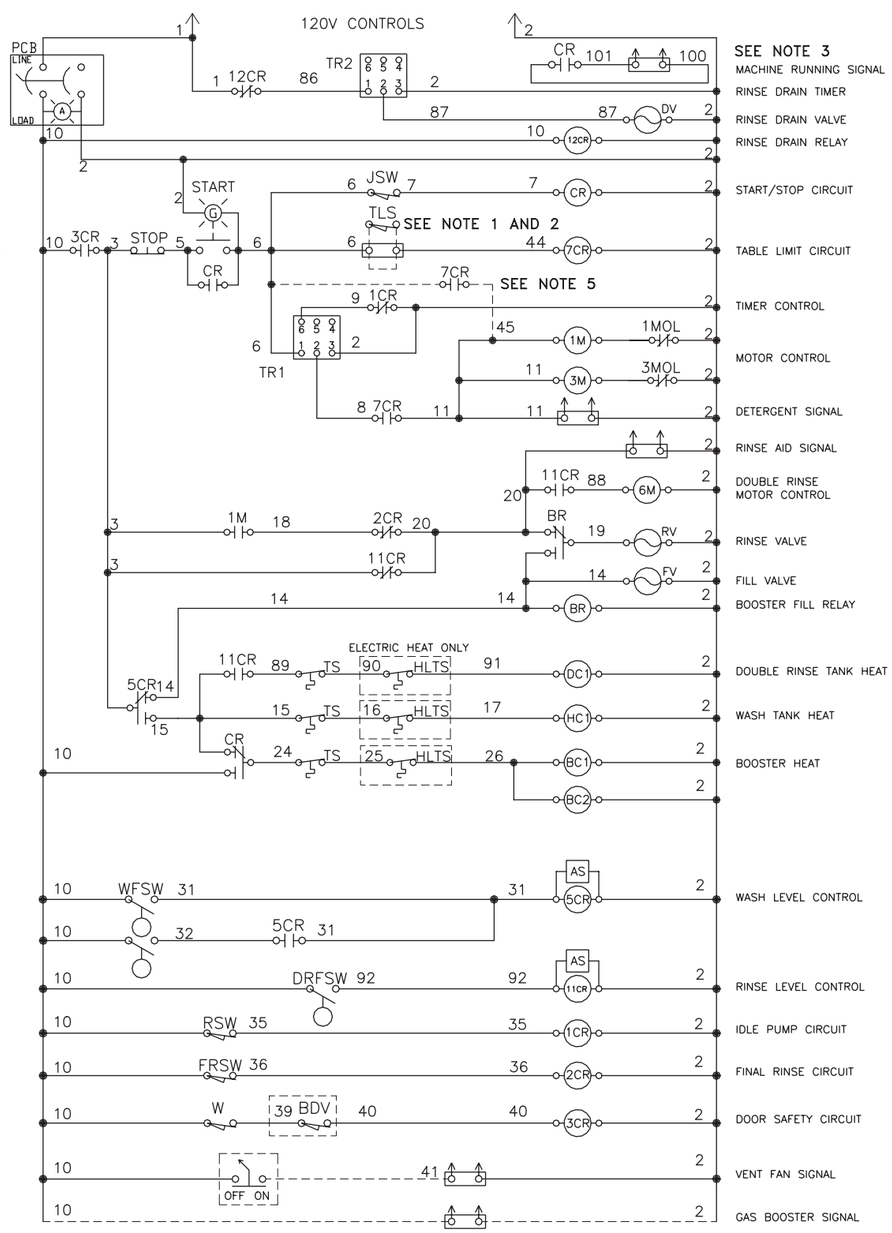


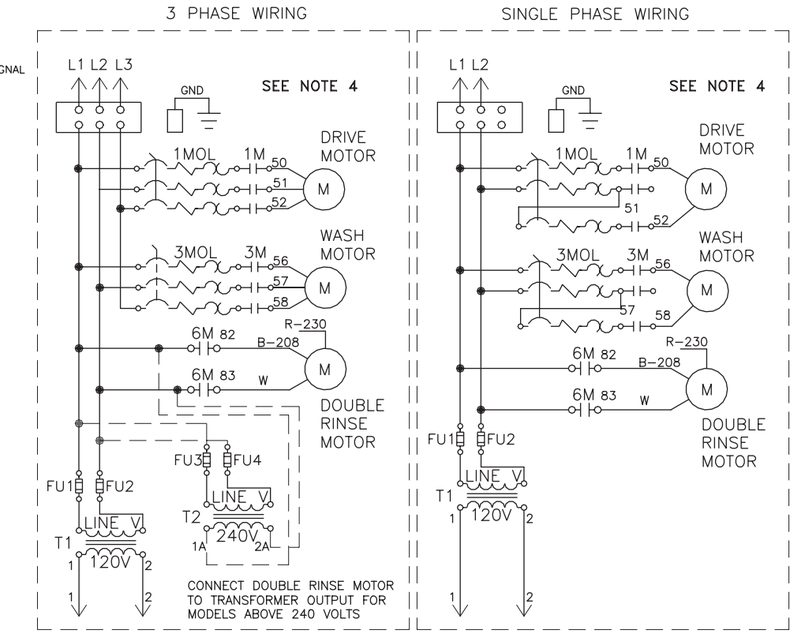


SEE DRAWING 114039 FOR BOOSTER HEATER WIRING

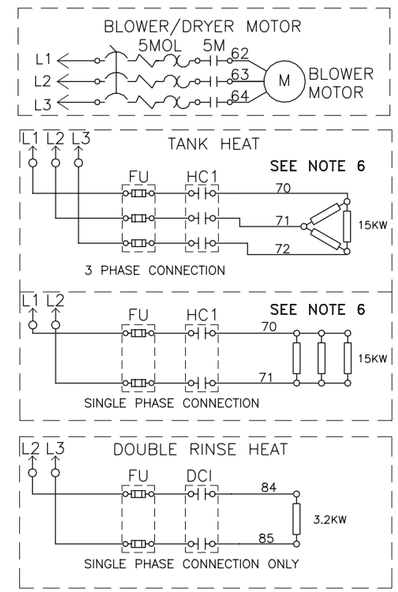


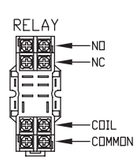


| DIAGRAM STATE |
|---|
| POWER OFF |
| DOORS CLOSED |
| TANKS EMPTY |

CUSTOMER TO SUPPLY RATED VOLTAGE/PHASE/Hz, AS SPECIFIED PER ORDER.TO DISCONNECT SWITCH. ALL POWER SUPPLIED TO EACH CONNECTION POINT MUST COMPLY WITH ALL LOCAL ELECTRIC CODES.

| DR.BY | J.MCALLISTER | SCALE | NONE |
|---|---|---|---|
| DATE | 07SEP04 | SHEET 1 | OF 1 |

| REV. | DESCRIPTION | DATE | BY |
|---|---|---|---|
| | | | |
| | | | |
| | | | |

| REV. | DESCRIPTION | DATE | BY |
|---|---|---|---|
| | | | |
| | | | |
| | | | |

**Champion**
The Dishwashing Machine Specialists

SINGLE TANK RACK CONVEYOR
DOUBLE RINSE STEAM/ELECTRIC HEAT

B 701912 REV.

| MODELS COVERED BY THIS DRAWING | |
|---|---|
| 66DRPW | 70DRFFPW |
| 80DRHDPW | |

**NOTES:**

1. 7CR IS USED ONLY WITH A TABLE LIMIT SWITCH OR MRA TABLE. WHEN A TABLE LIMIT SWITCH IS NOT USED INSTALL JUMPER.
2. WHEN TABLE LIMIT SWITCH OR MRA IS USED, CONNECT SWITCHES BETWEEN WIRES 6 AND 44 ON THE TERMINAL BLOCK IN THE PANEL.
3. USED FOR MACHINE RUNNING SIGNAL.
4. DRIVE MOTOR CONNECTED SINGLE PHASE FOR 200-240 VOLT MODELS.
5. ON MODELS WITH SIDE LOADER OPTION DRIVE MOTOR CONTACTOR 1M IS CONNECTED TO WIRE #45 INSTEAD OF WIRE #11.
6. ON MODELS WITH MULTIPLE ELECTRIC CONNECTIONS, MAKE HEATER POWER CONNECTIONS AT THE HEATER FUSE BLOCK.

| | |
|---|---|
| 1CR | RACK SWITCH RELAY |
| 2CR | FINAL RINSE SWITCH RELAY |
| 3CR | DOOR SAFETY SWITCH RELAY |
| 5CR | WASH FILL RELAY |
| 6CR | PREWASH FILL RELAY |
| 7CR | TABLE LIMIT SWITCH RELAY |
| 11CR | DOUBLE RINSE FILL RELAY |
| 12CR | DRAIN CONTROL RELAY |
| 1M | DRIVE MOTOR CONTACTOR |
| 1MOL | DRIVE MOTOR OVERLOAD |
| 2M | PREWASH MOTOR CONTACTOR |
| 2MOL | PREWASH MOTOR OVERLOAD |
| 3M | WASH MOTOR CONTACTOR |
| 3MOL | WASH MOTOR OVERLOAD |
| 5M | BLOWER MOTOR CONTACTOR |
| 5MOL | BLOWER MOTOR OVERLOAD |
| 6M | DOUBLE RINSE MOTOR RELAY |
| AS | ARC SUPPRESSOR |
| BC- | BOOSTER CONTACTOR/STEAM VALVE |
| BDV | BLOWER DOOR SWITCH |
| BR | BOOSTER RELAY |
| CR | HOLD-IN RELAY |
| CWV | COLD WATER VALVE |
| DC1 | DOUBLE RINSE HEATER CONTACTOR |
| DV | DRAIN VALVE |
| DRFSW | DOUBLE RINSE TANK FLOAT SWITCH |
| FRSW | FINAL RINSE SWITCH |
| FU | FUSE/FUSE BLOCK |
| FV | FILL VALVE |
| HC- | HEAT CONTACTOR/STEAM VALVE |
| HLTS | HIGH LIMIT THERMOSTAT |
| JSW | JAM SWITCH |
| PCB | POWER SWITCH/CIRCUIT BREAKER |
| PWFSW | PREWASH TANK FLOAT SWITCH |
| PWFV | PREWASH FILL VALVE |
| RSW | RACK SWITCH |
| RV | RINSE VALVE |
| T1 | CONTROL TRANSFORMER |
| T2 | DR MOTOR TRANSFORMER |
| TLS | TABLE LIMIT SWITCH |
| TR1 | IDLE PUMP TIMER |
| TR2 | DRAIN VALVE TIMER |
| TS | THERMOSTAT |
| W | WASH DOOR SWITCH |
| WFSW | WASH TANK FLOAT SWITCH |

DIAGRAM STATE
POWER OFF
DOORS CLOSED
TANKS EMPTY

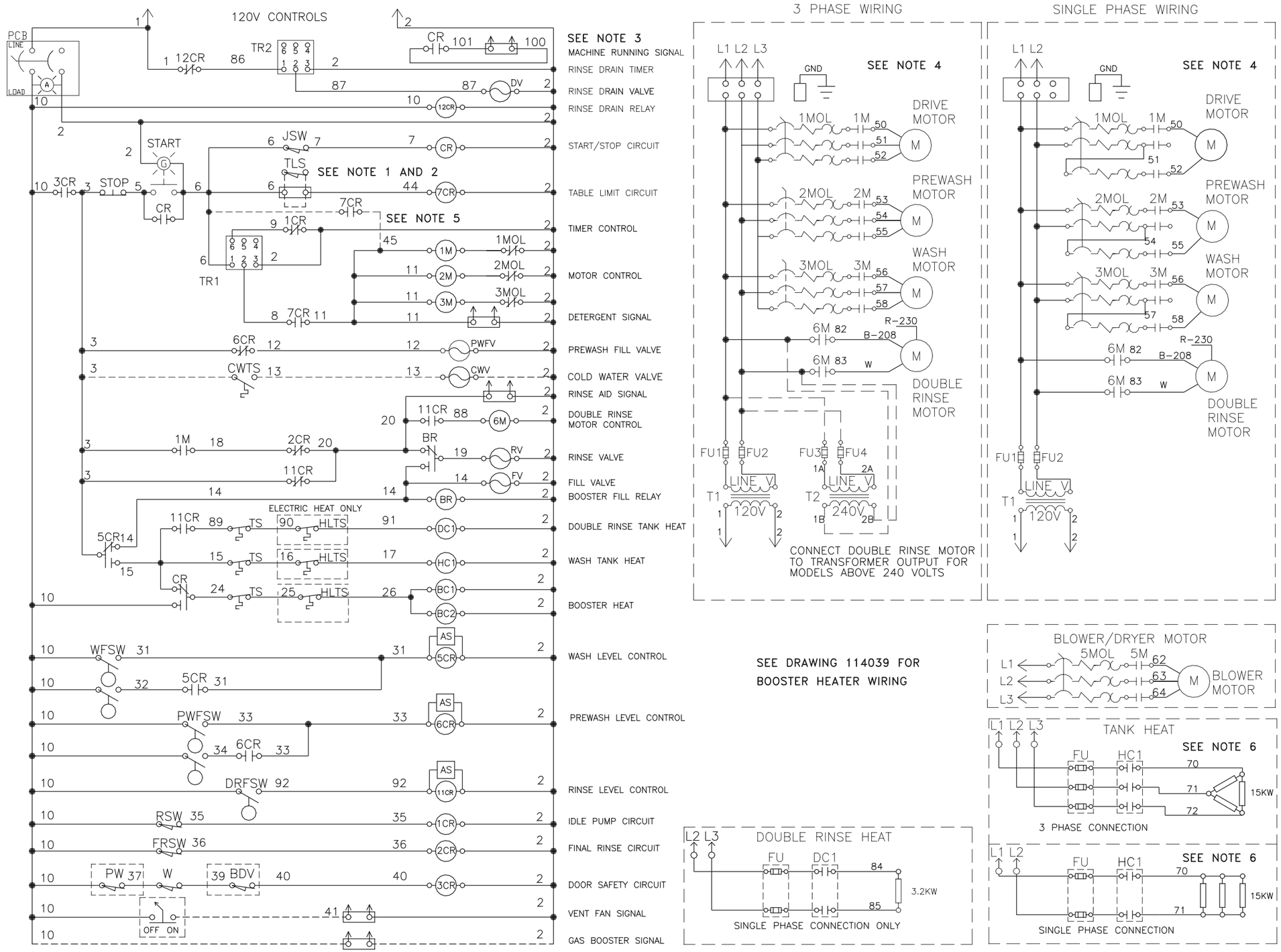


CUSTOMER TO SUPPLY RATED VOLTAGE/PHASE/Hz, AS SPECIFIED PER ORDER,TO DISCONNECT SWITCH. ALL POWER SUPPLIED TO EACH CONNECTION POINT MUST COMPLY WITH ALL LOCAL ELECTRIC CODES.

| | | | |
|---|---|---|---|
| DR.BY | J.MCALLISTER | SCALE | NONE |
| DATE | 23DEC04 | SHEET | 1 OF 1 |

| REV. | DESCRIPTION | DATE | BY |
|---|---|---|---|
| | | | |

| REV. | DESCRIPTION | DATE | BY |
|---|---|---|---|
| | | | |

**Champion**
The Dishwashing Machine Specialists

SINGLE TANK RACK CONVEYOR WITH PREWASH
DOUBLE RINSE STEAM/ELECTRIC HEAT

B 701913 REV.

| MODELS COVERED BY THIS DRAWING | |
|---|---|
| 86 PW | 108 HDPW |
| 90 FFPW | 106 PW |
| 100 HDPW | 110 FFPW |
| 94 PW | 120 HDPW |
| 98 FFPW | |

| | |
|---|---|
| 1CR | RACK SWITCH RELAY |
| 2CR | FINAL RINSE SWITCH RELAY |
| 3CR | DOOR SAFETY SWITCH RELAY |
| 4CR | RINSE FILL RELAY |
| 5CR | WASH FILL RELAY |
| 6CR | PREWASH FILL RELAY |
| 7CR | TABLE LIMIT SWITCH RELAY |
| 9CR | WASH HEAT RELAY |
| 10CR | RINSE HEAT RELAY |
| 1M | DRIVE MOTOR CONTACTOR |
| 1MOL | DRIVE MOTOR OVERLOAD |
| 2M | PREWASH MOTOR CONTACTOR |
| 2MOL | PREWASH MOTOR OVERLOAD |
| 3M | WASH MOTOR CONTACTOR |
| 3MOL | WASH MOTOR OVERLOAD |
| 4M | RINSE MOTOR CONTACTOR |
| 4MOL | RINSE MOTOR OVERLOAD |
| 5M | BLOWER MOTOR CONTACTOR |
| 5MOL | BLOWER MOTOR OVERLOAD |
| AS | ARC SUPPRESSOR |
| BDV | BLOWER DOOR SWITCH |
| BWR.SW. | BLOWER SWITCH |
| CR | HOLD-IN RELAY |
| CWTS | COLD WATER THERMOSTAT |
| CWV | COLD WATER VALVE |
| FRSW | FINAL RINSE SWITCH |
| FU | FUSE/FUSE BLOCK |
| FRFV | FINAL RINSE FILL VALVE |
| FRSW | FINAL RINSE SWITCH |
| HC- | HOT WATER VALVE |
| HCP | HEAT CIRCULATING PUMP |
| JSW | JAM SWITCH |
| PCB | POWER SWITCH/CIRCUIT BREAKER |
| PW | PREWASH DOOR SWITCH |
| PWFV | PREWASH FILL VALVE |
| PWFSW | PREWASH FLOAT SWITCH |
| R | RINSE DOOR SWITCH |
| RFSW | RINSE TANK FLOAT SWITCH |
| RSW | RACK SWITCH |
| T1 | CONTROL TRANSFORMER |
| TLS | TABLE LIMIT SWITCH |
| TR1 | IDLE PUMP TIMER |
| TS | THERMOSTAT |
| W | WASH DOOR SWITCH |
| WFSW | WASH TANK FLOAT SWITCH |
| WFV | WASH FILL VALVE |

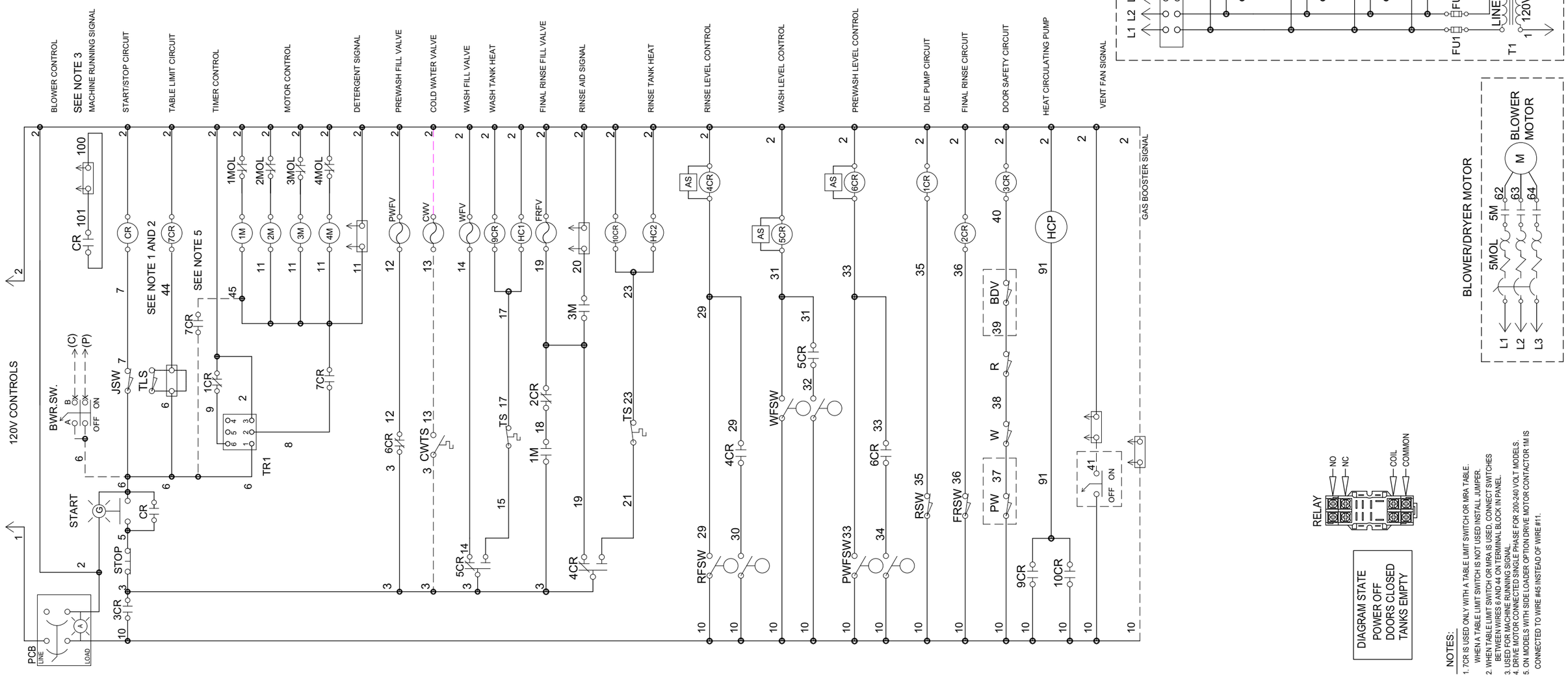


NOTES:

1. 7CR IS USED ONLY WITH A TABLE LIMIT SWITCH OR MRA TABLE. WHEN A TABLE LIMIT SWITCH IS NOT USED INSTALL JUMPER.
2. WHEN TABLE LIMIT SWITCH OR MRA IS USED, CONNECT SWITCHES BETWEEN WIRES 6 AND 44 ON TERMINAL BLOCK IN PANEL.
3. USED FOR MACHINE RUNNING SIGNAL.
4. DRIVE MOTOR CONNECTED SINGLE PHASE FOR 200-240 VOLT MODELS.
5. ON MODELS WITH SIDE LOADER OPTION DRIVE MOTOR CONTACTOR 1M IS CONNECTED TO WIRE #45 INSTEAD OF WIRE #11.

CUSTOMER TO SUPPLY RATED VOLTAGE/PHASE/Hz, AS SPECIFIED PER ORDER,TO DISCONNECT SWITCH. ALL POWER SUPPLIED TO EACH CONNECTION POINT MUST COMPLY WITH ALL LOCAL ELECTRIC CODES.

| | | | |
|---|---|---|---|
| DR.BY | J.MCALLISTER | SCALE | NONE |
| DATE | 15SEP04 | SHEET 1 | OF 1 |

| REV. | DESCRIPTION | DATE | BY |
|---|---|---|---|
| A | MOVED TABLE LIMIT SWITCH CIRCUIT | 02DEC04 | JAM |

| REV. | DESCRIPTION | DATE | BY |
|---|---|---|---|
| | | | |

**Champion**
The Dishwashing Machine Specialists

TWO TANK RACK CONVEYOR WITH PREWASH, HOT WATER HEAT

B 701918 REV. A

CUSTOMER TO SUPPLY RATED VOLTAGE/PHASE/HZ. AS SPECIFIED PER ORDER TO DISCONNECT SWITCH. ALL POWER SUPPLIED TO EACH CONNECTION POINT MUST COMPLY WITH ALL LOCAL ELECTRIC CODES.

| DATE | DR.BY | SCALE | SHEET |
|---|---|---|---|
| 05JAN05 | J.MCALLISTER | NONE | 1 OF 1 |

| REV. | DESCRIPTION | DATE | BY |
|---|---|---|---|
| | | | |

| REV. | DESCRIPTION | DATE | BY |
|---|---|---|---|
| | | | |

**Champion**
The Dishwashing Machine Specialists

B 701937 REV.

SINGLE TANK RACK CONVEYOR, DOUBLE RINSE WITH/WITHOUT PREWASH, HOT WATER HEAT

| MODELS COVERED BY THIS DRAWING | |
|---|---|
| 44DR | 70DRFFPW |
| 66DRPW | 80DRHDPW |
| | |

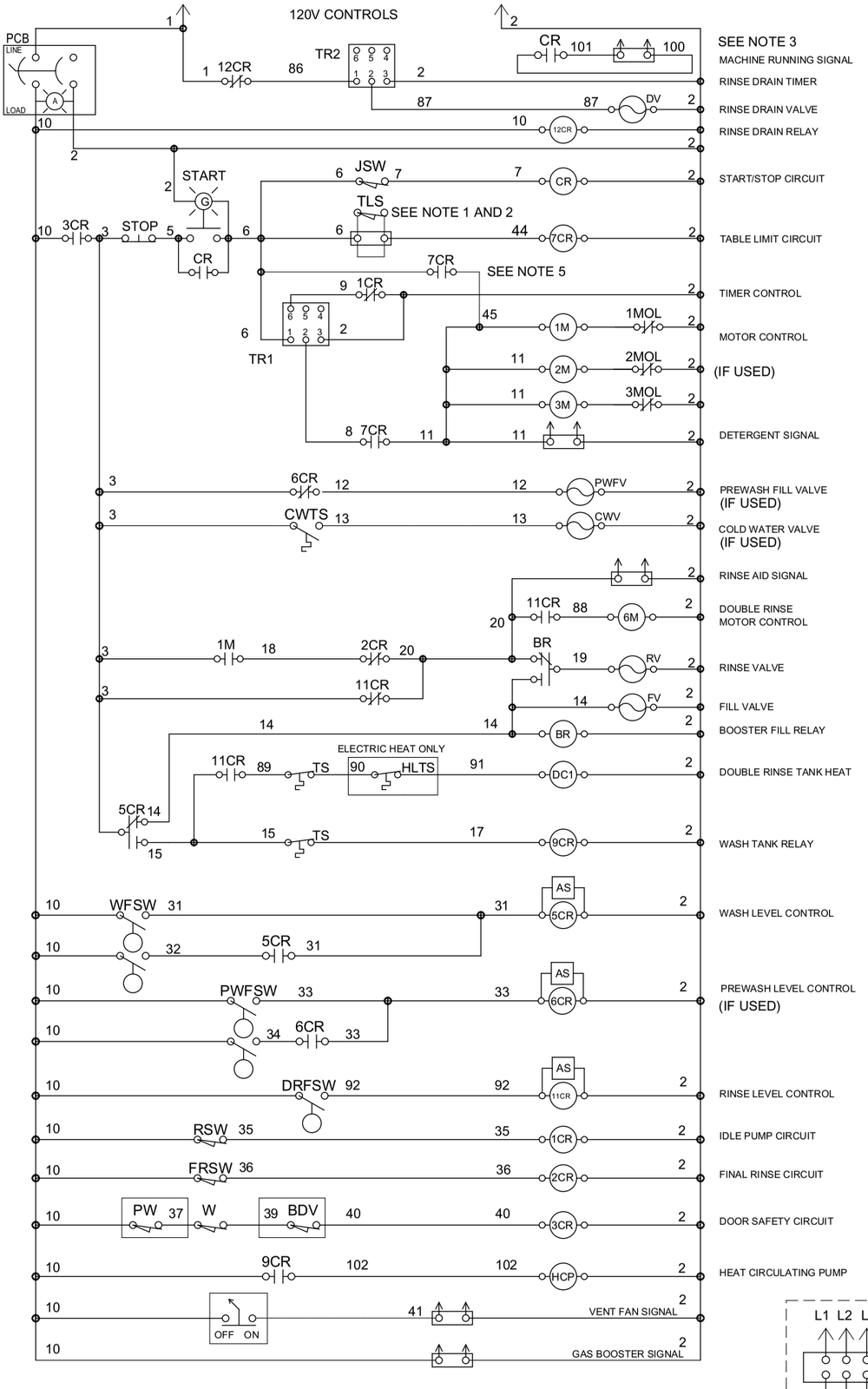


| | |
|---|---|
| 1CR | RACK SWITCH RELAY |
| 2CR | FINAL RINSE SWITCH RELAY |
| 3CR | DOOR SAFETY SWITCH RELAY |
| 4CR | RINSE FILL RELAY |
| 5CR | WASH FILL RELAY |
| 6CR | PREWASH FILL RELAY |
| 7CR | TABLE LIMIT SWITCH RELAY |
| 9CR | WASH HEAT RELAY |
| 11CR | DOUBLE RINSE FILL RELAY |
| 12CR | RINSE DRAIN RELAY |
| 1M | DRIVE MOTOR CONTACTOR |
| 1MOL | DRIVE MOTOR OVERLOAD |
| 2M | PREWASH MOTOR CONTACTOR |
| 2MOL | PREWASH MOTOR OVERLOAD |
| 3M | WASH MOTOR CONTACTOR |
| 3MOL | WASH MOTOR OVERLOAD |
| 5M | BLOWER MOTOR CONTACTOR |
| 5MOL | BLOWER MOTOR OVERLOAD |
| 6M | DOUBLE RINSE MOTOR RELAY |
| AS | ARC SUPPRESSOR |
| BDV | BLOWER DOOR SWITCH |
| BWR.SW. | BLOWER SWITCH |
| CR | HOLD-IN RELAY |
| CWTS | COLD WATER THERMOSTAT |
| CWV | COLD WATER VALVE |
| DC1 | DOUBLE RINSE HEATER CONTACTOR |
| DV | RINSE DRAIN VALVE |
| FRSW | FINAL RINSE SWITCH |
| FU | FUSE/FUSE BLOCK |
| FRFV | FINAL RINSE FILL VALVE |
| FRSW | FINAL RINSE SWITCH |
| HCP | HEAT CIRCULATING PUMP |
| HLTS | HIGH LIMIT THERMOSTAT |
| JSW | JAM SWITCH |
| PCB | POWER SWITCH/CIRCUIT BREAKER |
| PW | PREWASH DOOR SWITCH |
| PWFV | PREWASH FILL VALVE |
| PWFSW | PREWASH FLOAT SWITCH |
| R | RINSE DOOR SWITCH |
| RFSW | RINSE TANK FLOAT SWITCH |
| RSW | RACK SWITCH |
| T1 | CONTROL TRANSFORMER |
| T2 | DR MOTOR TRANSFORMER |
| TLS | TABLE LIMIT SWITCH |
| TR1 | IDLE PUMP TIMER |
| TR2 | DRAIN VALVE TIMER |
| TS | THERMOSTAT |
| W | WASH DOOR SWITCH |
| WFSW | WASH TANK FLOAT SWITCH |
| WFV | WASH FILL VALVE |

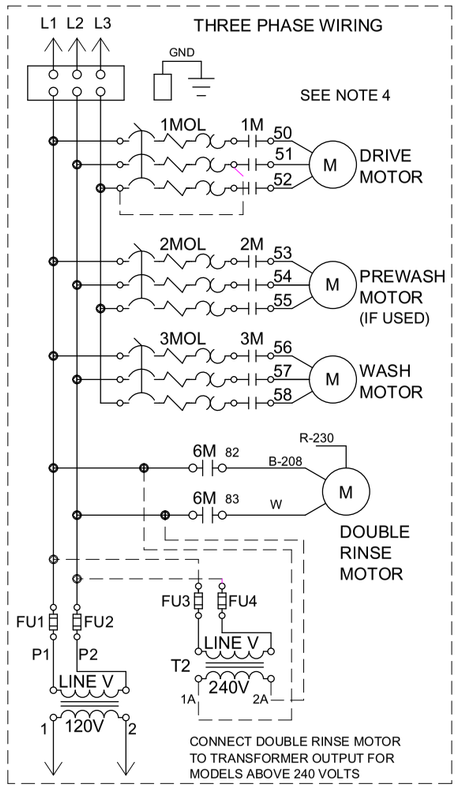


DIAGRAM STATE
POWER OFF
DOORS CLOSED
TANKS EMPTY

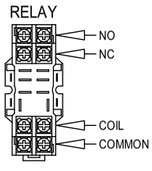


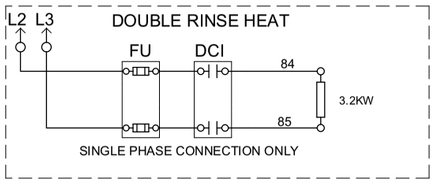


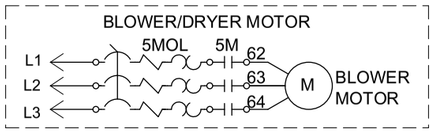


NOTES:

1. 7CR IS USED ONLY WITH A TABLE LIMIT SWITCH OR MRA TABLE. WHEN A TABLE LIMIT SWITCH IS NOT USED INSTALL JUMPER.
2. WHEN TABLE LIMIT SWITCH OR MRA IS USED, CONNECT SWITCHES BETWEEN WIRES 10 AND 44 ON TERMINAL BLOCK IN PANEL.
3. USED FOR MACHINE RUNNING SIGNAL.
4. DRIVE MOTOR CONNECTED SINGLE PHASE FOR 200-240 VOLT MODELS.
5. ON MODELS WITH SIDE LOADER OPTION DRIVE MOTOR CONTACTOR 1M IS CONNECTED TO WIRE #45 INSTEAD OF WIRE #11.

| MODELS COVERED BY THIS DRAWING | |
|---|---|
| 44 | |
| 44 LT | |
| 54 | |
| | |

NOTES:

1. 7CR IS USED ONLY WITH A TABLE LIMIT SWITCH OR MRA TABLE. WHEN A TABLE LIMIT SWITCH IS NOT USED INSTALL JUMPER.
2. WHEN TABLE LIMIT SWITCH OR MRA IS USED, CONNECT SWITCHES BETWEEN WIRES 6 AND 44 ON THE TERMINAL BLOCK IN THE PANEL.
3. USED FOR MACHINE RUNNING SIGNAL.
4. DRIVE MOTOR CONNECTED SINGLE PHASE FOR 200-240 VOLT MODELS.
5. ON MODELS WITH SIDE LOADER OPTION CONVEYOR DWELL SWITCH IS CONNECTED TO WIRE #45 INSTEAD OF WIRE #11.
6. ON MODELS WITH MULTIPLE ELECTRIC CONNECTIONS, MAKE HEATER POWER CONNECTIONS AT THE HEATER FUSE BLOCK.

| | |
|---|---|
| 1CR | RACK SWITCH RELAY |
| 2CR | FINAL RINSE SWITCH RELAY |
| 3CR | DOOR SAFETY SWITCH RELAY |
| 5CR | WASH FILL RELAY |
| 7CR | TABLE LIMIT SWITCH RELAY |
| 1M | DRIVE MOTOR CONTACTOR |
| 1MOL | DRIVE MOTOR OVERLOAD |
| 3M | WASH MOTOR CONTACTOR |
| 3MOL | WASH MOTOR OVERLOAD |
| 5M | BLOWER MOTOR CONTACTOR |
| 5MOL | BLOWER MOTOR OVERLOAD |
| AS | ARC SUPPRESSOR |
| BC- | BOOSTER CONTACTOR/STEAM VALVE |
| BDV | BLOWER DOOR SWITCH |
| BR | BOOSTER RELAY |
| BWR.SW. | BLOWER SWITCH |
| CR | HOLD-IN RELAY |
| CDS | CONVEYOR DWELL SWITCH |
| FRSW | FINAL RINSE SWITCH |
| FU | FUSE/FUSE BLOCK |
| FV | FILL VALVE |
| HC- | HEAT CONTACTOR/STEAM VALVE |
| HLTS | HIGH LIMIT THERMOSTAT |
| JSW | JAM SWITCH |
| PCB | POWER SWITCH/CIRCUIT BREAKER |
| RSW | RACK SWITCH |
| RV | RINSE VALVE |
| T1 | CONTROL TRANSFORMER |
| TLS | TABLE LIMIT SWITCH |
| TR1 | IDLE PUMP TIMER |
| TS | THERMOSTAT |
| W | WASH DOOR SWITCH |
| WFSW | WASH TANK FLOAT SWITCH |

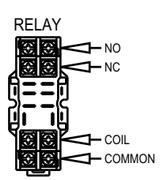


DIAGRAM STATE
POWER OFF
DOORS CLOSED
TANKS EMPTY

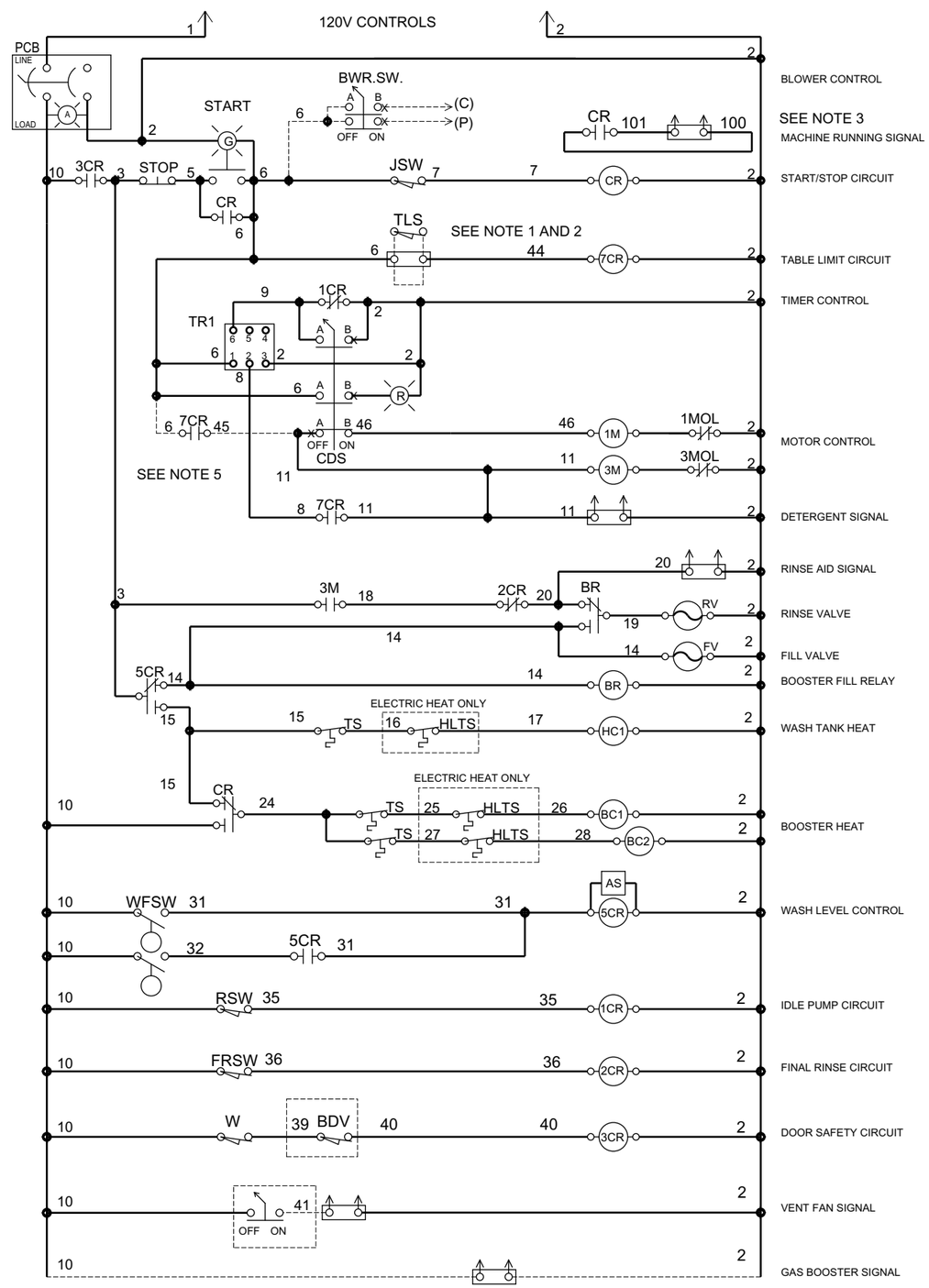


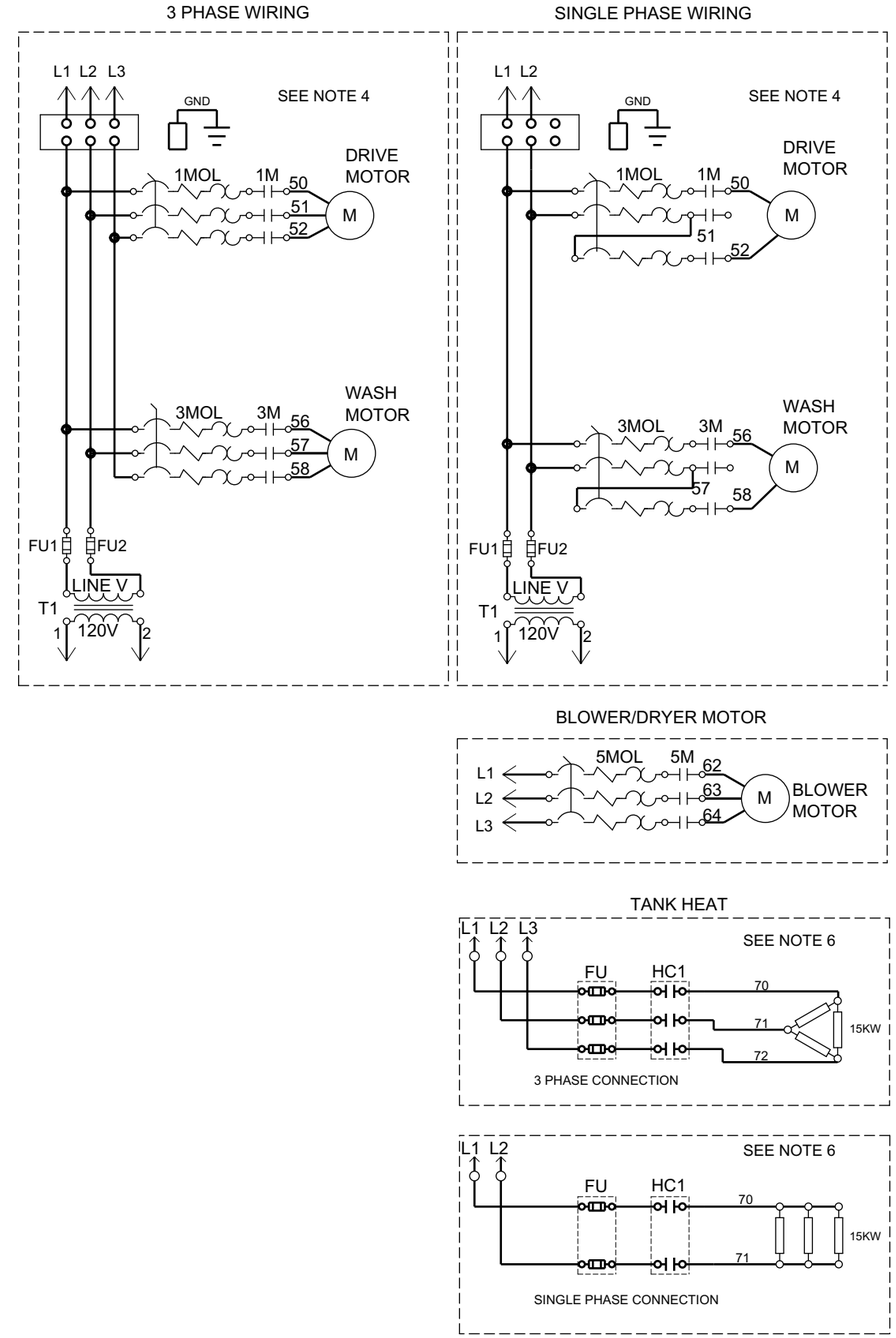


CUSTOMER TO SUPPLY RATED VOLTAGE/PHASE/Hz, AS SPECIFIED PER ORDER,TO DISCONNECT SWITCH. ALL POWER SUPPLIED TO EACH CONNECTION POINT MUST COMPLY WITH ALL LOCAL ELECTRIC CODES.

| | | | |
|---|---|---|---|
| DR.BY | J.MCALLISTER | SCALE | NONE |
| DATE | 04JAN05 | SHEET 1 OF 1 | |

| REV. | DESCRIPTION | DATE | BY |
|---|---|---|---|
| | | | |
| | | | |
| | | | |

| REV. | DESCRIPTION | DATE | BY |
|---|---|---|---|
| | | | |
| | | | |
| | | | |

Champion
The Dishwashing Machine Specialists

SINGLE TANK RACK CONVEYOR
STEAM/ELECTRIC HEAT CONVEYOR DWELL

B 701938 REV.