Champion®

The Dishwashing Machine Specialists

Technical Manual

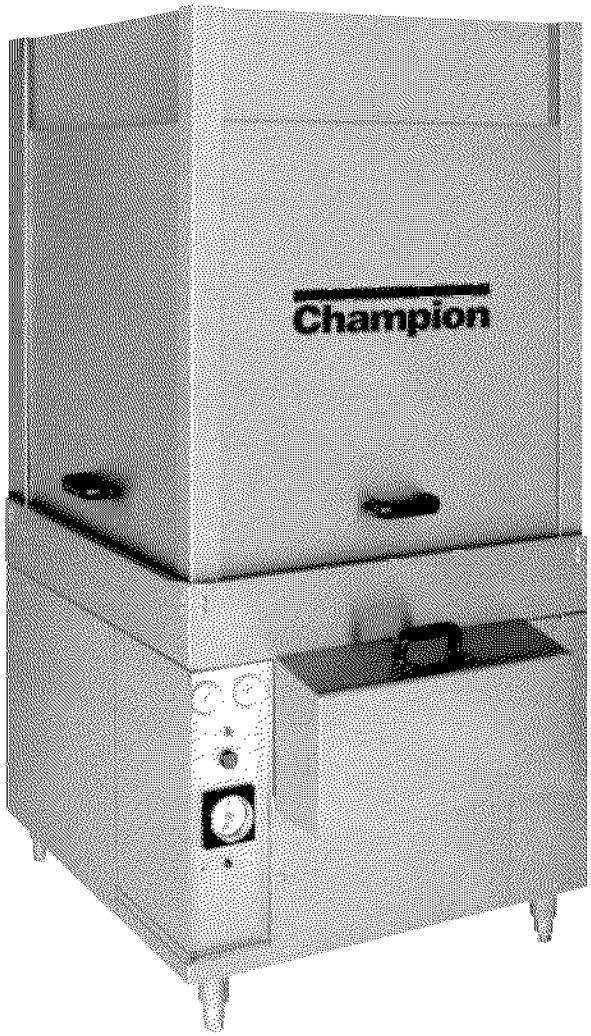

Pot, Pan, and Utensil Door-type

Models:
PP-28
PP-28 Corner
PP-28 Front Feed
PP-28 Straight Thru

May, 2006

Champion Manual P/N 109844 Rev C

P. O. Box 4149
Winston-Salem, North Carolina 27115-4149
336/661-1556 Fax: 336/661-1660

2674 N. Service Road
Jordan Station, Ontario, Canada L0R 1S0
905/562-4195 Fax: 905/562-4618

www.championindustries.com

Complete the information below so it will be available for quick reference.

Model Number _____ Serial Number_____

Voltage and Phase_____

Champion Service Agency_____ Phone_____

_____

Champion Parts Source_____ Phone_____

_____

Champion Service:

Champion (USA)
Phone: 1 (336) 661-1556
1 (800) 858-4477
Fax: 1 (336) 661-1660

Champion (Canada)
Phone: 1 (905) 562-4195
1 (800) 263-5798
Fax: 1 (905) 562-4618

We strongly recommend that you Fax your orders.

NOTE: When calling to order parts, be sure to have the model number, serial number, voltage and phase of your machine.

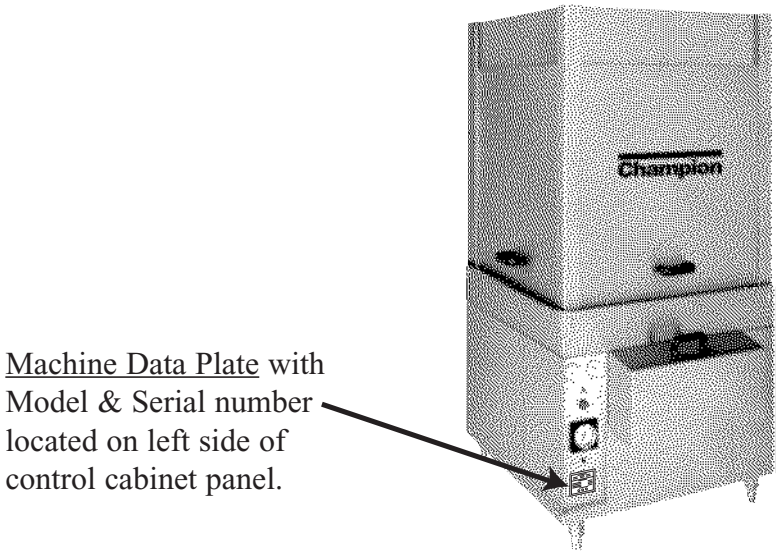

REVISION HISTORY

Revision Date	Revised Pages	Serial Number Effectivity	Comments
11/01/02	All		First issue of manual and replacement parts
10/13/03	46-47	—	Inserted tracks for all models
10/13/03	58-61	J1789	Inserted new piping drawings - moved pressure gauge after solenoid valve.
06/21/04	48-49	—	Corrected part number 314187 to 314185 drain overflow. Added overflow gaskets and o-rings.
5/26/06	45	-----	Changed rinse arm rebuild kit to P/N 900786

REVISION RECORD (CONT.)

CONTENTS

LIST OF FIGURES

CONTENTS (CONT.)

LIST OF FIGURES

LIMITED WARRANTY

Champion Industries Inc. (herein referred to as Champion), P.O. Box 4149, Winston-Salem, North Carolina 27115, and P.O. Box 301, 2674 N. Service Road, Jordan Station, Canada, L0R 1S0, warrants machines, and parts, as set out below.

Warranty of Machines: Champion warrants all new machines of its manufacture bearing the name "Champion" and installed within the United States and Canada to be free from defects in material and workmanship for a period of one (1) year after the date of installation or fifteen (15) months after the date of shipment by Champion, whichever occurs first. [See below for special provisions relating to glasswashers.] The warranty registration card must be returned to Champion within ten (10) days after installation. If warranty card is not returned to Champion within such period, the warranty will expire after one year from the date of shipment.

Champion will not assume any responsibility for extra costs for installation in any area where there are jurisdictional problems with local trades or unions.

If a defect in workmanship or material is found to exist within the warranty period, Champion, at its election, will either repair or replace the defective machine or accept return of the machine for full credit; provided, however, as to glasswashers, Champion's obligation with respect to labor associated with any repairs shall end (a) 120 days after shipment, or (b) 90 days after installation, whichever occurs first. In the event that Champion elects to repair, the labor and work to be performed in connection with the warranty shall be done during regular working hours by a Champion authorized service technician. Defective parts become the property of Champion. Use of replacement parts not authorized by Champion will relieve Champion of all further liability in connection with its warranty. In no event will Champion's warranty obligation exceed Champion's charge for the machine. The following are not covered by Champion's warranty:

a. Lighting of gas pilots or burners.
b. Cleaning of gas lines.
c. Replacement of fuses or resetting of overload breakers.
d. Adjustment of thermostats.
e. Adjustment of clutches.
f. Opening or closing of utility supply valves or switching of electrical supply current.
g. Cleaning of valves, strainers, screens, nozzles, or spray pipes.
h. Performance of regular maintenance and cleaning as outlined in operator's guide.
i. Damages resulting from water conditions, accidents, alterations, improper use, abuse, tampering, improper installation, or failure to follow maintenance and operation procedures.
j. Wear on Pulper cutter blocks, pulse vanes, and auger brush.

Examples of the defects not covered by warranty include, but are not limited to: (1) Damage to the exterior or interior finish as a result of the above, (2) Use with utility service other than that designated on the rating plate, (3) Improper connection to utility service, (4) Inadequate or excessive water pressure, (5) Corrosion from chemicals dispensed in excess of recommended concentrations, (6) Failure of electrical components due to connection of chemical dispensing equipment installed by others, (7) Leaks or damage resulting from such leaks caused by the installer, including those at machine table connections or by connection of chemical dispensing equipment installed by others, (8) Failure to comply with local building codes, (9) Damage caused by labor dispute.

Warranty of Parts: Champion warrants all new machine parts produced or authorized by Champion to be free from defects in material and workmanship for a period of 90 days from date of invoice. If any defect in material and workmanship is found to exist within the warranty period Champion will replace the defective part without charge.

DISCLAIMER OF WARRANTIES AND LIMITATIONS OF LIABILITY, CHAMPION'S WARRANTY IS ONLY TO THE EXTENT REFLECTED ABOVE. CHAMPION MAKES NO OTHER WARRANTIES, EXPRESS OR IMPLIED, INCLUDING, BUT NOT LIMITED, TO ANY WARRANTY OF MERCHANTABILITY, OR FITNESS OF PURPOSE. CHAMPION SHALL NOT BE LIABLE FOR INCIDENTAL OR CONSEQUENTIAL DAMAGES. THE REMEDIES SET OUT ABOVE ARE THE EXCLUSIVE REMEDIES FOR ANY DEFECTS FOUND TO EXIST IN CHAMPION DISHWASHING MACHINES AND CHAMPION PARTS, AND ALL OTHER REMEDIES ARE EXCLUDED, INCLUDING ANY LIABILITY FOR INCIDENTALS OR CONSEQUENTIAL DAMAGES.

Champion does not authorize any other person, including persons who deal in Champion dishwashing machines to change this warranty or create any other obligation in connection with Champion Dishwashing Machines.

SAFETY SUMMARY

Safety Symbols

- The following symbols appear throughut this manual alerting you to potential hazards. Statements associated with each symbol are printed on *italics.*

WARNING:
Warning statements indicate any condition or practice that could result in personal injury or possible loss of life.

CAUTION:
Caution statements indicate any condition or practice which, if not strictly observed or remedied, could result in damage to or destruction of the dishwasher.

NOTE:
Note statements indicate any condition or practice which, if observed, will help in the safe completion of a task.

General Safety Rules

- The following general safety rules must be observed in addition to the specific cautions and warnings presented in this manual.
- Your Champion pot and pan washer uses hot water to clean and sanitize a variety of wares. **Machine surfaces and wares become hot during and immediately following normal operations. Operators should use caution when loading and unloading wares from the machine.**
- Operators must NOT bypass a safety interlock or control(s) to operate unit.
- The service and maintenance instructions contained in this manual are intended for qualified service personnel. **These instructions assume that you are trained in basic electricity and mechanical theory. If you are not a trained technician, then do not attempt to adjust or repair the dishwasher as serious personal injury or damage to the dishwasher may result.**

INTRODUCTION

Welcome to **Champion**....
and thank you for allowing us to take care of your dishwashing needs.

This manual covers several models. Model numbers are shown on the front cover.

Your machine has been completely assembled, inspected, and thoroughly tested at our factory before it was shipped to your installation site.

This manual contains:

- Warranty information
- Operation and cleaning instructions
- Maintenance instructions
- Troubleshooting guide
- Basic service information
- Replacement parts lists
- Electrical schematics

Complete and return your warranty registration card within ten (10) days after the installation of your machine.

All information, illustrations and specifications contained in this manual are based upon the latest product information available at the time of publication. **Champion** constantly improves its products and reserves the right to make changes at any time or to change specifications or design without notice and without incurring obligation.

For your protection, factory authorized parts should always be used for repairs.

Replacement parts may be ordered from your **Champion** authorized service agency. When ordering parts, please supply the model number, serial number, voltage and phase of your machine, the part number, part description, and quantity.

GENERAL

This manual covers the Champion pot, pan, and utensil door type washing machine. This machine is fully automatic and is equipped with a 7.5 Hp wash pump motor. This model is available for straight-through, corner or front-loading operation.

Standard Features

- Balanced door system
- Detergent/chemical connection provisions
- Low water tank heat protection
- Recessed, front-mounted controls
- Six-inch diameter vent connections
- Hold-down grid
- Ten-inch shelf on front-loading machines
- Field convertible to corner model
- Interchangeable upper and lower wash and rinse arms
- Door safety switch on each door
- Enclosure panels (front and sides)
- External lift-out refuse basket
- Fully automatic wash and rinse cycle
- Tank heater (choice of electric, steam coils or steam injectors)

Options & Accessories

- Stainless Steel Booster (interplumbed and intewired)

  Steam: 40˚F/23˚C-70˚F/39˚C rise (built in booster)
  (externally mounted with cover for corner model)

  Electric: 40˚F/23˚C rise (built-in)(externally mounted with cover for corner model)
  70˚F/39˚C rise (externally mounted with cover)

NOTE:
ALL electric boosters require separate electrical connection.

- Exhaust Fan, 1/3Hp
- Stainless steel rack

Basket Rack	P/N 109584
Pan Rack	P/N 109585
Utility Rack	P/N 109586
Bake Sheet Rack	P/N 109587

INSTALLATION

Unpacking

Your dishwasher was completely assembled, inspected, and thoroughly tested at our factory before shipment to your installation site.

- The pot, pan, and utensil washer is shipped on a single pallet.
- Optional components may have been shipped separately.
- Check your packing list thoroughly.

NOTE:
Care should be taken when lifting the machine. The piping under the base can be damaged. Remove the dishwasher front panels if lifting from the front with a forklift.

BE SURE TO COMPLETE AND RETURN THE WARRANTY CARD INCLUDED WITH YOUR MACHINE

NOTE:
The installation of your pot, pan, and utensil washer must meet all applicable health and safety codes and conform to good trade practice.

1. Immediately after unpacking your machine, inspect for any shipping damage. If damage is found, save the packing material and contact the carrier immediately.
2. Check the interior of the dishwasher for the following items stowed inside:
   - 1 set of dishracks
   - Upper and lower spray arm assemblies
   - Warranty information packet
3. Move the dishwasher to its permanent location. Move the machine while on the skid. Do not lift on any of the piping under the base.

PERMANENT PLACEMENT

Special Tools-

- Bubble Level (3ft)

Perform the following steps to place the dishwasher in its permanent location.

1. Before moving the dishwasher into position, inspect the location site to ensure the electrical, plumbing, and ventilation services (if required) are provided in the correct locations. Compare the site connections with the dishwasher to ensure they will match when the machine is set in its permanent location.
2. Remove the skid.
3. Place a 3ft. level on top of the pot and pan washer or inside the dishwasher on the track assembly to level the dishwasher front to back. Adjust the level by turning the adjustable feet. Level side to side with the level place on the top of the unit.
4. Remove the control cabinet cover and the right side panel for the booster cabinet (if applicable), to expose the electrical terminal connection points.

Plumbing Connections

WARNING:
The installation of this unit must conform to local codes or, in the absence of local codes, to all National Codes governing plumbing, sanitation, safety and good trade practices.

1. Incoming water supply line is 1” for water connections. Connect the hot water supply at the final rinse piping connection located at the top right rear of machines with boosters.
2. A “Y” line strainer is provided by Champion for machines without boosters. A pressure reducing valve (PRV) is provided by Champion for machines with built-in boosters.
3. If the incoming hot water supply pressure exceeds 25 psi [173 kPa], a PRV must be installed and set to 20-22 psi [138-151 kPa] flowing pressure. The PRV may be purchased from Champion or supplied by others.
4. Install a manual shut-off valve in the steam and water supply lines to accommodate servicing the machine. The valve should be the same size as or larger than the supply line.
5. Provide a suitable gravity drain to connect to the 1-1/2" NPT machine drain connection.

Electrical Connections

NOTE:
Electrical and grounding connections must comply with the National Electrical Code and/or Local Electrical Codes.

WARNING:
When working on the unit, disconnect the electric service and tag it to indicate work is being done on that circuit.

1. A qualified electrician should compare the electrical specifications on the machine electrical connection plate (located inside the control cabinet) to the electrical power supply before connecting to the incoming service at a fused disconnect switch.
2. The unit is phased at the factory. The phasing of the incoming service can be checked by the rotation of the pump shaft. The pump shaft should rotate in the direction of the discharge, indicated by an arrow on the casting. If the machine is out of phase, make changes at the control cabinet main terminal block and not at the motor.
3. A knock-out plug is provided at the rear of the control cabinet for electrical service connections. Electric booster requires a separate connection.

Ventilation

1. Stainless steel watertight ducting should be installed **INSIDE** the 6” diameter vent collar on the top of the machine.
   - The machine requires 200 CFM @ 1/4" (SP), [95 Liters/sec].
2. There shall be a minimum of 8 air changes per hour of kitchen air.

CAUTION:
Exhaust air should not be vented into a wall, ceiling, or concealed space of a building. Condensation will cause damage.

CHEMICAL CONNECTIONS

!! ATTENTION POT AND PAN WASHER OWNER!!

Your pot and pan washer is designed to work best with **liquid commercial dishwashing chemicals**. **Detergents must be a commercial non-foaming liquid**. Champion strongly recommends that you contact a qualified chemical supplier to supply these products and to set-up your machine for the first time.

1. Use a qualified detergent/chemical supplier.
2. Labeled control circuit connection terminals are provided in the control cabinet for detergent and rinse agent dispensing equipment (supplied by others).
3. Refer to the wiring schematic for connection points. Signal connection points include:
   - Detergent signal 120VAC, 1 Amp Max amp load.
   - Rinse aid signal 120VAC, 1 Amp Max amp load.
4. A removable black plastic plug is provided on the lower left side of the wash tank, behind the panel, for the installation of the detergent conductivity cell.
5. The detergent input tube should be located above the conductivity cell and the scrap screens.
6. Liquid product is available in 1 to 30 gallon containers and should be located within the sight of the operator.

CAUTION:
*Never use residential nonautomatic dishwashing detergents such as **JOY™** or **DAWN™**, or any other liquid designed for the handwashing of wares, in your machine. Extreme foaming inside your Champion pot and pan washer will cause operation problems.*

Rinse Aid Connections

1. Rinse aid injection system should be installed by a qualified detergent/chemical company.
2. A removable plug in the fill line on top of the machine, at the rear, will be the rinse injection point.
3. Since the final rinse is controlled by the machine timer, rinse aid is only introduced during this cycle.
4. Refer to the wiring schematic for the connection points in the form of two terminal screws.
3. The reservoir should be placed within sight of the operator with machine doors in the open position. The liquid product is available in 1 to 6 gallon containers.

il
N

Installation of Dish Tables

1. Load and unload machine openings are 28-7/8”, therefore, table width should be 29” with a 3/4” turned down lip. (33-1/2” max entry).
2. The formed down lip of the dishtable should be placed inside the machine. The dishtable should be pitched toward the dishwasher for proper draining by adjusting its leveling feet. The dishtable should be sealed to the dishwasher.

Completing Installation

WARNING:
Do not insert racks into machine before tanks fill with water. Operating pumps dry will cause pump seal damage and leakage that can result in a motor failure.

1. Remove any foreign material from inside the machine.
2. Check to ensure that drains and overflow pipes are operational and sealed.
3. Position scrap screens on supports above the tanks.
4. After plumbing and electrical connections are completed, fill the tank and wait 10 minutes. Check all plumbing connections for leaks.
5. Drain the tank and check the drain lines for leaks.

INITIAL START-UP

Check your site to ensure that all plumbing and electrical connections have been properly made by qualified personnel. Check the installation of chemical dispensing systems. Perform the following steps to prepare your machine for operation.

1. Check the exterior of the machine for any foreign material and remove.
2. Check the interior of the machine for any foreign material and remove.
3. Remove the lower spray arms and the scrap screens.
4. Make sure that all loose tape, nut, bolts and paper have been removed from the interior.
5. Replace the scrap screen and clean if required.
6. Make sure that the upper and lower spray arms are in place and that the nozzles are clean. The arms are held in place by knurled retaining screws. The arms are interchangeable.
7. Check the chemical supply containers and fill as required. Detergent may be introduced by hand, for the first initial start up, on the top of the screens (follow chemical supplier's directions).
8. Open the water supply valve. Check for leaks and take any corrective action that may be needed.
9. Open the final rinse pet cock under the pressure gauge.
10. Check the drain and/or drain connections to ensure that drains are functional.
11. Turn the main power on at the breaker panel or fused disconnect switch.

BASIC OPERATION

Perform the following steps to prepare and load your wares for washing.

1. Scrap and rinse wares to remove any heavy food particles and other debris.
2. Place wares into rack.
3. Place rack into the machine and close all doors.
4. Flip the power toggle switch, located on the control cabinet, to **ON**.
5. The power **ON** red light will glow and the machine should begin to fill.
6. Wait until the machine has stopped filling. Check for leaks and observe the wash temperature gauge. The minimum wash temperature is 150˚F.
7. Turn the wash cycle timer face counterclockwise to stop (2 minutes). Push the GREEN start button, machine will start. The GREEN in-cycle light will remain on. During the final rinse (15 seconds) check the rinse temperature gauge. The minimum temperature for the final rinse is 180˚F.
8. If for any reason the doors are opened during the cycle, the machine will stop. Closing the doors will restart the machine where the cycle was stopped at timewise.
9. Check the Detergent/Rinse Aid feed during the machine operation.
10. For best results, clean the scrap screens and scrap baskets after each meal period. REPLACE the tank water every 8 hours of operation.
11. Check the chemical supply. Replenish any chemicals as needed.
12. Follow the Maintenance section of this manual for DAILY and WEEKLY maintenance.

CAUTION:
DO NOT *leave water in tank overnight.*

MAINTENANCE

The efficiency and life of your machine is increased by regularly scheduled preventive maintenance. A well maintained machine gives better results and service. An investment of a few minutes of daily maintenance will be worthwhile.

The best maintenance you can provide is to keep your machine clean. Components that are not regularly cleaned and flushed will clog and become inoperative.

Intervals shown in the following schedules represent an average length of time between necessary maintenance. Maintenance intervals should be shortened whenever your machine is faced with abnormal working conditions, hard water, or multiple shift operations.

CLEANING

Daily-Every 8 Hours of Operation

1. Turn power switch to **OFF**.
2. Drain the tank and flush with water.
2. Remove all scrap screens, scrap baskets and pull drain lever to drain water. Clean inside of tank and flush with clean water. Backflush scrap screens and basket until clean. **Do not strike screens or basket against solid objects.**
3. Remove the spray pipes. Remove the end plug from each spray pipe. Flush pipe and nozzles until clean. **Do not strike spray pipes against solid objects**. Check bearings in arms to ensure that they are clean of any debris and do not need replacing. Reinstall spray pipes.

At the End of Day

1. Drain the machine.
2. Check and clean scrap screens, scrap basket and pump suction screen.
3. Clean the spray arms.
4. Wash inside of machine with fresh water (tank, sides and top).

CAUTION:
Do not hose down the exterior of the machine with water.

5. Leave the doors open to aid in drying the interior of the machine.
6. Clean the exterior of machine with a mild soap solution.
6. Check detergent and rinse aid additive, replenish if necessary.
7. Report any unusual conditions to your supervisor.

PREVENTATIVE MAINTENANCE SCHEDULES

Daily Maintenance Requirements

1. Check the chemical supply containers and replenish as needed.
2. Inspect the scrap screens and baskets for bent or damaged parts.
3. Check the spray arm bearings and make sure that arms turn freely.
4. Check pump motor for leaks around shaft.
5. Check thermometers for proper readings.

Weekly Maintenance Requirements

1. Inspect for leaks including all piping and supply connections. Tighten or repair as needed.
2. Inspect the door for proper fit and ease of operation.
3. Check the operation of door safety switches.
4. Thoroughly clean any residue from the exterior of machine.
5. Check drain/overflow tube for leaks.

Semi-Annual Maintenance Requirements

1. Inspect all chemical connections and supply tubing for leaks.
2. Check the building drain system and clean as needed.

Yearly Maintenance Requirements

1. Inspect the installation site for cleanliness and any foreign material around the machine. Clean as required.
2. Check the overall condition of the machine. Replace any worn or damaged parts.

DELIMING

Your dishwasher should be delimed regularly as required. This will depend on the mineral content of your water. Inspect your machine interior for lime deposits. If deliming is required, a deliming agent should be used for best results. Consult your chemical supplier for proper type and procedures.

DANGER:
Deliming solution, rinse agents, or other acids must not come in contact with household bleach (sodium hypochlorite) or any chemicals containing chlorine, iodine, bromine, or fluorine. Mixing may cause hazardous gases to form. Consult your chemical supplier.

1. Remove all racks and wares from the machine.
2. Remove chemical pick-up tubes from the containers and place in a catch pan on the floor.
3. Place each tube in a container of fresh water and prime the chemical lines for several minutes to throughly flush chemical from the lines. Leave pick-up tubes out of their containers.
4. Drain the machine and refill with fresh water.
5. Spray interior walls with deliming solution and let stand for 5 or 10 minutes depending on the amount of buildup.
6. Open door and add deliming solution (per chemical supplier's instructions) directly in wash tank.

   • **PP-28 holds 24 US gallons (90.8 Liters) of water.**

7. Close doors.
8. Push start button and run an automatic cycle.
9. Repeat steps 3 and 4 if necessary.
10. Drain machine.
11. Open door and inspect interior for mineral deposits. Repeat steps 3-10 if required.
12. Run two (2) additional cycles to flush all deliming chemicals from machine.
13. Drain and refill machine.
14. Replace chemical pick up tubes in containers and prime chemical dispensing system.
15. Deliming process is complete.

LUBRICATION

There are two lubrication points on the pump assembly motor. The pump motor should be greased every 100 hours of running time with a high temperature and high pressure bearing grease. DO NOT over lubricate. One to two pumps of the grease gun is sufficient.

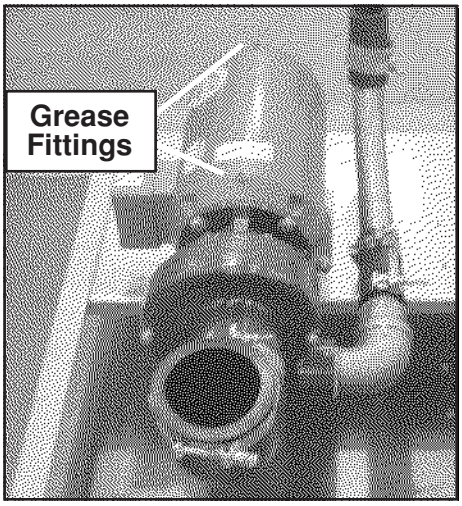

Figure 1
Lubrication Points

OPERATOR TROUBLESHOOTING

The first step in troubleshooting your dishwasher is knowing how it works under normal conditions. Review the Operation section in this manual for a description of proper loading, operator controls and basic operating procedures. Check the general condition of dishwasher:

- Does the machine appear to be level?
- Are the spray arms and screens clean and in place?
- Are the doors fully closed?

Some problems may be resolved by double-checking the supply connections to your dishwasher. **Perform the following steps to double-check your dishwasher service connections.**

- Push the POWER button on the pot and pan washer OFF, then turn the main power OFF at the main service disconnect switch or fused circuit breaker. Turn the main power ON and recheck the pot and pan washer operation.
- Turn the dishwasher water supply valve off and back on again.
- Check the water temperature supplied to the dishwasher. Are the building's water heaters operating properly.
- Check the flow of the building drain system. Are any drains clogged or running slow?
- Check the chemical dispensing supplies. Are the strainers clean? Are the pick-up tubes in the correct containers?

Proceed to the next page if the above checks did not resolve the trouble condition.

OPERATOR TROUBLESHOOTING (CONT.)

Troubleshooting Guide

In order to find the cause of a breakdown or abnormal operating condition in your dishwasher please ensure that:

1. All switches are ON
2. Drain and overflow tube are in place and seated
3. Wash and rinse nozzles are clean
4. Scrap screen(s) and scrap basket are properly positioned
5. Spray arms are in their proper positions
6. Thermostat(s) are at their correct setting
7. Sanitizer, detergent, and rinse additive dispensers are adequately filled
8. Doors are fully closed.

If a problem still exists, use the following table for troubleshooting

CONDITION	CAUSE	SOLUTION
Machine will not start	Door not closed	Make sure doors are fully closed
	Door safety switch faulty	Contact your service agency
	Start switch faulty	Contact your service agency
	Main switch off	Check disconnect
	No rack inserted	Place rack in unit
	Overload protector tripped	Reset overload in control box
Low or no water	Main water supply is turned off	Turn on house water supply
	Drain/overflow tube is not in place and seated	Place and seat drain tube
	Machine doors not fully closed	Close doors securely
	Faulty fill valve	Contact your service agency
	Stuck or defective float	Check floats and clean
	Clogged ‘Y’ strainer	Clean or replace
Continuous water filling	Stuck or defective float	Check floats and clean
	Fill valve will not close	Clean or replace
	Drain tube not in place	Look for drain tube in tank
Motor not running	Overload protector tripped	Reset overload in control box
	Defective motor	Contact your service agency
Wash tank water temperature is low when in use	Incoming water temperature at machine too low	Raise temperature to 140˚
	Defective thermometer	Check or replace
	Defective thermostat	Check for proper setting or replace
	Defective heater element	Check or replace
	Low steam pressure	Check steam supply pressure
	Defective steam trap	Check or replace
	Defective solenoid valve	Check or replace

CONDITION	CAUSE	SOLUTION
Insufficient pumped spray pressure	Clogged pump intake screen	Clean
	Clogged spray pipe	Clean
	Scrap screen full	Must be kept clean and in place
	Low water level in tank	Check drain and overflow tube
	Pump motor rotation incorrect	Reverse connection between L1 and L2 in control cabinet (3 phase only)
	Defective pump seal	Contact service agent
Insufficient final rinse or no final rinse	Faulty pressure reducing valve	Clean or replace
	Improper setting on pressure reducing valve	Set flowing water pressure to 20-22 psi [138-151 kPa]
	Clogged rinse nozzle and/or pipe	Clean with paper clip/delime
	Improper water line size	Have installer change to proper size
	Clogged 'Y' strainer	Clean or replace
Low final rinse temperature	Low incoming water	Check the booster (if supplied with machine) be sure the thermostat is set to maintain 180˚F/82˚C temperature. Check valve to be sure it is clean and operating.
	Defective thermometer	Check for proper setting or replace
Poor washing results	Detergent dispenser not operating properly	Contact detergent supplier
	Insufficient detergents	Contact detergent supplier
	Food Soil concentration too high in wash tank	Drain tank, clean and refill every 2 hours of operation or after each meal period.
	Wash water temperature too low	See condition "Wash Tank Water Temperature" above
	Wash arm clogged	Clean
	Wash arm not rotating	Clean arm. Check bearing, replace if necessary.
	Improperly scraped dishes	Check scraping procedures
	Ware improperly placed in rack	Use proper racks. Do not overload racks
	Improperly cleaned equipment	Unclog wash sprays and rinse nozzles to maintain proper pressure and flow conditions. Overflows must be open. Keep wash water as clean as possible.
	Electric elements or steam coils has soil/lime buildup	Clean and delime

BASIC SERVICE

This next section provides photos, illustrations and basic instructions for the electrical service and replacement of the main components. It does not cover all components such as the wash arm supports, hoses or panels. These repairs require simple observation and basic mechanical skill and therefore are not included in this manual.

WARNING:
Machine surfaces are hot during and after normal operation.

WARNING:
When working on the pot and pan washer, disconnect the electrical service and place a red tag at the disconnect switch to indicate work is being done on the circuit.

WARNING:
Use extreme caution when testing circuits while power is applied to the machine.

Fill/Rinse Solenoid Valves

There are two different types of valves used on the PP-28; Hot Water and Steam valves, both of which are rated 120VAC. The steam booster and steam fill valves come with a four screw pattern on the body. In all cases these valves must be installed with the coil above the valve body. Repair kits include spring, piston, and diaphragm. The electrical solenoid coil is replaceable as well. When ordering the replacement components as well as the complete valves, specify the size and type needed.

Vacuum Breaker

The vacuum breaker is located on the top of the machine providing a anti-siphoning protection. The diaphragm is replaceable by removing the bell shaped top and unscrewing the body.

Dual Float Switches

The tank has a dual float switch assembly. The float switch is on a 24 VAC circuit. When the tank is empty and both floats are down, the switch for the float will be in a **NO** (Normally Open) position calling for the tank to fill with no heat. When both floats rise to the top the switch will be in a **NC** (Normally Closed) position. The tank heat will be activated and the fill will stop.

Tank Heat

The tank heat can be electric, steam coils or steam injectors.

Electric: Uses 10KW elements that are coated with a special alloy to protect against detergents in the tank. The element circuit is protected by a thermostat and a HI-Limit switch in the tank.

Steam Coils: Use a 120 volt power to a steam solenoid in a closed loop coil heat exchanger using a diaphragm trap. The coil circuit is protected by a thermostat in the tank.

Steam Injectors: Use a 120 volt power to a steam solenoid valve that injects steam through a two muffler system. A one-way check valve prevents back-siphoning should the valve fail. This circuit is also controlled by a thermostat located in the tank.

BASIC SERVICE (CONT.)

Hi-Limit Switch

On machines with electric tank and boosters, a separate thermostat is installed that interrupts the power if the temperature exceeds a preset limit. When the over temperature condition is resolved, the red button located on top of the switch, must be pushed to reset the power to the elements.

Pressure Reducing Valve (PRV)

A 3/4” PRV for the water supply or 1-1/4” for steam booster, is required if the incoming water supply exceeds 20-22 PSI(138-151kPa) for water or 30 PSI for steam flowing pressure. The PRV’s should be installed in the incoming supply lines before the machine connection.

Water Hammer Arrestor

Whenever a booster heater is installed in the final rinse line a water hammer arrestor shall be installed between the booster outlet and the final rinse inlet valve. This helps to prevent the knocking or hammering sound of the water as it flows through the pipes.

Wash Pump/Motor

The wash pump/motor is a closed centrifugal pump that is rated 7-1/2 HP running at 3600 RPM. The motor is rated 3 phase, 60 hertz, and is multi-voltage.

ELECTRICAL SERVICE

Fuse Blocks—120VAC Control Voltage

Two fuse blocks, located in the lower front corner of the main control cabinet protect the main control transformer. Each fuse block holds a fuse. The fuses are marked 1FU and 2FU on the electrical schematic.

To Replace the fuse:

- Disconnect power to the machine at the main service switch.
- Flip the tab on the top of the fuse block to open the block.
- Remove the fuse and replace it.
- Close the fuse block and turn the main power on.
- If the fuse blows again, DO NOT INCREASE THE FUSE SIZE.
- DETERMINE THE CAUSE OF THE OVERLOAD.

ÊFig. 2 shows the fuse block opened and the fuse exposed.

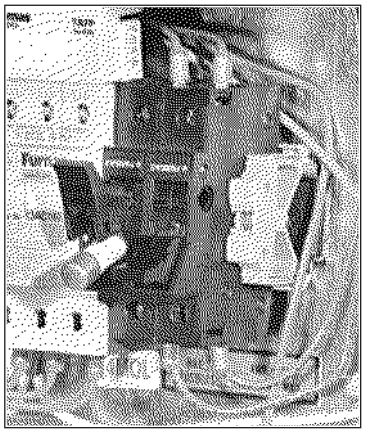

Figure 2
Fuse Blocks

Motor Overloads

Motor overloads are located to the left of the fuse blocks inside the control cabinet. The motor has an overload to protect it from line voltage electrical overloads. In addition, an auxilary set of switch contacts are built into the overload. The switch contacts disconnect 120VAC power to the motor contactor coils in the event of an overload condition.

Note the Switch Lever on the Overload.

- If the switch lever is off with the “0” showing then the overload has tripped on an overload.

To Reset the Motor Overload:

- Flip the starter switch to the On position.
- Run the dishwasher and test the AMP draw of the motor in question. If the motor checks okay then there may be a wiring problem or the overload may be defective.

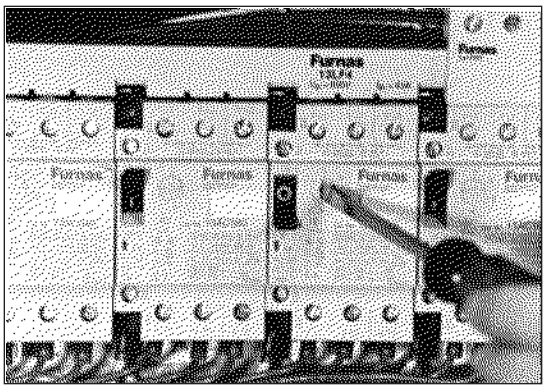

Figure 3
Motor Overloads

To Replace a Motor Overload:

- Disconnect the wires to the overload.
- Release the mounting catch on the front side of the overload, push forward and lift out.
- Snap the new overload into place and reconnect the wires.

To adjust the overload setting:

The screwdriver in Fig.3 is positioned to adjust the motor overload AMP setting.

- Read the FLA motor amps that applies for the machine voltage on the Motor Nameplate.
- Turn the setting to 125% over the FLA .

ELECTRICAL SERVICE (CONT.)

Pump Timer

Refer to Fig.4 and Fig. 5

There are two timers in control cabinet of the PP-28, one is located on the face of the cabinet panel and controls the pump time, while the other one is located inside the top of the control cabinet and controls the final rinse time.

The Pump Timer controls the amount of time that the pump will run during the wash cycle. This time is set from the factory and pegged for the minimum time of 2 minutes. You are able to select the time settings from 2 minutes to 5 minutes depending on the amount of soiled product. (See Fig. 4 for timer position).

The Final Rinse Timer controls the amount of time for sufficient final rinse sanitizing. This timer is an adjustable timer for 0 to 30 seconds. The factory presets this timer for 16 seconds. (See Fig. 5 for timer in cabinet).

The final rinse timer has the following user defined settings:

1. Adjustable timer range
2. Timer knob setting
3. Indicator light (ON when timer is counting)
4. 50 Hz or 60 Hz setting on the back/bottom of the timer

Image unavailable at time of printing.

Figure 4
Wash Pump Timer

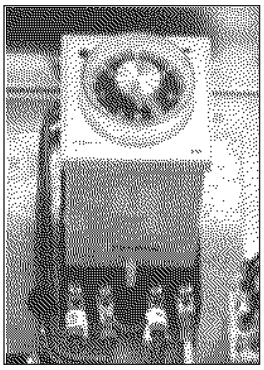

Figure 5
Final Rinse Timer

To Replace a Timer:

- Disconnect power to the machine at the main service switch.
- Remove the defective timer and install the replacement.
- Adjust the new timer setting to match the setting of the original timer.

ELECTRICAL SERVICE (Cont.)

Automatic Fill/Low Water Heat Protection

Dual Float Switches –

Refer to Fig. 6
Each tank contains a dual float. The device consists of an angled stem containing two reed switches. Two stainless steel ball floats slide over the stem and are free to move up and down. The floats contain magnets. When the float moves on the stem, it opens and closes its associated reed switch inside the stem. The reed switches control relays. The relays control the automatic fill and heat for different parts of the machine. Float switches and their relays operate on 24VAC.

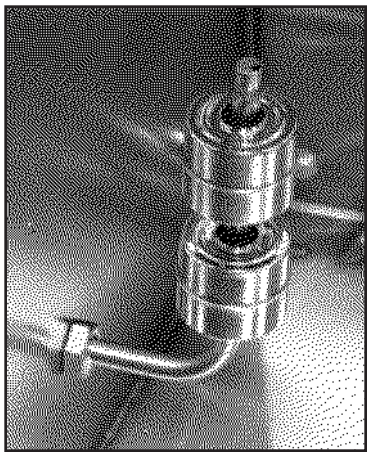

Figure 6
Dual Float Switch

Circuit Explanation –

The following is a general explanation of the float switch circuit. Refer to the electrical schematic on your machine for a detailed description of the individual floats, relays, and wiring.

Bottom Float and Reed Switch:

- The bottom float controls the heat.
- When the bottom float is down, the bottom reed switch contacts are open.
- When the bottom float is up, the bottom reed switch contacts close.

Top Float and Reed Switch:

- The top float controls a fill valve.
- When the top float is down, the top reed switch contacts are open.
- When the top float is up, the top reed switch contacts are closed.

Initial Fill –

- When the tank is completely empty, both floats are down and their reed switch contacts are open.
- The control relay for the float switch is de-energized.
- The fill valve for the tank is energized and the tank begins to fill with water.
- As the water level in the tank rises, the bottom float begins to move up.
- When the bottom float is completely up, its NO reed switch contacts close.
- This prepares the heat circuit, but the heat **Does Not** energize at this time.
- The tank continues to fill until the top float is completely up.
- The top float's NO reed switch contacts close. Its control relay energizes.
- The fill valve de-energizes.
- The heat circuit energizes through the float switch and the contacts of the control relay.

During Normal Operation –

- If the water level in a tank falls below the level of the top float, the top float moves down and its reed switch contacts open.
- When the water level falls below the level of the bottom float, the bottom float moves down and its reed switch opens.
- The control relay de-energizes. The fill valve energizes and refills the tank.
- The heat circuit will de-energize until the water level in the tank raises the top float again.
- The bottom float keeps the heat circuit ready as long as the water level is above the level of the bottom float.

ELECTRICAL SERVICE (Cont.)

Thermostat Locations and Adjustments

Refer to Fig. 7
Electric tank heat is controlled by two thermostats.

1. The control thermostat which regulates the temperature.
2. The high limit thermostat which protects from overheating.

Location:
Both thermostats are located on front of tank, inside a black enclosure box behind the front access panel.

Adjustment:
The Control Thermostat has an adjustment screw on one side.
- The thermostat is wired Normally Closed.
- Turn the adjustment screw clockwise to increase the temperature in the tank and counterclockwise to decrease the temperature in the tank.

The High Limit Thermostat is not adjustable.
It contains a red reset button in its center.
- The red button pops out if the temperature in the tank exceeds 210˚F/99˚C.
- Press the red button in to reset the high limit. Determine the cause of the high temperature condition.

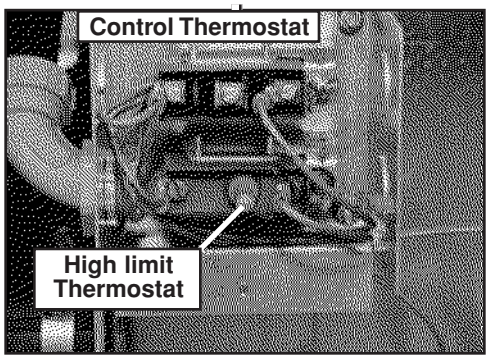

Figure7
Tank Heat Thermostats

Refer to Fig. 7 and Fig. 8
Electric Booster Heat is controlled by two thermostats.

1. The control thermostat which regulates the temperature.
2. The high limit thermostat which protects from overheating.
3. The tank(s) have a control and a high limit thermostat.

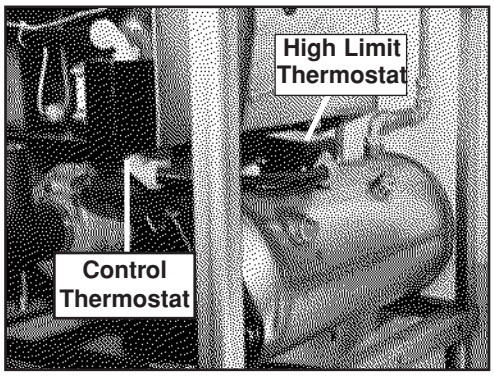

Figure 8
Booster Thermostat Locations

Location:
The control thermostat is enclosed in a black box mounted on the front of the wash tank behind the front access panel.
The high limit thermostat is enclosed in a box mounted on top of the booster tank.

Adjustment:
The control thermostat has an adjustment screw on one side.
- The thermostat is wired Normally Closed.
- Turn the adjustment screw clockwise to increase the booster tank temperature and counterclockwise to decrease the booster tank temperature.

The high limit thermostat is a bimetal snap design.
It is not adjustable.
- A button with a red dot in the center pops out when the temperature exceeds 210˚F/99˚C.
- Press the red reset button in to reset the high limit. Determine the cause of the high temperature condition.

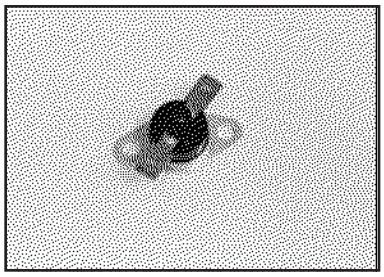

Figure 9
Booster – High Limit Thermostat

ELECTRICAL SERVICE (Cont.)

Heater Element Wiring – Booster Tank and Wash Tank Heater Elements

Refer to the illustrations and follow the steps below to properly install terminal jumpers and to make line power connections to a replacement element.

Step 1. Hold the element assembly with the calrod coils facing toward you.
Step 2. Match your element coil to Configuration A, B, C, or D.
Step 3. Rotate your element coils to match the correct configuration.
Step 4. Flip the element over and match your element to the correct terminal configuration.
Step 5. Install terminal jumpers according to the illustration for your voltage requirement.
Step 6. Install the element and make your line connections 1L1, 1L2, or 1L3 per the illustration.

Configuration A
Booster tank element
View of calrod coils

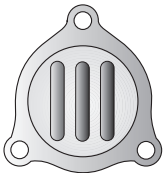

Terminal Connections view of element

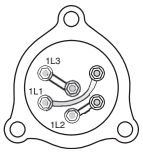

208-240V/3 Phase
Delta Connection

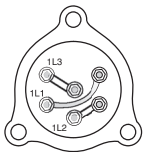

480V/3 Phase
575V/3 Phase
Delta Connection

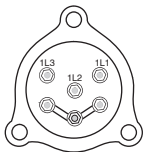

208-240V/3 Phase
Wye Connection for
380-415V/3 Phase

Configuration B
Booster tank element
View of calrod coils

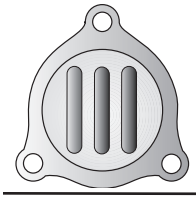

Terminal Connections view of element

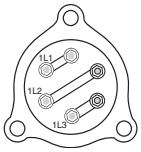

208-240V/3 Phase
Delta Connection

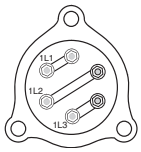

480V/3 Phase
575V/3 Phase
Delta Connection

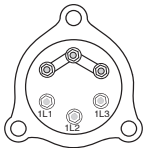

208-240V/3 Phase
Wye Connection for
380-415V/3 Phase

Configuration C
Booster tank element
View of calrod coils

Terminal Connections view of element

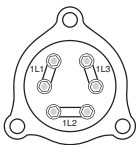

208-240V/3 Phase
Delta Connection

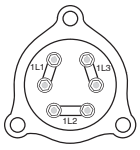

480V/3 Phase
575V/3 Phase
Delta Connection

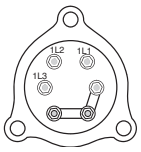

208-240V/3 Phase
Wye Connection for
380-415V/3 Phase

Configuration D
Wash tank element
View of calrod coils

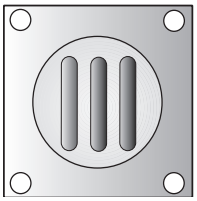

Terminal Connections view of element

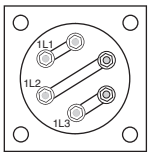

208-240V/3 Phase
Delta Connection

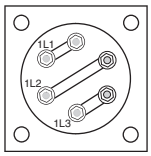

480V/3 Phase
575V/3 Phase
Delta Connection

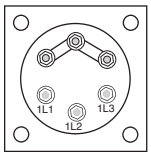

208-240V/3 Phase
Wye Connection for
380-415V/3 Phase

Motors

Motor Specifications

Voltage: Standard motors are multi-voltage
Low voltage: 208-230VAC
High voltage: 460VAC or 575VAC only

Phase: Motors are rated as three phase.

Wiring Connections:

Refer to the diagrams below for 3 phase motor lead wiring.

Low voltage 208-230V/3PH

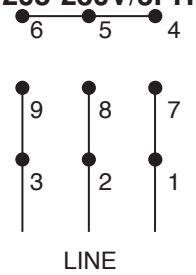

High Voltage 460V/3PH

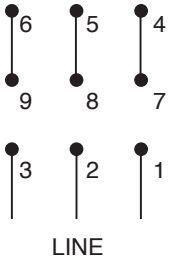

575V/3PH Only

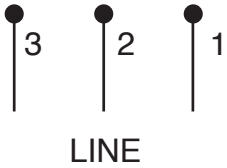

Troubleshooting:

Motor will not run:

1. Check incoming power to control cabinet.
2. Check for tripped manual motor starter (overload) in control cabinet. (Refer to Motor Overload service section for the proper setting)
3. Check power at motor contactor.

Motor runs hot and trips motor starter overload:

1. Check for proper voltage between L1-L2, L2-L3, L1-L3 for 3 phase.
2. Check FLA on motor leads L1, L2 and L3 using amp tester. (Motor full load amp (FLA) ratings are stamped on motor nameplate).

Motor Replacement:

1. Disconnect the power to the machine.
2. Disconnect the wires at the motor junction box.
3. **Make note of the motor connections in order to phase the replacement correctly.**
4. Install the new motor and check for proper rotation.
5. Proper shaft rotation is clockwise looking at the rear of the motor.
6. Motor rotation can be reversed by switching L1 and L2 on 3 phase motors. Single phase motor rotation cannot be reversed
7. Replacement motors are available as complete assemblies.
8. Champion cannot provide replacement bearings, stators, or rotors for motor repair parts.

Dual Float Switches –

Troubleshooting:

The dual float controls fill and heat circuits.

Identifying a Dual Float Problem:

The most common trouble conditions associated with a dual float failure are:

1. The tank fills constantly.
2. The tank heat will not come on.

Inspect the Dual Float:

1. Be sure that the dual float assembly is clean and free of scale build-up.
2. Be sure that the stainless steel balls on the float assembly move up and down freely.

In addition to checking the float operation, perform the following—

System Checks:

1. All drain valves are fully closed.
2. Incoming water supply Flow Pressure is 20-22 psi [138-151 kPa].
3. Fuses in control cabinet are good (Electric Heat Only).
4. Tank Heat thermostats and/or High limit thermostats operate correctly.
5. Booster Heat thermostats and/or High limit thermostats operate correctly.

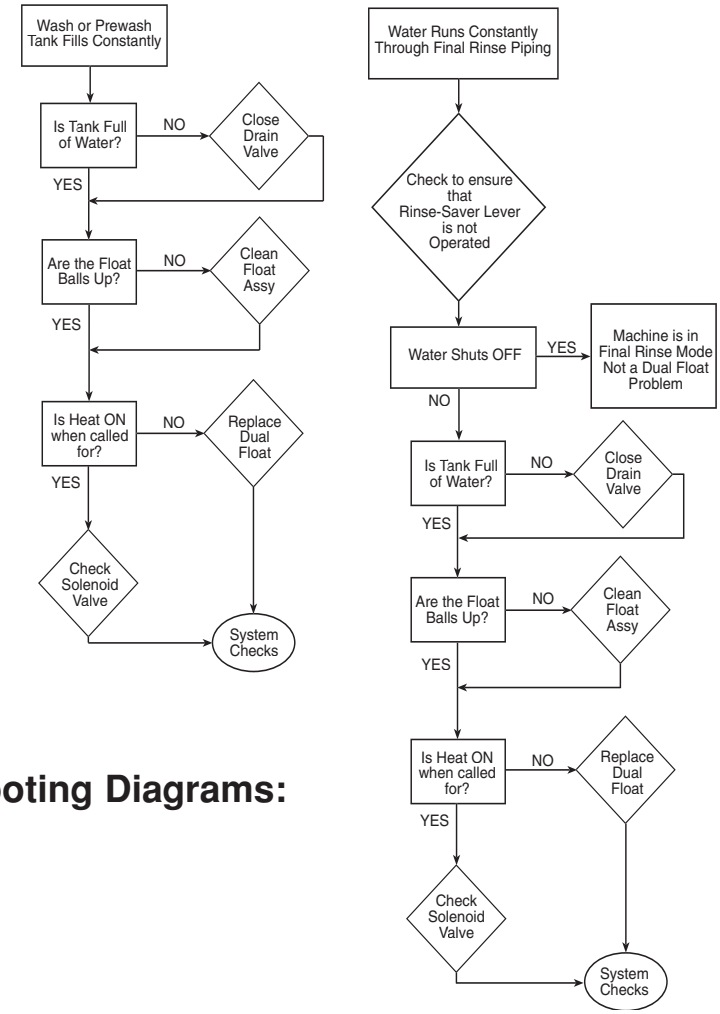

Dual Float Troubleshooting Diagrams:

COMPONENT REPLACEMENT

Pressure Reducing Valve (PRV) Adjustment

1. Turn the main water supply to machine off.
2. Flip the power toggle switch to OFF.
3. Turn off main incoming power.
4. Loosen the locknut on the adjusting screw in the top of the PRV.
5. Turn the adjusting screw clockwise to increase the flowing pressure to the machine.
6. Turn the adjusting screw counterclockwise to reduce the flowing pressure to the machine.
7. Observe the pressure reading on the control panel to confirm the proper setting of 20-22 psi/138-151 kPa during the final rinse.
8. Tighten the locknut on the adjusting screw.
9. If the proper pressure cannont be acheived then check the water pressure before the PRV, it may be too low, or replace the PRV.

Vacuum Breaker

The vacuum breaker is located at the top right rear corner of the unit. It prevents siphoning of water from the unit back in into the potable water supply. The vacuum breaker contains a replaceable float assembly.

CAUTION:
Use extreme caution when servicing the breaker to prevent damage to the final rinse manifold.

1. Turn the main water supply to the machine off.
2. Flip the power toggle switch to OFF.
3. Turn off main incoming power.
4. Remove the retaining screw in the vacuum breaker cap. Remove cap.
5. Remove the vacuum breaker top with a wrench turning counterclockwise.
6. Remove the float assembly with a pair of needle nose pliers.
7. Inspect the bore of the vacuum breaker. If pitted, replace the entire vacuum breaker. Otherwise, install the repair kit.
8. Reassemble in the reverse order.
9. Restore the power and water, and check for proper operation.

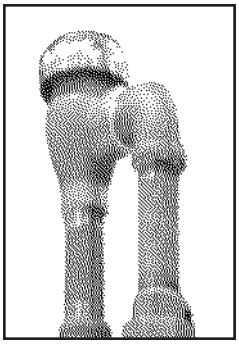

Figure 10
Vacuum Breaker

COMPONENT REPLACEMENT (CONT.)

Parker Solenoid Valves

These valves have a plunger and diaphragm in seperate enclosures. The diaphragm is between the body and the bonnet. Be careful not to damage the machined faces while the valve is apart. The electrical data for the valve will be found on the coil housing. Make sure that voltage and frequency are correct.

To remove or change the coil:

1. Turn the main water supply to machine off.
2. Flip the power toggle switch on machine to OFF.
3. Turn off incoming power.

CAUTION:
De-energize coil before removal from valve or equipment damage and/or personal injury may result.

4. Take out the retaining screw at the top of the coil housing.
5. Lift entire coil assembly off the enclosing tube.
6. Replace existing coil or replace new coil in reverse order.
7. Put on data tag and insert screw tightly.
8. Restore power and water.
9. Check for leaks and proper operation.

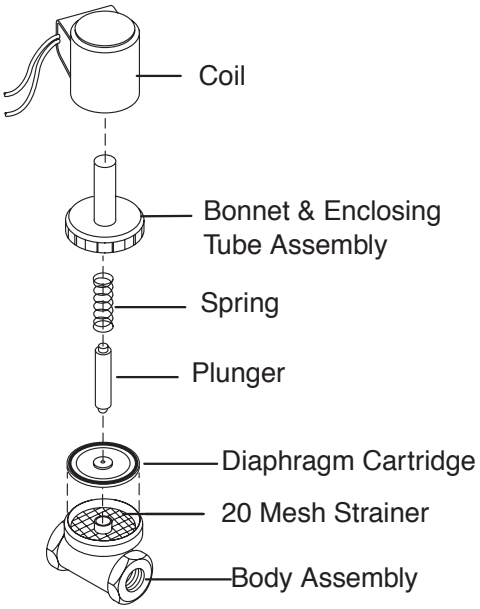

Figure 11
Parker Solenoid Valve

To disassemble the valve:

1. Turn the main water supply to machine off
2. Flip the power toggle switch to OFF.
3. Turn off incoming power.
4. Unscrew the bonnet and enclosing tube assembly from the valve body.
5. Carefully lift of the bonnet and the enclosing tube assembly. Don't drop the plunger.
6. Lift out the o-ring seal and diaphragm cartridge.
7. Inspect the valve body. If pitted, replace entire valve assembly. Otherwise, install repair kit.

To reassemble valve:

1. Place the diaphragm cartridge in the body with the pilot port extension up.
2. Hold the plunger with the synthetic seat against the pilot port.
3. Put o-ring in place, lower bonnet and enclosing tube assembly over the plunger.
4. Screw bonnet assembly snugly down on the body assembly.
5. Turn on incoming water.
6. Restore power.
7. Check for leaks and proper operation.

COMPONENT REPLACEMENT (CONT.)

Asco Solenoid Valves

All solenoid operators and valves should be cleaned periodically. The time between the cleanings will vary on the water conditions and the amount of usage. In general, if the voltage to solednoid is correct, sluggish valve operations, excessive noise or leakage will indicate that cleaning is required. Clean strainer or filter when cleaning the valve. Replace any worn or damaged parts.

Disassembly/Reassembly of Solenoid:

1. Turn the main water supply to machine off.
2. Flip the power toggle switch on the machine to OFF.
3. Turn off incoming power.
4. Disconnect conduit, coil leads, and grounding wire.
5. Snap off red cap from the top of solenoid base sub-assembly.
6. Push down on solenoid. Then using a suitable screwdriver, insert blade between solenid and nameplate/retainer. Pry up slightly and push to remove.
7. Remove solenoid from solenoid base sub-assembly.
8. Remove spring washer from solenoid base sub-assembly.
9. Unscrew solenoid base sub-assembly from valve body.
10. Remove internal solenoid parts for cleaning or replacement.
11. Reassemble in reverse order of disassembly.

Disassembly/Reassembly of Valve:

1. Follow instructions above to remove solenoid.
2. Unscrew solenoid base and remove core assembly, core spring, core guide and base gasket.
3. For normal maintenance (cleaning), it is not necessary to remove the valve seat. However, for valve seat removal use a 7/16” thin wall socket wrench.
4. Remove bonnet screws and valve bonnet from the valve body. Then remove the following parts: piston spring, support, lip seal, piston assembly, body passage eyelet or body passage tube, body passage gasket, inner and outer body gaskets or large body gasket. (See Fig. 12).
5. Remove aspirator tube, disc, and disc washer from piston.
6. All parts are now available to clean or replace. If parts are damaged or worn, install a complete repair kit.
7. Reassemble valve in reverse order.
8. Lubricate the solenoid base gasket and the surface of piston which contacts the lip seal with high-grade silicone fluid.
9. Lubricate large body gasket or inner and outer body gaskets, body passage gasket, and disc with a high-grade silicone grease.
10. Position the following parts in the valve body: support, body passage gasket, body passage eyelet or body passage tube, inner or outer body gaskets or large body gasket.
11. Reassemble piston assembly following the views provided as per Fig. 12.

COMPONENT REPLACEMENT (CONT.)

Disassembly/Reassembly of Asco Valve (cont.)

12. Position lip seal, flanged end outward, onto piston assembly. Install piston assembly with lip seal into support in valve body cavity.
13. Replace piston spring, valve bonnet, and bonnet screws. Torque bonnet screws in a crisscross manner to 144 ± 15 in-lbs [16.3 ± 1.7Nm].
14. If removed, replace valve seat with a small amount of thread compound on male threads to avoid possible leaking. Torque valve seat 65 ± 15 in-lbs [7.3 ± 1.7Nm].
15. Replace solenoid base gasket, core assmebly, core spring, core guide, and solenoid base sub-assembly. Torque solenoid base sub-assembly to 175 ± 25 in-lbs [19.8 ± 2.8Nm].
16. Install solenoid and make electrical hookup.
17. Restore water and power.
18. Check for proper operation.

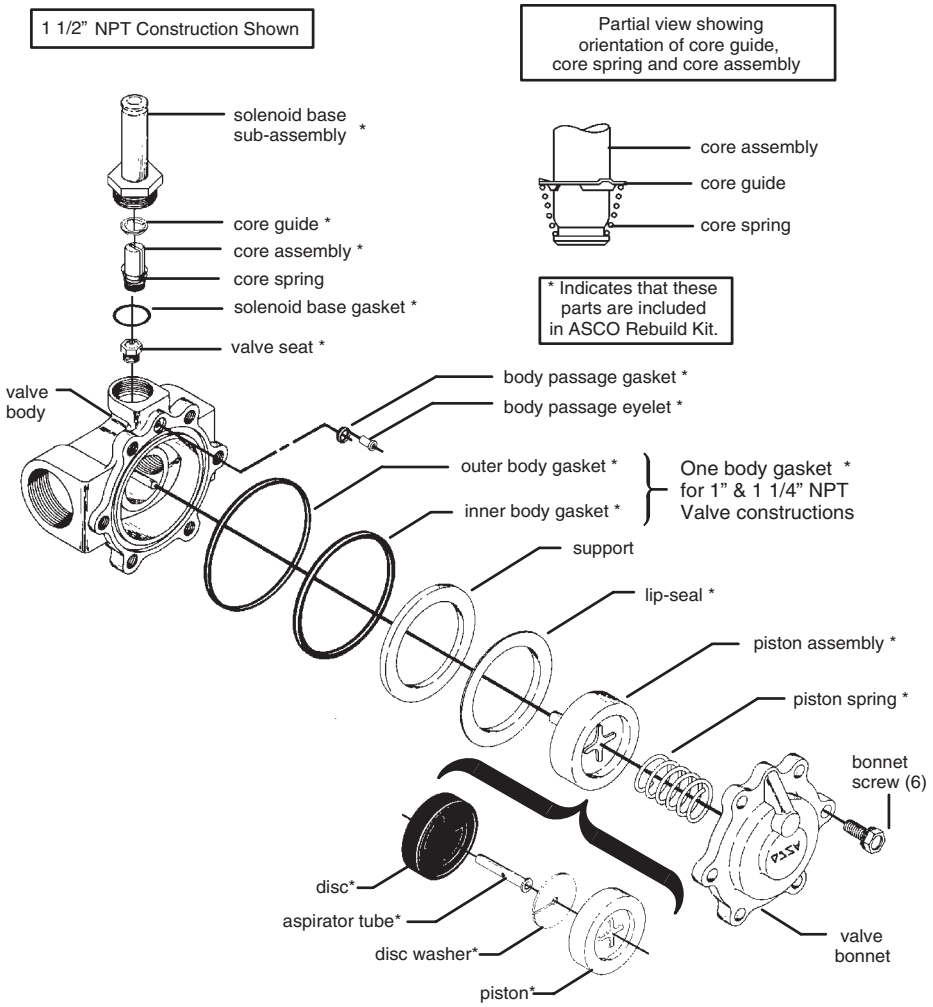

Figure 12
Asco Solenoid Valve

Silencer

Whenever a booster heater is installed in the final rinse line, a water hammer arrestor shall be installed after the valve and before the final water connection. The arrestor is factory precharged at 22PSI and can handle a maximum shock pressure of 200PSI. A shrader valve is provided for checking and recharging.We do not provide any repair parts for this component.

Water Line Strainer

A 1” line strainer is shipped with the PP-28. The line strainer is installed on the incoming water supply line before the machine. The line strainer has a removable screen that should be cleaned at least once a year depending on your water conditions, in some instances it may be as often as every there months. There are no replaceable kits for the strainer. These are supplied as complete units.

To clean the line strainer:

1. Turn the main water supply to the machine off.
2. Turn amchine on the off to bleed the pressure off the line.
3. Remove the retaining nut from the line strainer and extract the screen.
4. Flush the screen with water. If the screen is damaged, replace the line strainer.
5. Reassemble in reverse order.

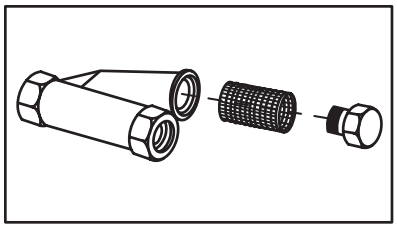

Figure 13
Line Strainer

COMPONENT REPLACEMENT (CONT.)

Wash Tank Heater and High Limit Thermostat

The wash tank heater is mounted on the side wall in the bottom of the tank. It maintains the wash tank temperature at a minimum of 160˚F/70˚C. The heater is protected from a low water condition by a surface mounted high limit switch.

Check the high limit thermostat before replacing a suspected heater:

1. Flip the power toggle switch to off.
2. Turn off the main incoming power.
3. Remove the lower left hand side panel.
4. Push the manual reset on the high limit. Pull one lead from the high limit and check for continuity. Replace if open.
5. Apply a coating of heat sink compound, P/N 110563, to the high limit before mounting to base.

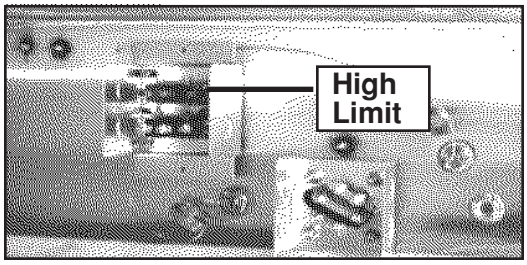

Figure 14
Rear View of High Limit

To replace wash tank heater:

1. Perform steps 1-5 from above.
2. Open the front door and remove the lower spray arms.
3. Remove the scrap screens amd pump intake strainer. (See Fig 12 for element location in tank).
4. From the outside bottom of tank, disconnect the heater wires and remove the retaining nuts. (See Fig 13 for the rear view of the machine).
5. Remove the element from the inside of the tank.
6. Apply gasket to element and insert into tank.
7. Install retaining nuts.
8. Reconnect heater wires.
9. Replace panel.
10. Restore power to machine.
11. Check for leaks and proper operation.

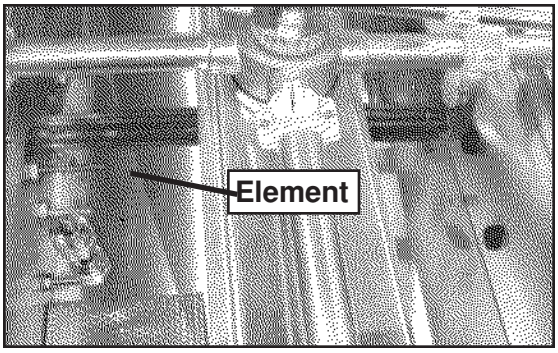

Figure 15
Tank Element Placement

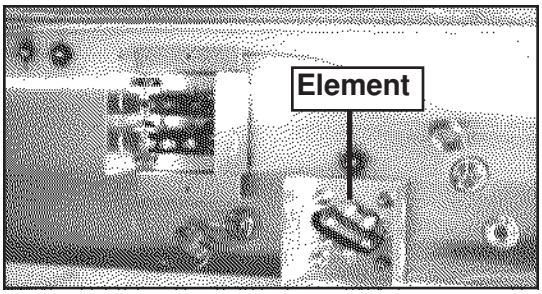

Figure 16
Rear View of Element

COMPONENT REPLACEMENT (CONT.)

Booster Tank Heater and High Limit Thermostat

The booster assembly is mounted either to the side on the base or externally from the machine. It raises the incoming water temperature to a minimum of 180˚F/82˚C for the final rinse cycle. The heater is protected from a low water condition by a surfcae mounted high limit thermostat

Check the high limit thermostat before replacing a suspected heater:

1. Flip the power toggle switch to OFF.
2. Turn main incoming power off.
3. Remove the side access panel.
4. Push the manual reset on high limit. Pull one lead from high limit and check for continuity. Replace if open.
5. Apply a coating of heat sink compound, P/N 110563, to the high limit base before mounting to tank.

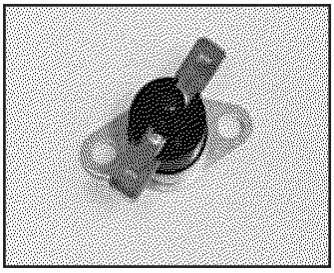

Figure 17
Booster High Limit

To replace the booster tank heater:

1. Perform steps 1-5 from previous page.
2. Turn off incoming water supply.
3. Remove drain plug in bottom of booster and drain any remaining water from tank.
4. Remove element cover from booster to expose elements. (Fig 15 & Fig 16)
5. Disconnect the heater wires.
6. Remove the (3) retaining element nuts and washers from bad element(s).
7. Remove element(s).
8. Replace booster element gasket(s).
   DO NOT USE OLD GASKET.
   DO NOT APPLY RTV SEALANT TO HEATER FLANGE.
9. Install the new element(s) and tighten the retaining nuts in a cross pattern until the element and gasket are tight and snug.
   DO NOT OVERTIGHTEN THE RETAINING NUTS. DOING SO WILL DAMAGE THE TANK STUDS.
10. Replace the drain plug in the booster tank.
11. Reconnect the element wires.
12. Replace element cover back on booster.
13. Restore power and water.
14. Check the element and the drain plug for leaks. Check for proper operation.
16. Reinstall panel.

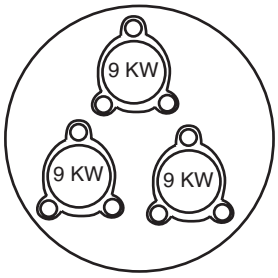

Figure 18
Typical 40˚ Rise Booster

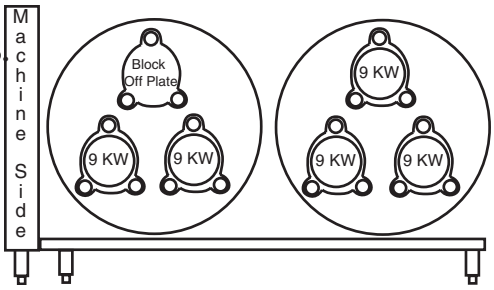

Figure 19
Typical 70˚ Rise Booster

COMPONENT REPLACEMENT (CONT.)

Wash Pump/Motor

The wash pump/motor assembly is bolted to bracket that bolted directly to the base of the machine. The panel can be removed to gain easier access to the pump assembly.

To disassemble the pump/motor assembly:

1. Disconnect the power source to the motor.
2. Disconnect electrical connections. Tag wires carefully to preserve that the correct rotation. Loosen pump base.
3. Loosen the eight 3/8-16” bolts holding the volute to the motor bracket. Volute may be left in the piping.
4. Slide pump away from the volute until the impeller is exposed.
5. Hold pump and motor shaft with large locking pliers. Remove the 3/8-16” impeller lock bolt. The use of a socket wrench is suggested.
6. Remove the impeller from the shaft. Two screwdrivers or other suitable levers against the bracket will help, or you can use a puller to remove the impeller. Do not bend the impeller shrouds.
7. Remove pump seal from shaft by using two screwdrivers as levers. **Discard the old pump seal.**
8. Remove seal seat. **Discard the old seat.**
9. Inspect the shaft sleeve. Depending on the amount of damage, it should be replaced unless it can be polished to remove the score markings by using an extra fine emory cloth. Make sure that keyway area is clean.
10. Remove the shaft sleeve by heating the sleeve up to 300˚F(149˚C). This will loosen up the sleeve and you should be able to slip it from the shaft using a bearing puller. **Do not try to force the sleeve off as this will cause unecessary damage to sleeve and shaft.**
11. Replace any needed component(s).

To reassemble pump/motor assembly:

1. Clean motor shaft if any solvents or liquids have been used, dry throughly. Apply soap or non-petroleum based product, as lubrication, to the shaft. Make sure that entire sleeve area is covered.
2. Install new sleeve by tapping into place using a hollow rod or 1” pipe nipple.
3. Clean the seat cavity and motor shaft throughly. Place a small amount soap or non-petroleum based product on the seat cup or “O” ring and start it into the seat cavity. **Do not scratch the seat surface**. A rough or dirty cloth will scratch this surface, so be extremely careful. Tap the seat into the cavity by using a wooden dowel, plastic rod, etc. Again, make sure that you do not scratch the surface.
4. Place a small amount of vegetable oil or non-petroleum based product on shaft and slip seal, with the carbon side toward the seat, over the motor shaft. Push as far as it will go without having to force it.
5. Install the new sleeve gasket over the shaft.

COMPONENT REPLACEMENT (CONT.)

To reassemble pump/motor assembly (cont.):

6. Place impeller on the shaft making sure that keyway aligns.
7. Install keyway using a punch and hammer, driving it in as far as possible.
8. Install the lock bolt and washer. Tighten down securely.
9. Install new volute gasket. Make sure that all of the mating surfaces of the gasket joint is cleaned to the bare metal.
10. Mount volute onto the motor brackets. Install (2) bolts, making sure that they are finger tight. Turn the shaft by hand and listen for any rubbing of the impeller inside of the volute. If there is rubbing, reposition the voulte by tapping on the side of the volute. It will probably need to be adjusted by moving up and to the left or right. Continue installing the remaining bolts making sure that the impeller does not rub.
11. Reconnect the electrical connections as previously tagged.
12. Jog switch to determine if the rotation is correct, if not reconnect.
13. Restore power.
14. Check for leaks and proper operation.

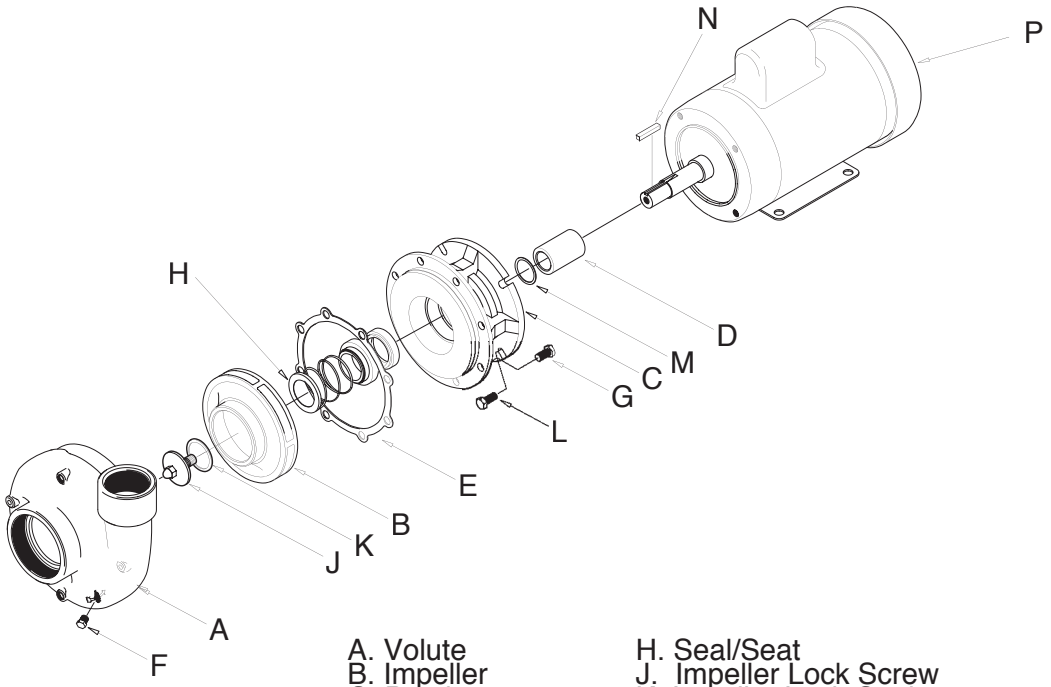

A. Volute
B. Impeller
C. Bracket
D. Shaft Sleeve
E. Volute Gasket
F. Pipe Plug
G. Volute Bolts
H. Seal/Seat
J. Impeller Lock Screw
K. Impeller Lock Gasket
L. Motor Bolts
M. Sleeve Gasket
N. Impeller Shaft Key
P. Motor

Figure 20
Price Pump Assembly

COMPONENT REPLACEMENT (CONT.)

Door Safety Switch and Magnet

This pot and pan washer utilizes a magnetic reed door safety switch mounted on the right hand side of the base below the front door and to the left hand side of the side doors. A door magnet operates the safety switch when the door is fully closed. The dishwasher will not operate if the door is open when the power pushbutton is pushed ON to fill the machine. If the machine is in the cycle, opening the door will pause the cycle. When the door is closed, the cycle will resume where it left off.

To replace door safety switch:

1. Flip the power switch to OFF.
2. Turn off main incoming power.
3. Remove the panel from the area where the switch is located.
4. Remove the panel from the control cabinet side.
5. Remove the switch cover.
6. Remove the two 6-32 grip nuts holding the switch.
7. Replace the switch.
8. Connect the wires to the cabinet as per schematic.
9. Reassemble in reverse order.
10. Restore power.

CAUTION:
Do not overtigthen the safety switch retaining nuts. Overtightening can damage the switch.

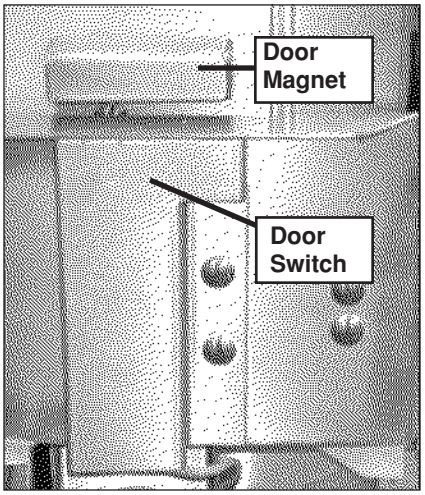

Figure 21
Door Switch and Magnet

REPLACEMENT PARTS

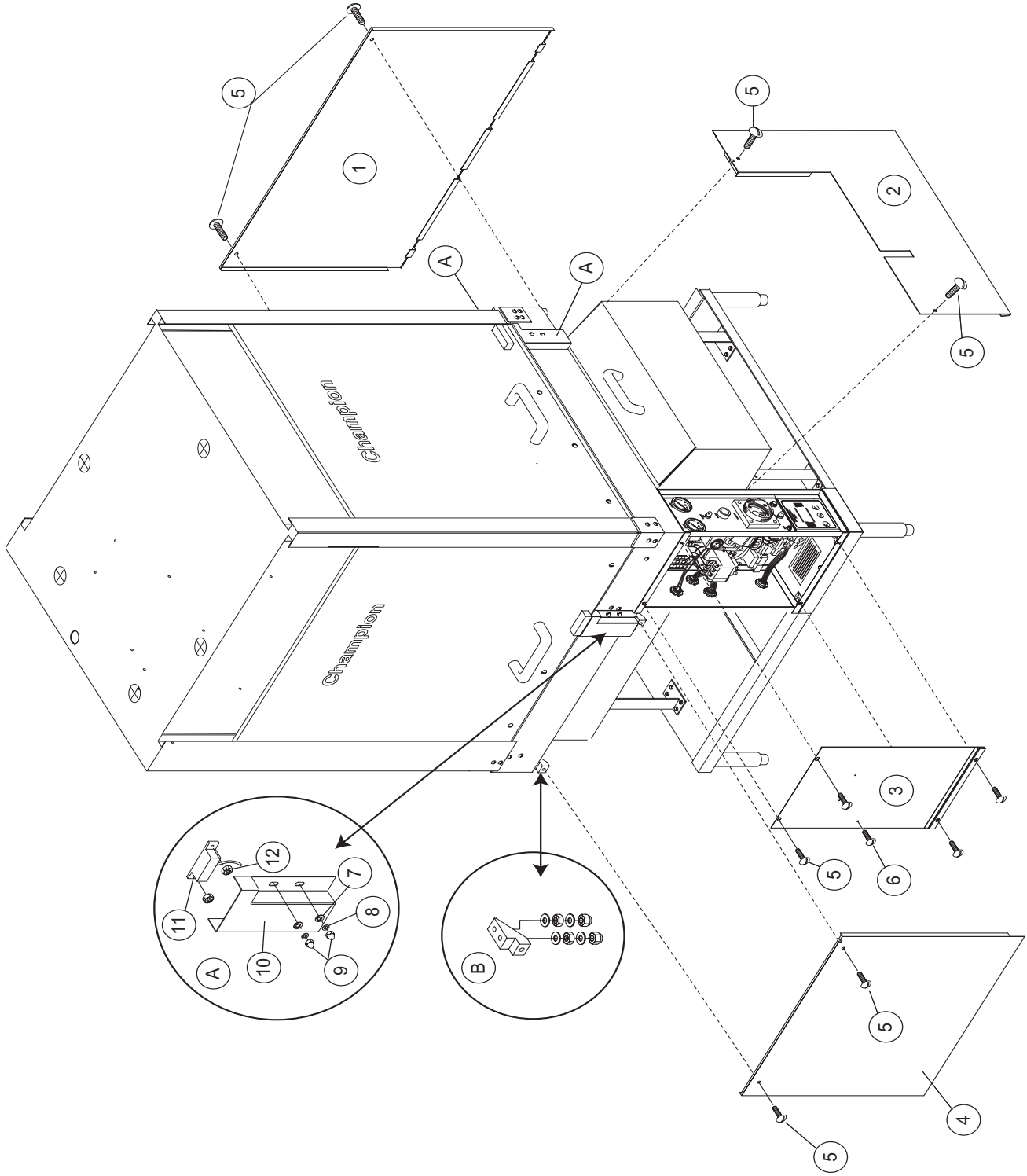

Figure 22-
Panels

PANELS

Fig. 22 Item No.	Part No.	Part Description	Qty
1	310927	Panel, RH Perimeter	1
2	310925	Panel Front Perimeter	1
	310926	Panel Front Perimeter, (Used w/Hatco Booster or Straight Through)	1
	310128	Panel ,Lower Front (Used w/Right Hand Side Mounted Booster)	1
3			
4	310929	Panel LH Perimeter	1
5	100214	Screw 1/4-20 x 3/4 Truss Head	4
6	100212	Screw 10-32 x 3/4 Truss Head	1
	A	**DOOR SWITCH & COVER (Quantities per switch)**	
7	106486	Washer Lock #10 split	2
8	107033	Washer .028 x .437 x .047	2
9	106481	Nut Acorn 10-32	2
10	314190	Cover Reed Switch	1
11	111025	Switch, Large Reed	1
12	108954	Nut, Grip 6/32 w/Nylon Insert	2
	B	**PANEL BRACKETS (Quantities per bracket)**	
	108578	Bracket, Perimeter Panel	1
	106026	Washer 1/4 x 5/8 x 1/16 SST	4
	100003	Nut, Plain 1/4-20 SST	2
	107967	Grip Nut 1/4-20 w/Nylon Insert	2

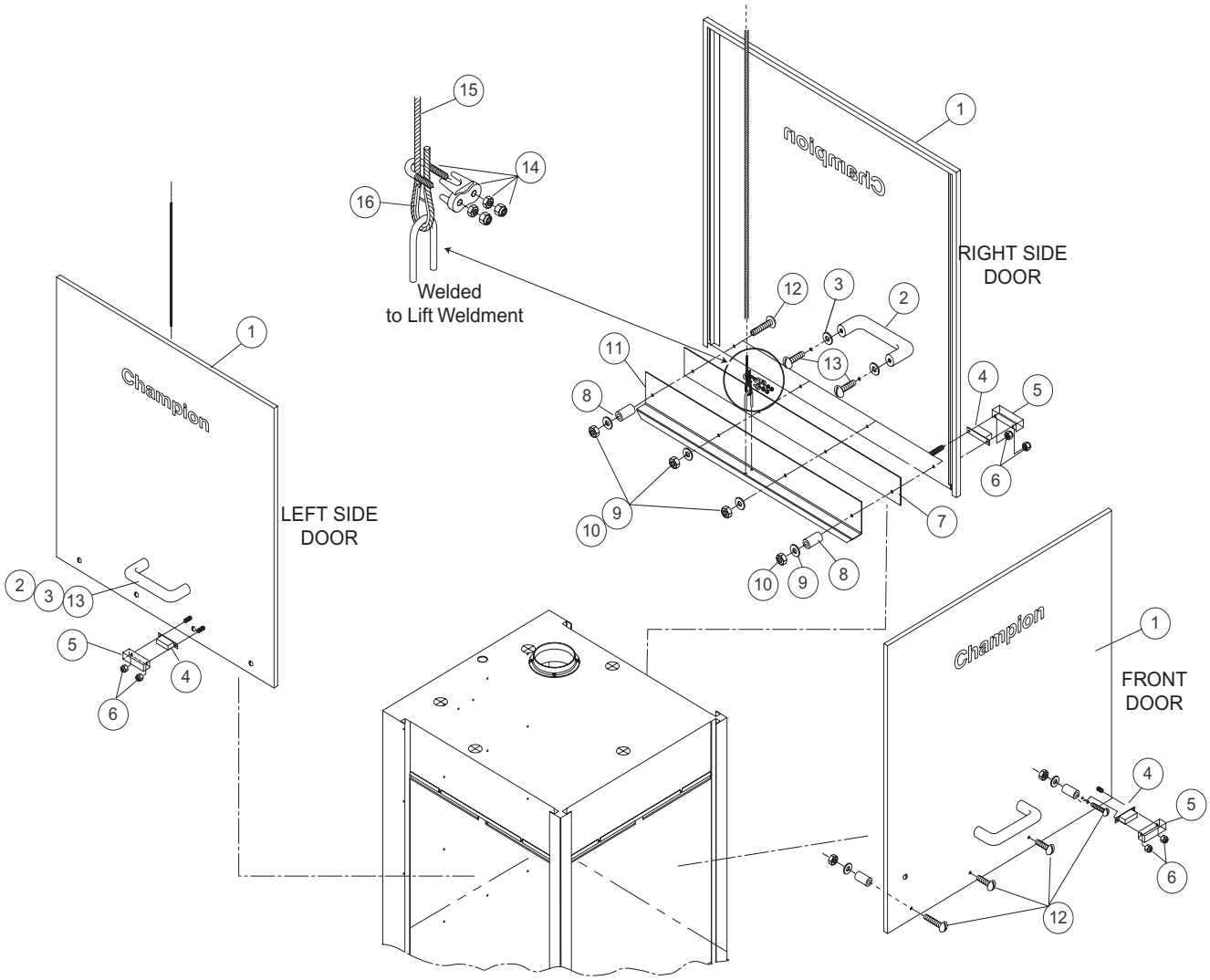

Figure 23-
Door Assemblies

DOOR ASSEMBLIES

Fig. 23 Item No.	Part No.	Part Description	Qty
1	307913	Door Assembly	3
2	108966	Door Handle	3
3	108022	Washer 8mm Plastic	6
4	111026	Magnet SS	3
5	314187	Cover Magnet	3
6	108954	Nut Grip 6-32 w/Nylon Insert	6
7	308133	Door Catch Assy	3
8	105198	Spacer 1/2 x 9/32 x 3/4LG	6
9	106026	Washer 1/4 x 5/8 x 1/16 SST	12
10	107967	Nut Grip 1/4-20 w/Nylon Insert	12
11	307910	U-Hook Lift Weld	2
12	105286	Screw 1/4-20 X 1" Truss Head	8
13	100073	Screw 1/4-20 x 1/2" Truss Head	6
14	109674	Clip, Wire Rope	3
15	202996	Cable 68" Counterweight (Straight Through)	A/R
	204231	Cable 83" Counterweight (Front Feed & Corner)	A/R
16	109673	Thimble, Wire Rope	3

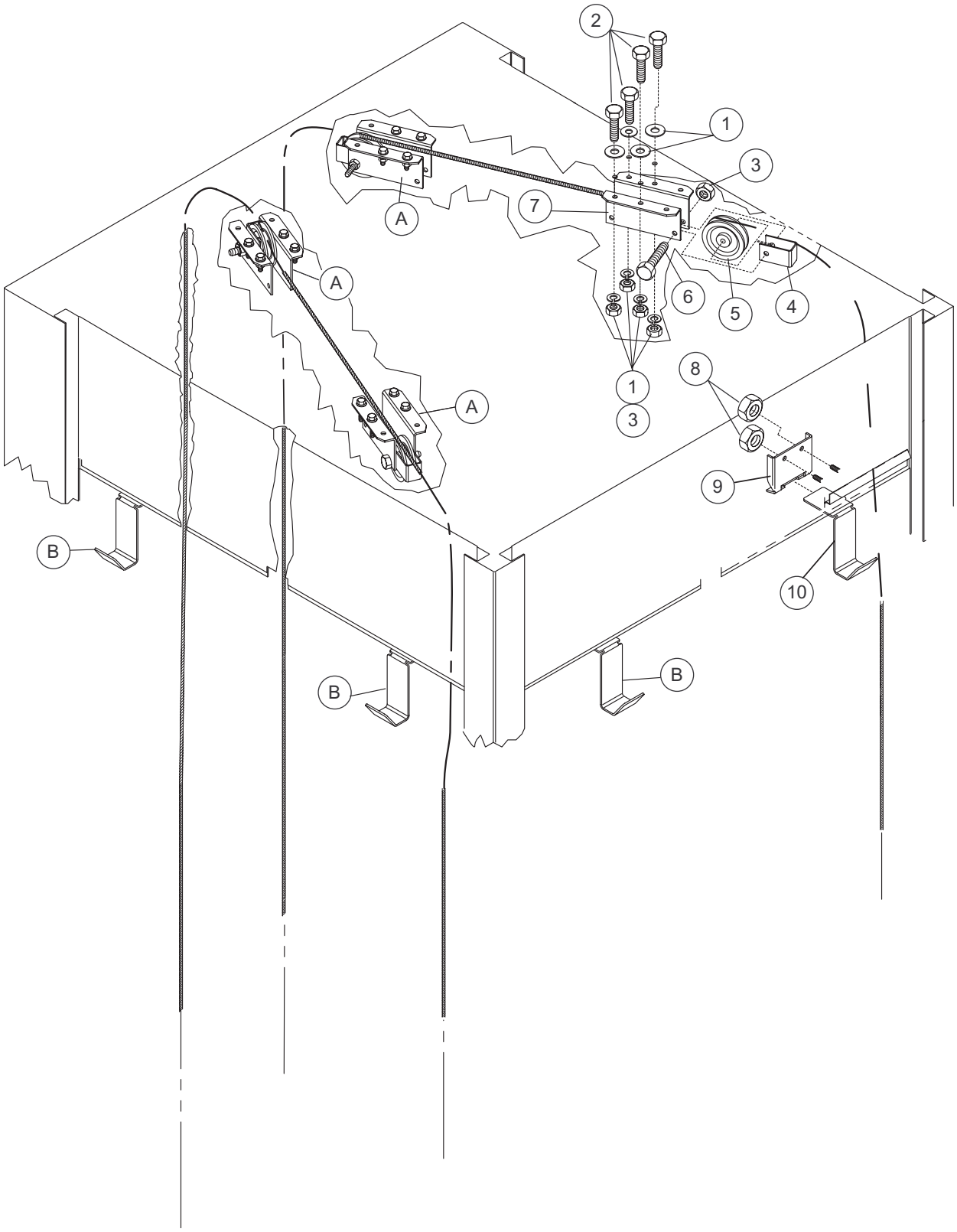

Figure 24
Cable Pulley Assembly

CABLE PULLEY ASSEMBLY

Fig. 24 Item No.	Part No.	Part Description	Qty
	A	**CABLE PULLEYS (Quantities per Pulley)**	
1	102376	Washer 5/16 x 3/4 x 1/16	4
2	100739	Bolt 5/16-18 x 3/4 Hex Head	4
3	100142	Nut Grip 5/16-18	5
4	109697	Sleeve Pulley	1
5	109696	Wheel Pulley	1
6	104002	Bolt 5/16-18 x 1-1/2"	1
7	313538	Bracket, Pulley	2
	B	**DOOR CATCH ASSEMBLY (Quantities per Catch)**	
8	100141	Nut, Grip 1/4-20 SST	2
9	317345	Bracket Door Catch	1
10	317344	Hook, Door Catch	1
11	202949	Rod, Door Catch (Not Shown)	1
12	308133	Door Catch Weld (Not Shown)	1

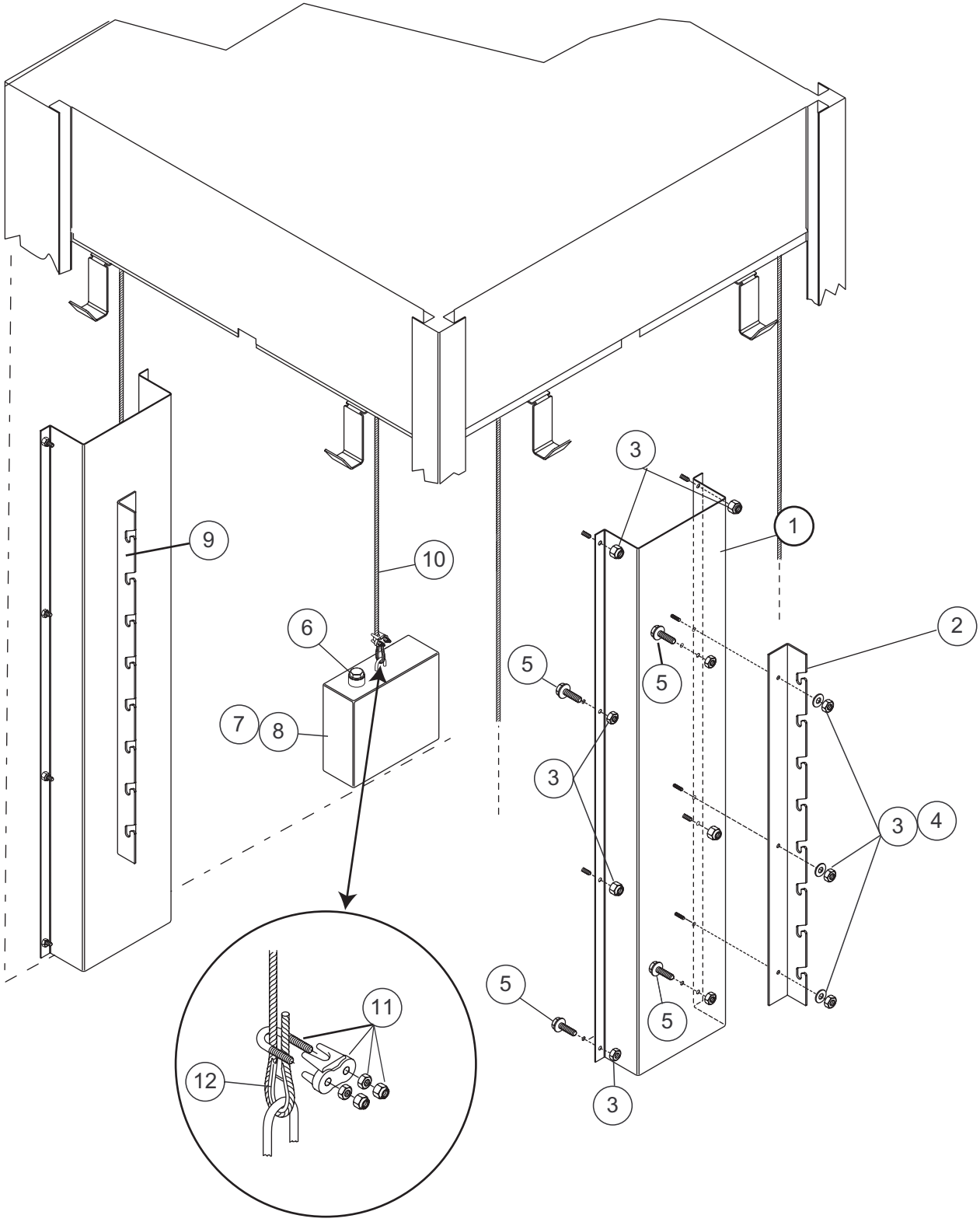

Figure 25 -
Counterweight System

COUNTERWEIGHT SYSTEM

Fig. 25 Item No.	Part No.	Part Description	Qty
1	313537	Cover Counterweight	2
2	308489	Stabilizer-Hold Down Grid RH	1
3	106026	Washer 1/4 x 5/8 1/16 SST	6
4	100141	Nut Grip 1/4-10 SST	22
5	112318	Screw 1/4-20 x 1/2" Hex Washer Head	16
6	108418	Plug 1/2" Plastic	2
7	309664	Door Counterweight	2
8	105394	Lead Shot #9 Chilled (Included in 309664)	20Lbs
9	308488	Stabilizer-Hold Down Grid LH	1
10	202996	Cable 68" Counterweight (Straight)	A/R
	204231	Cable 83" Counterweight (Front Feed & Corner)	A/R
11	109674	Clip, Wire Rope	2
12	109673	Thimble, Wire Rope	2

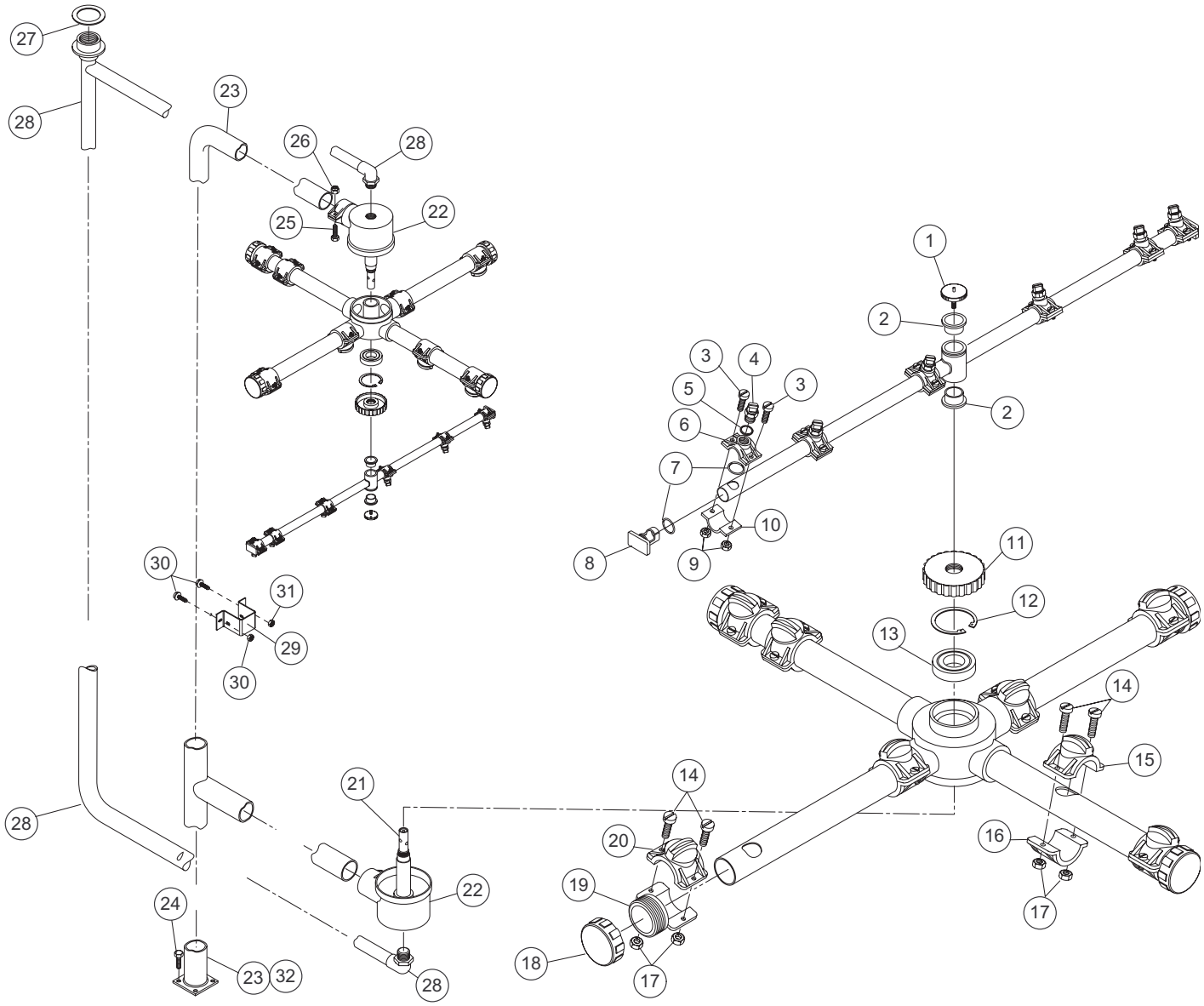

Figure 26-
Wash & Rinse Assemblies

WASH & RINSE ASSEMBLIES

Fig. 26 Item No.	Part No.	Part Description	Qty
1	109837	Retaining Screw	1
2	110679	Bearing, Rinse Arm	2
3	107336	Screw M4 x 12mm Pan Head	12
4	109500	Nozzle 1/8 NPT	6
5	106407	Washer Lock 3/8 Split	6
6	110193	Nozzle top Rinse Arm	6
7	108021	O-ring	8
8	107328	Plug Wash Arm	2
9	107337	Nut Plain M4	12
10	107332	Nozzle Bottom	6
11	109333	Threaded Ring NS	1
12	109685	Retainer Ring	1
13	109684	Bearing PP28 Wash Arm	1
14	108442	Bolt M5 x 15mm Filister Head	16
15	109503	Nozzle NS PPW	4
16	108444	Nozzle Bottom	4
17	108441	Nut Hex M5	16
18	108447	Cap 1-1/4 Plastic	4
19	108445	Cap Adapter	4
20	108446	Nozzle Top	4
21	109332	Spindle Wash Arm	2
22	109331	Wash Arm Support	2
23	109312	Standpipe Weld	1
24	100740	Bolt 5/16-18 x 1" Hex Head	4
25	100738	Bolt 1/40-20 x 1" Hex Head	2
26	107967	Nut Grip 1/4-20 w/Nylon Insert	2
27	109303	Gasket 1-5/16 ID x 3/4OD x 1/8TK	1
28	109299	Final Rinse Pipe Weld	1
29	313212	Bracket Standpipe	1
30	112318	Screw 1/4-20 x 1/2 Hex Washer Head	2
31	100141	Nut Grip 1/4-20 SST	2
32	109304	Gasket 3"SQ 15/16ID x 1/8TK	1
---	405902	Rinse Arm Assy PP28 W/Bearings (Includes items 2-10)	
---	900786	Kit*Nozzle PP28 Rinse Complete (Includes items 3-7, 9-10)(Makes up one complete nozzle assembly)	
---	405903	Wash Arm Assy PP28 w/Bearings (includes items 12-20)	
---	900743	Kit*Wash Arm Rebuild PP28 (Includes items 12-20)(Complete rebuild of arm components only, does not include spray pipe)	

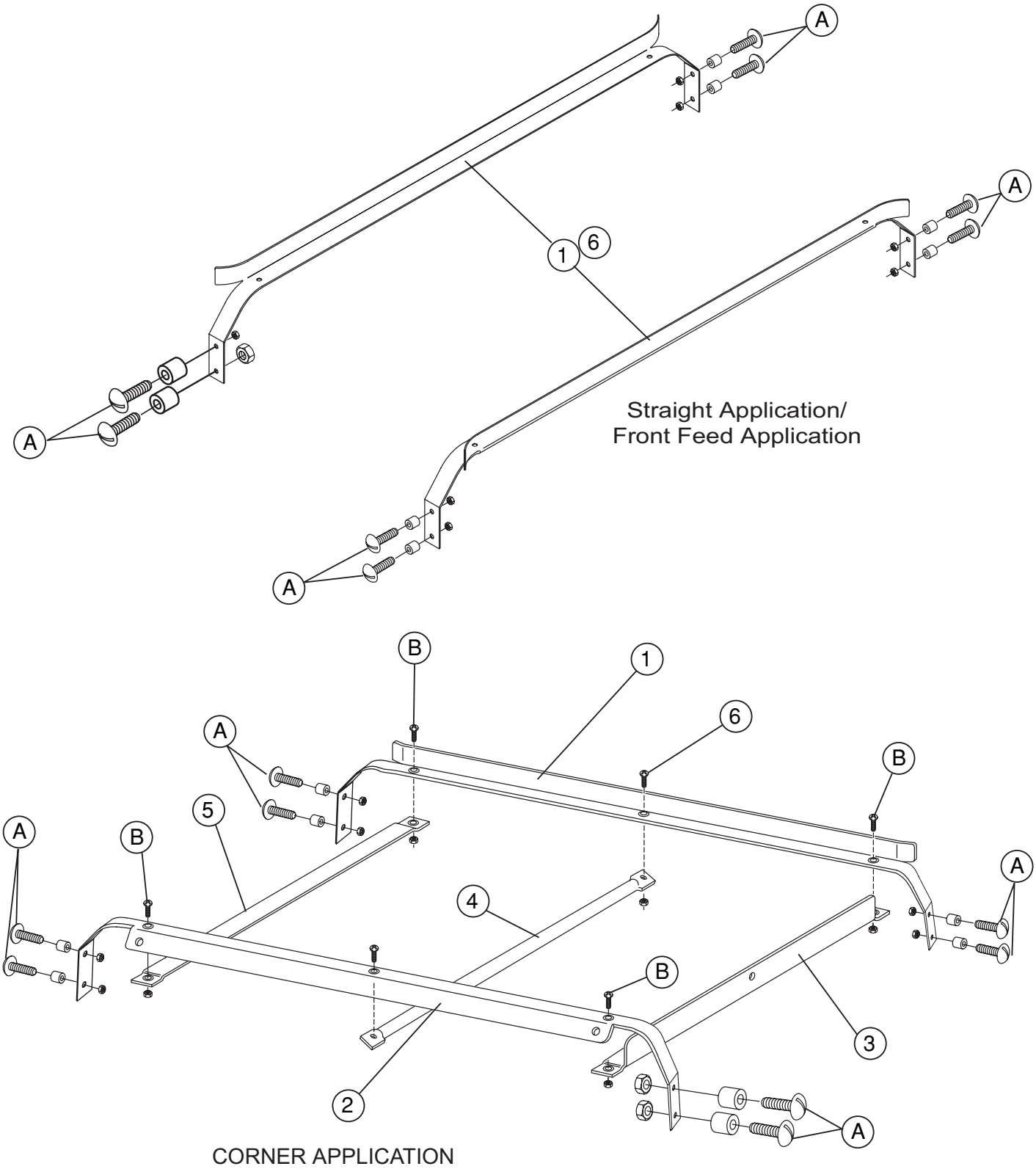

Figure 27
Track Assembly

TANK COMPONENTS
(ELECTRIC HEAT)

Fig. 27 Item No.	Part No.	Part Description	Qty
1	307348	Track PP-28 (Straight)	2
1	307348	Track PP-28 (Corner-Rear Track)	1
2	309638	Track PP-28 (Corner-Front Track)	1
3	309621	Track PP-28 (Corner-Back track)	1
4	309620	Support Rack, Track PP28C	1
5	310064	Support Track-Rack, PP28C	1
6	312670	Track, PP-28FF (Front Feed)	2
A	**TRACK ASSEMBLY HARDWARE** (Quantities per Track)		
	105286	Screw 1/4 - 20 x 1" Truss Head	4
	105299	Spacer 1/2"	4
	100141	Nut, Grip 1/4-20 SST	4
B	**TRACK/SUPPORT HARDWARE** (Quantities per Support/Track)		
	105286	Screw 1/4 - 20 x 1" Truss Head	
	105299	Spacer 1/2"	4
	100141	Nut, Grip 1/4-20 SST	4

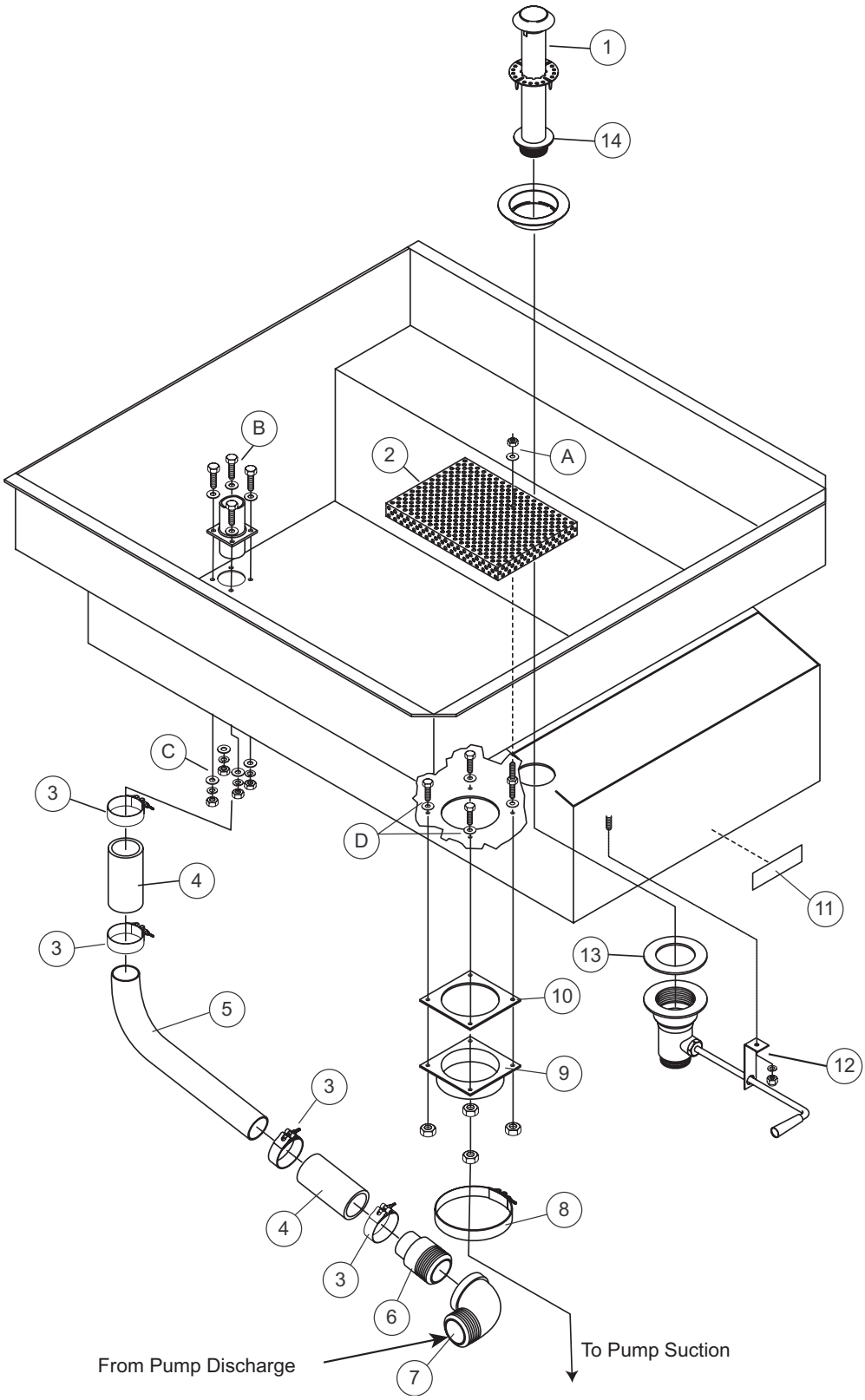

Figure 28-
Drain System

DRAIN SYSTEM

Fig. 28 Item No.	Part No.	Part Description	Qty
1	314185	Drain Assy, Twist Type	1
2	313951	Strainer Suction	1
3	111780	Hose Clamp Discharge	4
4	202241	Hose 1-7/8" x 4"	2
5	205233	Discharge Pipe	1
6	317857	Hose Adapter Weldment	1
7	106488	Elbow Street 2" x 90˚ BI	1
8	109702	Hose Clamp Suction	1
9	307884	Suction Flange Weld	1
10	109513	Gasket Pump Suction	1
11	112269	Nameplate Drain	1
12	314185	Drain Assy Wash Twist Type	1
13	111606	Drain Klein Gasket	1
14	111607	O-ring Drain Klein	1
	A	**SUCTION SCREEN HARDWARE**	
	100141	Nut Grip 1/4-20 SST	1
	106026	Washer 1/4 x 5/8 x 1/16 SST	1
	B	**STANDPIPE HARDWARE**	
	100740	Bolt 5/16-18 x 1" Hex Head	4
	102376	Washer 5-16 x 3/4 x 1/16 (Bottom)	8
	106013	Washer Lock 5/16 Split (Top)	4
	100154	Nut Plain 5/16-18	4
	C	**SUCTION HARDWARE**	
	100739	Bolt 5/16-18 x 3/4 Hex Head SST	4
	102376	Washer 5/16 x 3/4 x 1/16	4
	100142	Nut Grip 5/16-18	4

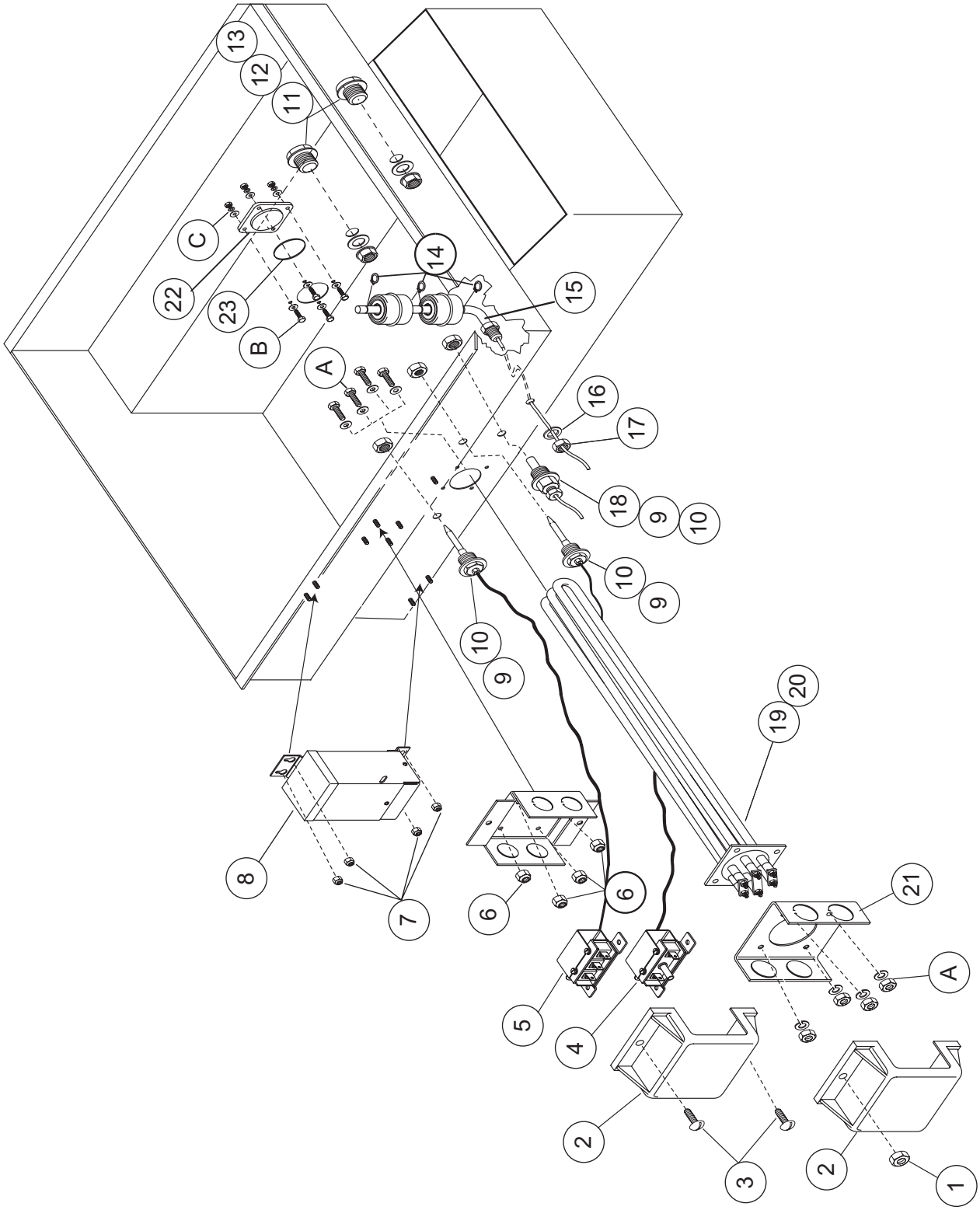

Figure 29-
Wash Tank Components
(Electric Heat)

TANK COMPONENTS
(ELECTRIC HEAT)

Fig. 29 Item No.	Part No.	Part Description	Qty
1	107966	Nut Grip 10-32 w/Nylon Insert	2
2	109682	Cover (Box) Moplenx	1
3	100212	Screw 10-32 x 3/4 Truss Head	2
4	110561	Thermostat, Hi-Limit	1
5	109069	Thermostat w/Capillary	1
6	107966	Nut Grip 10-32 w/Nylon Insert	4
7	107967	Nut Grip 1/4-20 w/Nylon Insert	4
8	100280	Transformer 250V 240/480:120/240	1
9	201041	Washer 7/8 x 1-3/16 x 1/8	3
10	100547	Locknut 1/2NPT SST Forged	3
11	108417	Nut 1/2" Plastic	2
12	109034	Washer 13/16 x 1-3/16 Fiber	2
13	108418	Plug 1/2" Plastic	2
14	111151	C-Clip Float Switch (Included in item 15)	A/R
15	111019	Dual Float Switch	1
16	107589	Washer Lock 1/2" External	1
17	104584	Nut Plain 1/2-13 Hex SST	1
---	110750	Float Switch Gasket (Not Shown)	1
18	108391	Thermometer 4'	1
19	108345	Gasket 3 x 3 x 1/8"	1
20	109751	Heater 10kW (208-220V, 380V)	1
	107844	Heater 10kW (230-240V)	1
	107846	Heater 10kW (460-480V)	1
	111120	Heater 10kW (575V)	1
21	308949	Box Electric Stamped Flange	1
22	109683	Flange Plastic	1
23	112257	O-Ring	1
	A	**HEATER ELEMENT HARDWARE**	
	100154	Nut Plain 5/16-18	4
	106013	Washer Lock 5/16 Split	4
	100740	Bolt 5/16-18 x 1" Hex Head	4
	102376	Washer Flat 5/16-18	4
	B	**BLOCK FLANGE HARDWARE**	
	100740	Bolt 5/16-18 x 1" Hex Head	4
	102376	Washer 5/16 x 3/4 x 1/16	8
	100154	Nut Plain 5/16-18	4
	106013	Washer Lock 5/16 Split	4

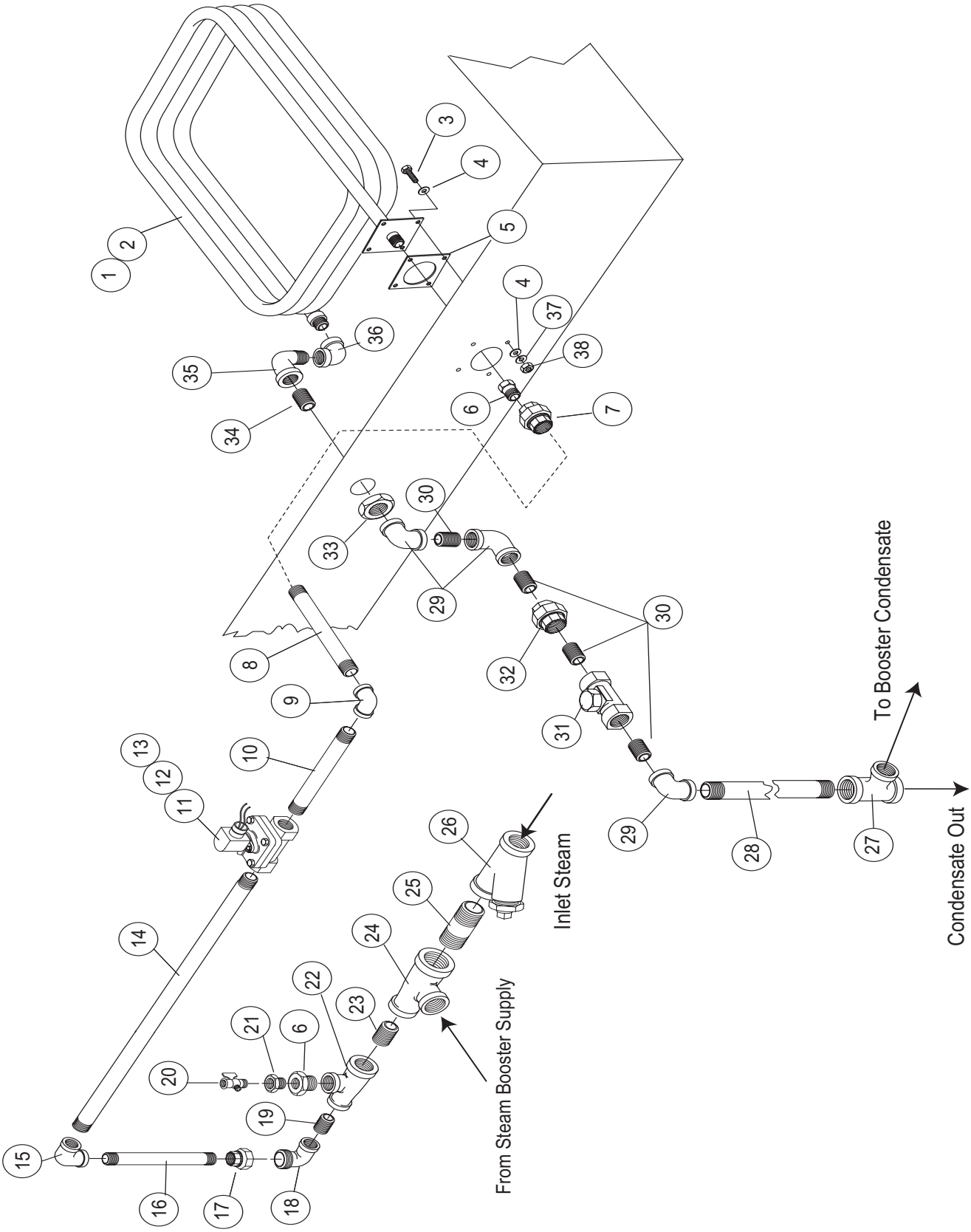

Figure 30-
Steam Coil Tank Heat

STEAM COIL
TANK HEAT

Fig. 30 Item No.	Part No.	Part Description	Qty
1	305137	Steam Coil LH	1
2	305137	Steam Coil RH	1
3	100740	Bolt 5/16-18 x 1" Hex Head	4
4	102376	Washer 5/26 x 3/4 x 1/16	8
5	112257	Oring	1
6	103465	Bushing Red 3/4" x 1/2" BI	2
7	102554	Union 3/4" NPT SST	1
8	XXXXX	Nipple (Call Factory to Confirm Application)	A/R
9	XXXXX	Elbow Street (Call Factory to Confirm Application)	A/R
10	XXXXX	Nipple (Call Factory to Confirm Application)	A/R
11	109887	Valve, 3/4" Steam	1
12	109903	Kit Repair 3/4" Steam-Water	A/R
13	108516	Coil, Valve	A/R
14	111495	Nipple 3/4" x 6-1/4" BI	1
15	105730	Elbow 3/4" x 90 BI	1
16	111490	Nipple 3/4" x 7-1/4" BI	1
17	105779	Union 3/4" NPT BI	1
18	106485	Union Elbow 3/4" x 90 Female BI	1
19	105803	Nipple Close 3/4"NPT BI	1
20	100123	Cock Gauge 1/4"	1
21	102402	Bush Red 1/2" x 1/4" BI	1
22	105765	Tee 1" x 3/4" x 3/4" BI	1
23	105847	Nipple Close 1" BI	1
24	105773	Tee Red 1-1/4" x 1" x 1" BI	1
25	105875	Nipple Close 1-1/4" x 3" BI	1
26	100263	Strainer Line 1-1/4" BI w/Plug	1
27	105757	Tee Red 3/4" x 1/2" x 1/2" BI	1
28	105796	Nipple 1/2" x 7" BI	1
29	102288	Elbow 1/2" x 90 BI	1
30	105782	Nipple Close 1/2" BI	4
31	111380	Trap Steam 1/2"	1
32	105778	Union 1/2" NPT BI	1
33	100547	Locknut 1/2NPT SST	1
34	100705	Nipple Rtoe 1/2" x 2" SST	1
35	100516	Elbow Street 1/2" x 90 SST	1
36	102436	Elbow 1/2" x 90 SST	1
37	106013	Washer Lock 5/16 Split	4
38	100154	Nut Plain 5/16-18	4

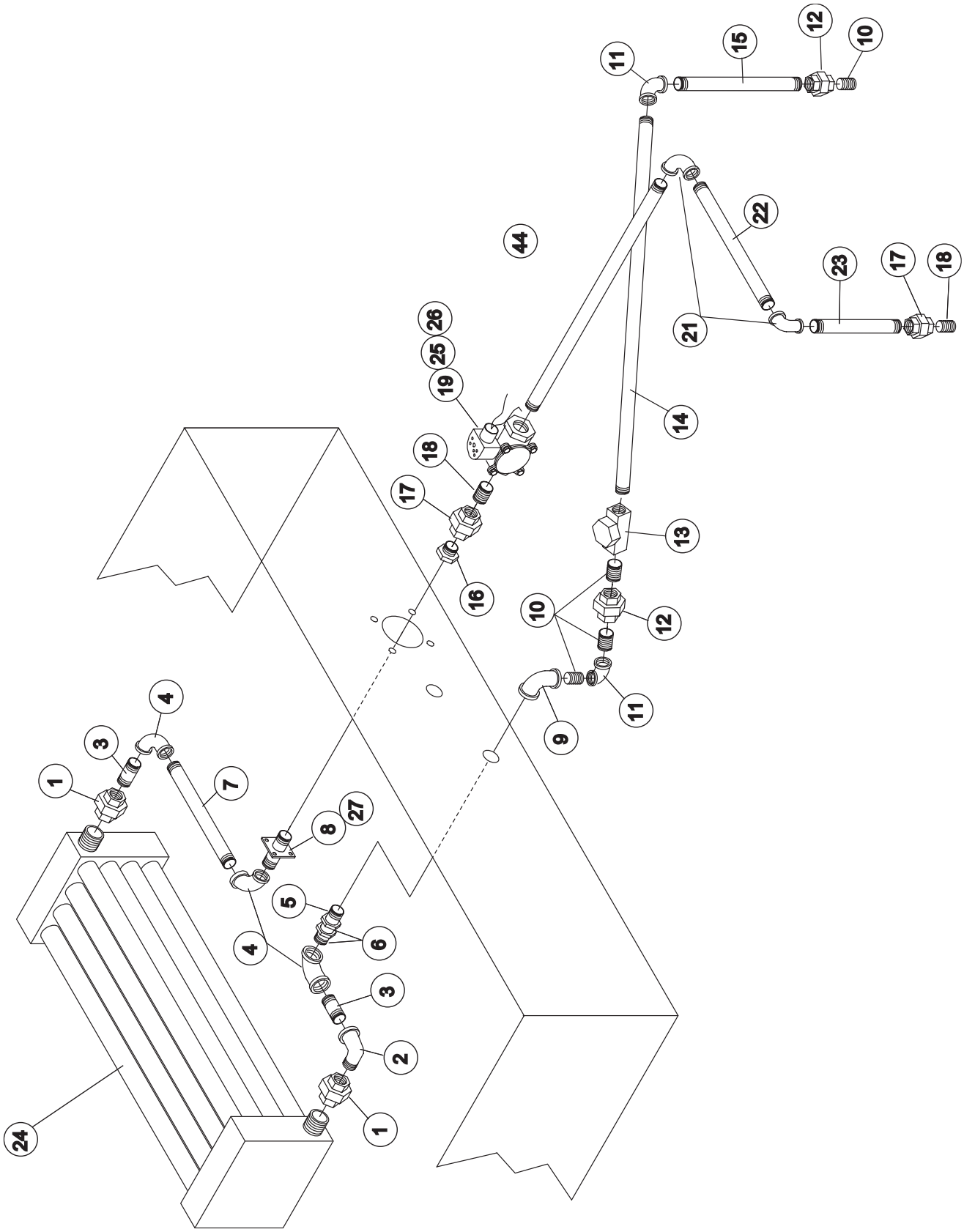

Figure 31-
Steam Coil (Low Pressure)
Tank Heat

STEAM COIL (LOW PRESSURE)
TANK HEAT

Fig. 31 Item No.	Part No.	Part Description	Qty
1	102554	Union 3/4" NPT SST	2
2	100023	Elbow, Street /34" NPT x 90˚ SST	1
3	106937	Nipple Rtoe 3/4" x 1-3/4" SST Full	2
4	102443	Elbow 3/4 x 90 SST	3
5	103325	Nipple Rtoe 3/4" x 2-1/2" SST	1
6	100548	Locknut 3/4" NPT SST	2
7	101517	Nipple 3/4" x 7" SST	1
8	307404	Flange, Weldment	1
9	105738	Elbow Red 3/4" x 90˚ BI	1
10	105782	Nipple Close 1/2" BI	4
11	102288	Elbow 1/2" x 90˚ BI	2
12	105778	Union 1/2" NPT BI	2
13	111380	Trap Steam 1/2"	1
14	112322	Nipple 1/2" x 23" BI	1
15	105796	Nipple 1/2" x 7" BI	1
16	105705	Bush Red 1" x 3/4" BI	1
17	105780	Union 1" NPT BI	2
18	105847	Nipple Close 1" NPT BI	2
19	110005	Valve, 1" Steam	1
20	112742	Nipple 1" NPT x 18-1/2" BI	1
21	105733	Elbow 1" x 90˚ BI	2
22	111278	Nipple 1" x 14-1/2" BI	1
23	105858	Nipple 1" x 5"	1
24	D5980-1	Steam Coil	1
25	110007	Kit Repair 1" Steam	A/R
26	110120	Coil, Valve	A/R

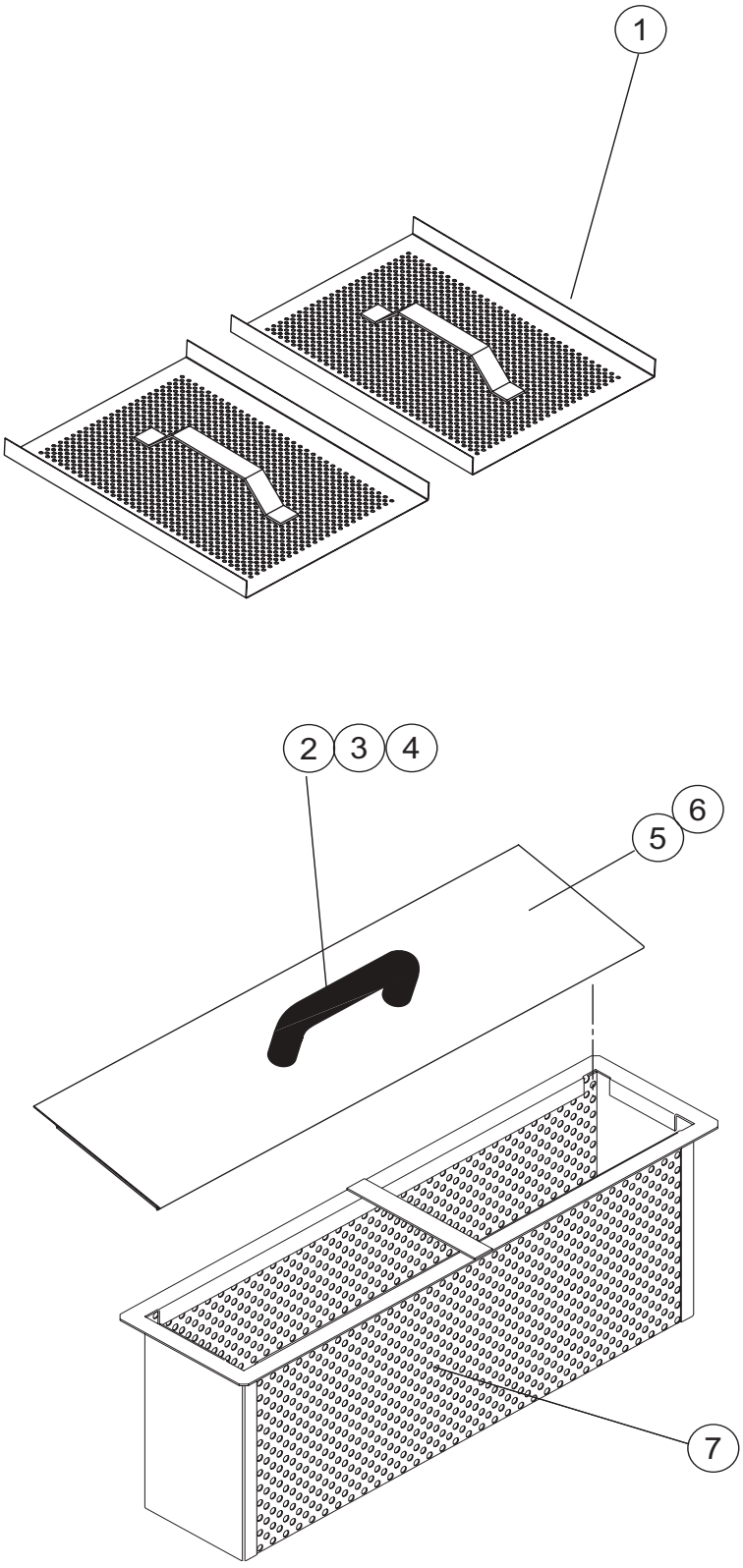

Figure 32-
Scrap Screens & Baskets

SCRAP SCREENS & BASKETS

Fig. 32 Item No.	Part No.	Part Description	Qty
1	307360	Screen Weldment	6
2	108966	Handle Door	1
3	100779	Screw1/4-20 x 5/8 Truss Head (Not Shown)	2
4	106482	Washer Lock 1/4" Split (Not Shown)	2
5	308480	Weight Bucket Lid	1
6	311378	Cover Weld Basket	1
7	316275	Basket Weldment (Corner & Front Feed)	1
	312652	Basket Weldment	1

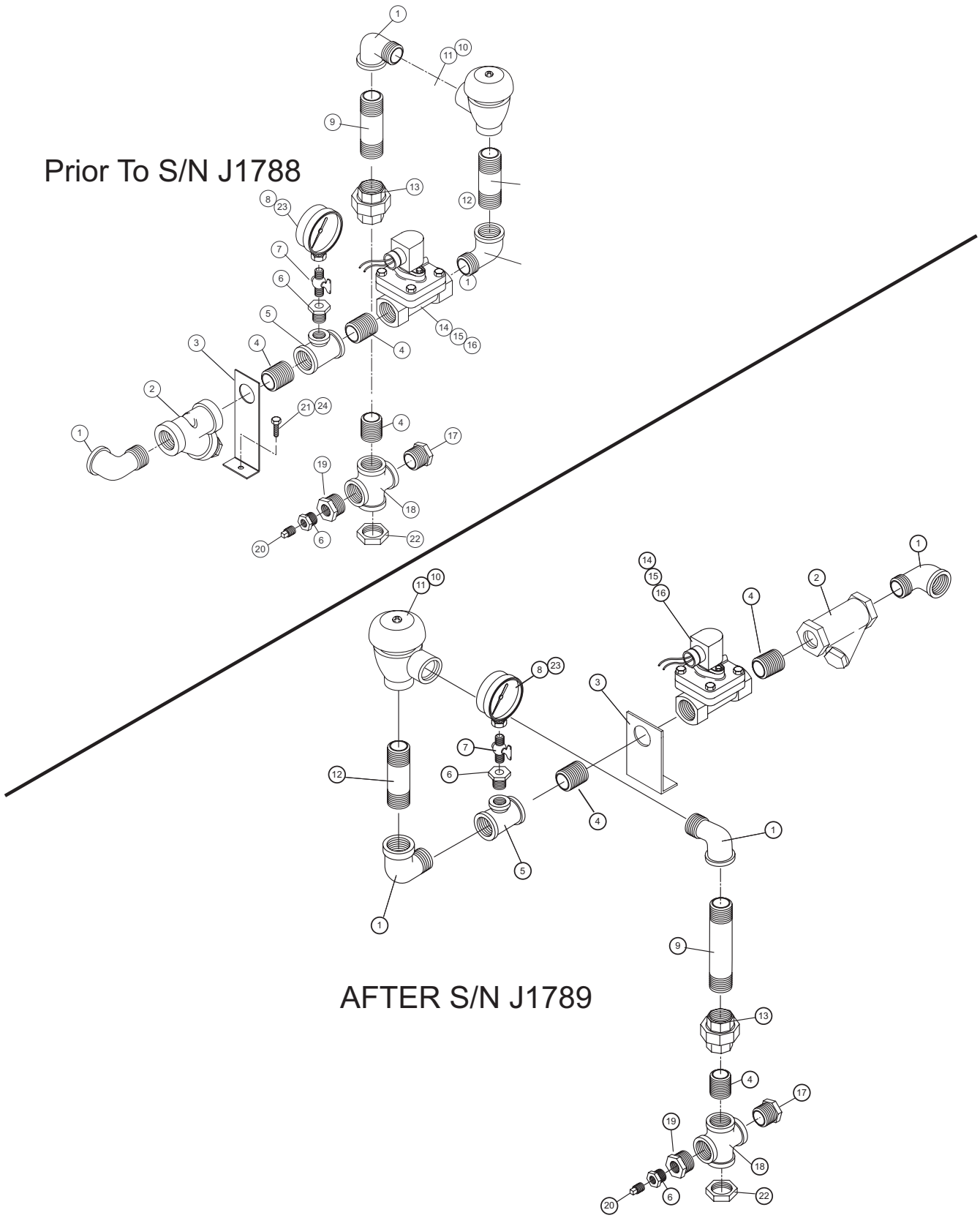

Figure 33-
Piping without Booster

PIPING WITHOUT BOOSTER

Fig. 33 Item No.	Part No.	Part Description	Qty
1	102450	Elbow Street 1 x 90 Brass	3
2	101248	Strainer Line 1" Bronze	1
3	317740	Bracket Support Pipe	1
4	101000	Nipple Close 1NPT Brass	3
5	101026	Tee Red 1 x 1 1/2 Brass	1
6	102388	Bush Red 1/2 x 1/4 Brass	2
7	100123	Cock Gauge 1/4"	1
8	100135	Pressure Gauge 0-60	1
9	102764	Nipple 1" x 4" Brass	1
10	102556	Vacuum Breaker 1"	1
11	108352	Kit Repair 1"	A/R
12	102762	Nipple 1" x 3-1/2" Brass	1
13	102551	Union 1NPT Brass	1
14	111438	Valve 1"	1
15	108516	Coil Valve	A/R
16	109904	Kit Repair 1" Steam-Water	A/R
17	102394	Bush Red 1 x 1/2 Brass	1
18	110544	Cross 1NPT Brass	1
19	102500	Plug 1/4NPT Brass	1
20	102504	Plug 1/2NPT Brass Square Head	1
21	100734	Bolt 1/4-20 x 1/2 Hex Head SST	1
22	100585	Locknut	1
23	109765	Overlay Pressure Gauge	1
24	100141	Nut Grip 1/4-20 SST (Not Shown)	1

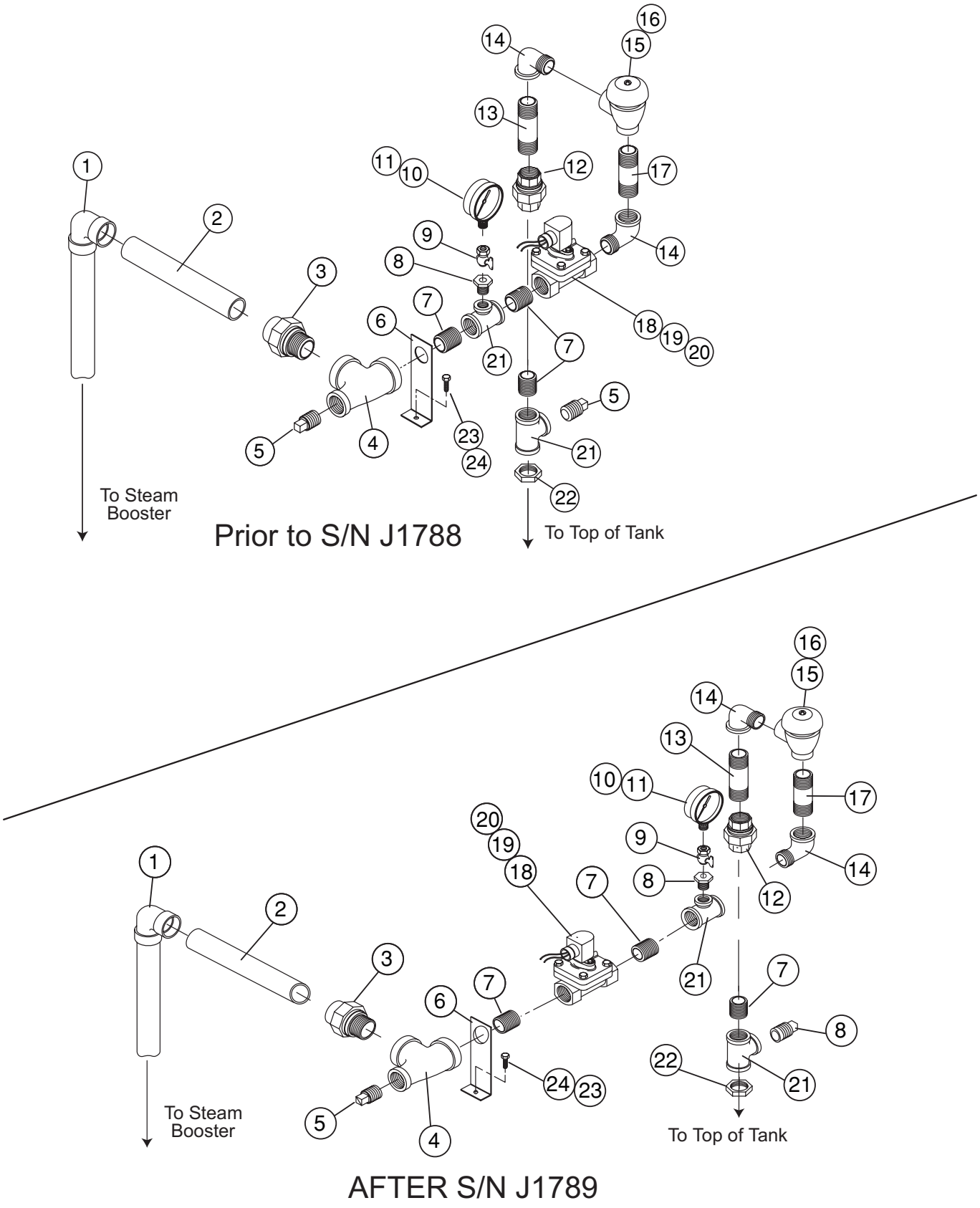

Figure 34-
Piping with Steam Booster

PIPING WITH STEAM BOOSTER

Fig. 34 Item No.	Part No.	Part Description	Qty
1	108342	Elbow 1C x 90 Copper	1
2		Nipple (Call Factory w/Length for Correct Part)	A/R
3	108296	Union 1C x 1MPT	1
4	102532	Tee Red 1 x 1/2 x 1	1
5	102504	Plug 1/2NPT Square Head	2
6	309602	Bracket Support Pipe	1
7	101000	Nipple Close 1NPT Brass	4
8	102388	Bush Red 1/2 x 1/4 Brass	1
9	100123	Cock Gauge 1/4	1
10	100135	Pressure Gauge 0-60PSI	1
11	109765	Overlay Pressure Gauge	1
12	102551	Union 1NPT Brass	1
13	102764	Nipple 1 x 4 Brass	1
14	102540	Elbow Street 1 x 90 Brass	2
15	102556	Vacuum Breaker 1"	1
16	108352	Repair Kit 1"	A/R
17	102762	Nipple 1 x 3-1/2	1
18	111438	Valve 1" HW	1
19	108516	Coil, Valve	A/R
20	109904	Kit Repair 1" Stm-Water	A/R
21	101026	Tee Red 1 x 1 x 1/2 Brass	2
22	100585	Locknut	1
23	100734	Bolt 1/4-20 x 1/2 Hex Head SST	1
24	100141	Nut Grip 1/4-20 SST (Not Shown)	1

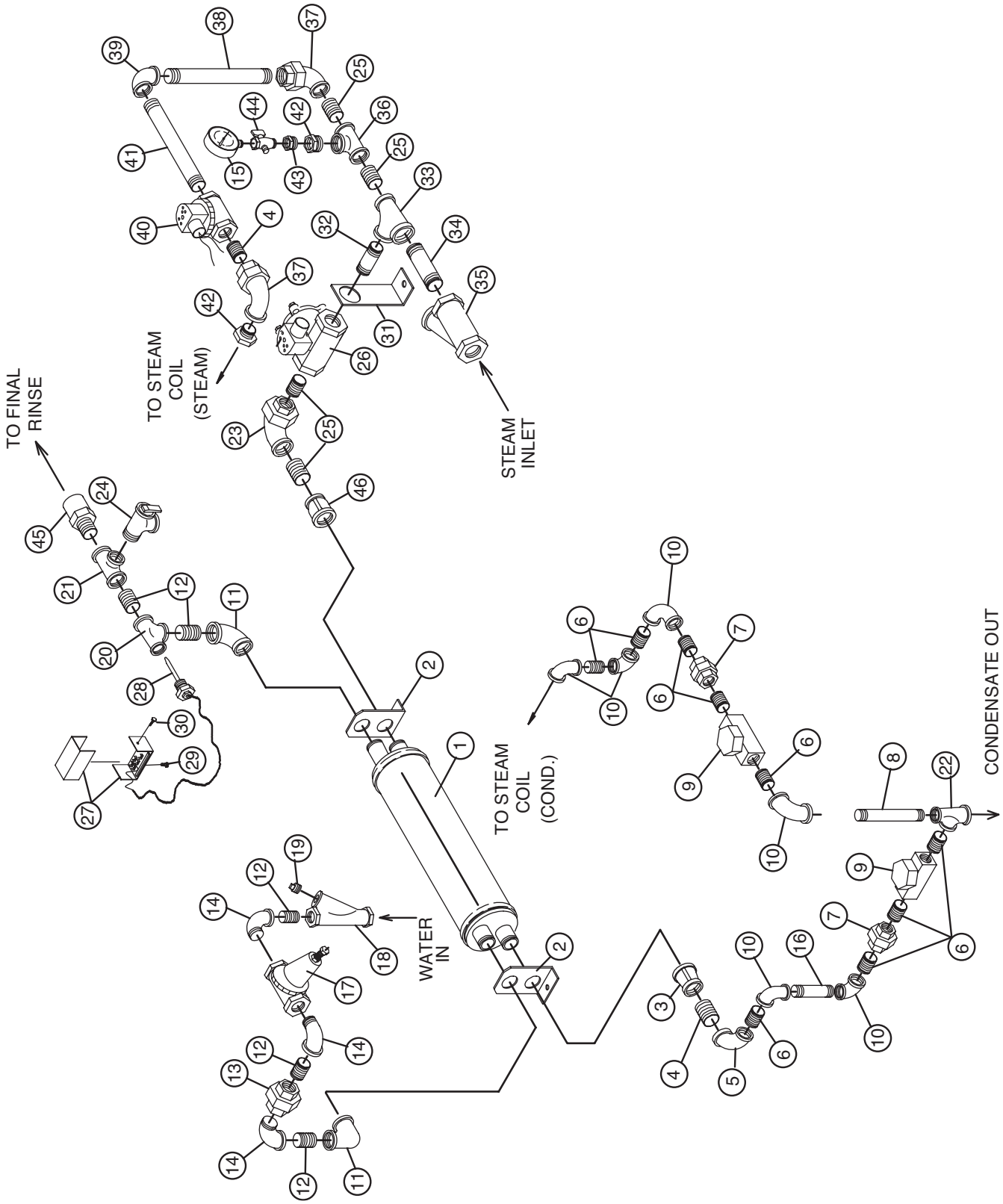

Figure 35-
Steam Booster
(Mounted under Tank)

STEAM BOOSTER
(MOUNTED UNDER TANK)

Fig. 35 Item No.	Part No.	Part Description	Qty
1	110189	Booster K2 Spirec	1
2	315596	Bracket Booster Support	2
3	105725	Coupling, Reducing 1 x 3/4 BI	1
4	105803	Nipple Close 3/4NPT BI	3
5	105738	Elbow Reducing 3/4 x 1/2 x 90˚ BI	1
6	105782	Nipple Close 1/2NPT BI	9
7	105778	Union 1/2"NPT	2
8	105796	Nipple 1/2 x 27 BI	1
9	111380	Trap Steam 1/2"	2
10	102288	Elbow 1/2 x 90˚ BI	6
11	102451	Elbow Red 1 x 3/4 x 90˚	2
12	101000	Nipple Close 1"NPT Brass	5
13	102551	Union 1"NPT Brass	1
14	102450	Elbow Street 1 x 90 Brass	1
15	100135	Pressure Gauge 0-60 PSI	1
16	105785	Nipple 1/2 x 2-1/2 BI	1
17	10029	Valve Pressure Reducing 1"	1
18	101248	Strainer Line 1" Bronze	1
19	102505	Plug 3/4"NPT Brass	1
20	102532	Tee Reducing 1 x 1/2 x 1 Brass	1
21	102535	Tee Reducing 1 x 1 x 3/4 Brass	1
22	105757	Tee Reducing 3/4 x 1/2 x 1/2 BI	1
23	107211	Union Elbow 1 x 90 Female BI	1
24	104649	Valve Relief 3/4"	1
25	105847	Nipple Close 1"NPT BI	3
26	110005	Valve 1" Asco	1
---	110007	Kit Repair 1" Asco	A/R
---	110120	Coil, Asco 120V	A/R
27	107922	Thermostat Base & Cover	1
28	109069	Thermostat w/Capillary	1
29	100100	Screw 8-32 x 1/4 Round Head	2
30	106460	Screw 6-32 x 1/4 Truss Head	1
31	309498	Bracket Support Steam	1
32	105850	Nipple 1/2 x 2" BI	1
33	105773	Tee Reducing 1-1/4 x 1 x 1 BI	1
34	105875	Nipple 1/2 x 2-1/2" BI	1
35	100263	Strainer Line 1-1/4" BI	1
36	105765	Tee Reducing 1 x 3/4 x 3/4 BI	1
37	106485	Union Elbow 3/4 x 90 Female BI	2
38	111490	Nipple 3/4 x 7-1/4 BI	1
39	105730	Elbow 3/4 x 90 BI	1
40	109887	Valve 3/4" Steam	1
---	109903	Kit Repair 3/4" Stm-Water	A/R
---	108516	Coil, Valve	A/R
41	111495	Nipple 3/4 x 6-1/4 BI	1
42	103465	Bushing, Red 3/4 x 1/2 BI	2
43	102402	Bushing Reducing 1/2 x 1/4 BI	1
44	100123	Cock Gauge 1/4"	1
45	108296	Union 1C x 1MPT	1
46	100204	Coupling 1NPT BI	1

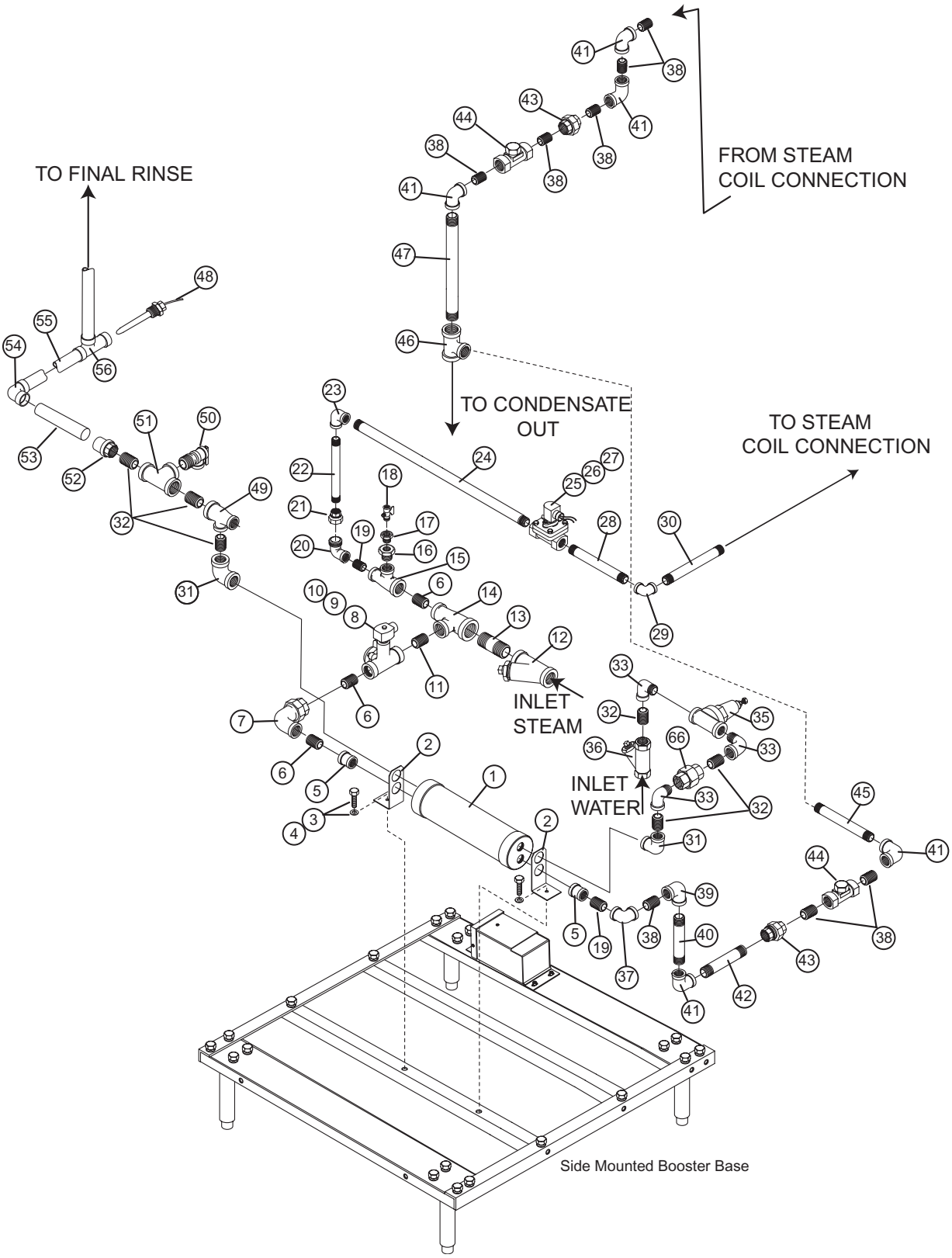

Figure 36-
Side Mounted Steam Booster
(Left Hand Mounted Shown)

STEAM BOOSTER
(SIDE MOUNTED)

Fig. 36 Item No.	Part No.	Part Description	Qty
1	110189	Booster K2 Spirec	1
2	315596	Bracket Booster Support	2
3	100734	Bolt 1/4-20 x 1/2 Hex Head	2
4	106026	Washer, Flat /14"	2
5	100204	Coupling 1"NPT BI	1
6	105847	Nipple Close 1"NPT BI	3
7	107211	Union Elbow 1 x 90 Female BI	1
8	110005	Valve 1" Asco	1
9	110007	Kit Repair 1" Asco	A/R
10	110120	Coil, Solenoid	A/R
11	105850	Nipple 1 x 2 BI	1
12	100263	Strainer Line 1-1/4" BI	1
13	105875	Nipple 1-1/4 x 3 BI	1
14	105773	Tee Red 1-1/4" x 1 x 1 BI	1
15	105765	Tee Red 1 x 3/4 x 3/4 BI	1
16	103465	Bush Red 3/4 x 1/2 BI	1
17	102402	Bush Red 1/2 x 1/4 BI	1
18	100123	Cock Gauge 1/4	1
19	105803	Nipple Close 3/4NPT BI	2
20	106485	Union Elbow 3/4 x 90 Female BI	2
21	105779	Union 3/4"NPT BI	1
22	111490	Nipple 3/4 x 90 BI	2
23	105730	Elbow 3/4 x 90 BI	1
24	111495	Nipple 3/4 x 6-1/4 BI	1
25	109887	Valve 3/4" Steam	1
26	108516	Coil, Valve	A/R
27	109903	Kit Repair 3/4" Stm-Water	A/R
28	XXXXX	Nipple (Call Factory to Confirm Application)	A/R
29	XXXXX	Elbow Street (Call Factory to Confirm Application)	A/R
30	XXXXX	Nipple (Call Factory to Confirm Application)	A/R
31	102451	Elbow Red 1 x 3/4 x 90 Brass	2
32	101000	Nipple Close 1" NPT Brass	5
33	102450	Elbow Street 1 x 90 Brass	3
34	102551	Union 1NPT Brass	1
35	100269	Valve Pressure Reducing 1" Water	1
36	101248	Strainer Line 1" Brass	1
37	105738	Elbow Red 3/4 x 1/2 x 90 Brass	1
38	105782	Nipple Close 1/2NPT BI	7
39	100147	Elbow Street 1/2 x 90 BI	1
40	XXXXX	Nipple (Call Factory to Confirm Application)	A/R
41	102288	Elbow 1/2 x 90 BI	5
42	XXXXX	Nipple (Call Factory to Confirm Application)	A/R
43	105778	Union 1/2 NPT BI	2
44	111380	Trap Steam 1/2"NPT	2
45	XXXXX	Nipple (Call Factory to Confirm Application)	A/R
46	105757	Tee Red 3/4 x 1/2 x 1/2 BI	1

STEAM BOOSTER
(SIDE MOUNTED)

Fig. 35 Item No.	Part No.	Part Description	Qty
47	105796	Nipple 1/2 x 7 BI	1
48	109069	Thermostat w/Capillary	1
49	102532	Tee Red 1 x 1/2 x 1 Brass	1
50	104649	Valve Relief 3/4	1
51	102535	Tee Red 1 x 1 x 3/4 Brass	1
52	108296	Union 1C x 1MPT	1
53	XXXXX	Copper Tubing	A/R
54	108342	Elbow 1C x 90 Copper	1
55	203152	Tubing 1" x 10" Copper Type L	1
56	109900	Tee Red 1C x 1/2 F x 1C Brass	1

THIS PAGE INTENTIONALLY LEFT BLANK

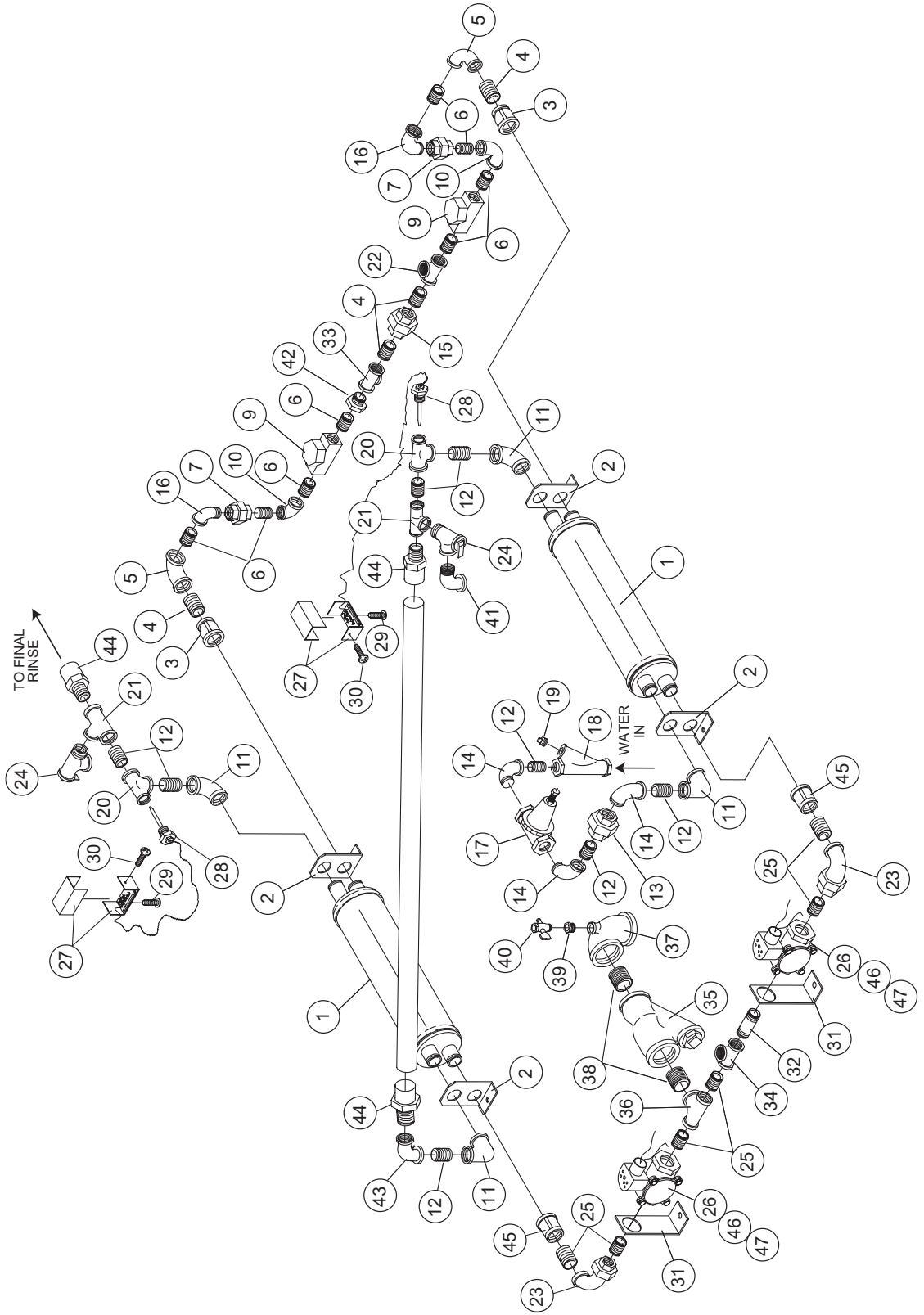

Figure 37-
Low Pressure Steam Booster

LOW PRESSURE STEAM BOOSTER

Fig. 37 Item No.	Part No.	Part Description	Qty
1	110189	Booster K2 Spirec	2
2	315596	Bracket Booster Support	4
3	105725	Coupling, Red 1" x 3/4" BI	2
4	105803	Nipple Close 3/4" BI	4
5	105738	Elbow, Red 3/4" x 1/2" x 90 BI	2
6	105782	Nipple Close 1/2" BI	8
7	105778	Union 1/2" BI	2
8	105796	Nipple 1/2" x 7" BI	1
9	111380	Trap Steam 1/2"	2
10	102288	Elbow 1/2" x 90 BI	2
11	102451	ELbow, Red 1" x 3/4" x 90 Brass	4
12	101000	Nipple Close 1" Brass	8
13	102551	Union 1"NPT Brass	1
14	102450	Elbow, Street 1" x 90 Brass	3
15	105779	Union 3/4"NPT BI	1
16	100147	Elbow, Street 1/2" x 90 BI	2
17	100269	Valve Pressure Red 1" Water	1
18	101248	Strainer Line 1" Bronze	1
19	102505	Plug 3/4"NPT Brass	1
20	102532	Tee, Red 1" x 1/2" x 1" Brass	2
21	102535	Tee, Red 1" x 1" x 3/4" Brass	1
22	105757	Tee, Red 3/4" x 1/2" x 1/2" BI	1
23	107211	Union Elbow 1" x 90 Female BI	2
24	104649	Valve Relief 3/4"	2
25	105847	Nipple Close 1"NPT BI	6
26	110005	Valve 1" Steam	2
27	107922	Thermostat Base & Cover	2
28	109069	Thermostat w/Capillary	2
29	100100	Screw 8-32 x 1/4" Round Head	2
30	106460	Screw 6-32 x 1/4" Truss Head	4
31	309498	Bracket, Piping Support	2
32	105850	Nipple 1" x 2" BI	1
33	105752	Tee 3/4"NPT BI	1
34	105753	Tee 1"NPT BI	1
35	106051	Strainer Line 2" BI w/Plug	1
36	106732	Tee, Red 1" x 1" x 2" BI	1
37	111280	Tee, Ree 2" x 1/2" x 2" BI	1
38	106607	Nipple Close 2"NPT BI	2
39	102402	Bushing, Red 1/2" x 1/4" BI	1
40	100123	Cock Gauge 1/4"	1
41	108423	Elbow, Street 3/4C x 90 Copper	1
42	103465	Bushing, Red 3/4" x 1/2" BI	2
43	102448	Elbow 1" x 90 Brass	1
44	108296	Union 1C x 1MPT	3
45	100204	Coupling 1NPT BI	2
46	110007	Kit Repair 1" Steam	A/R
47	110120	Coil, Solenoid 1"	A/R

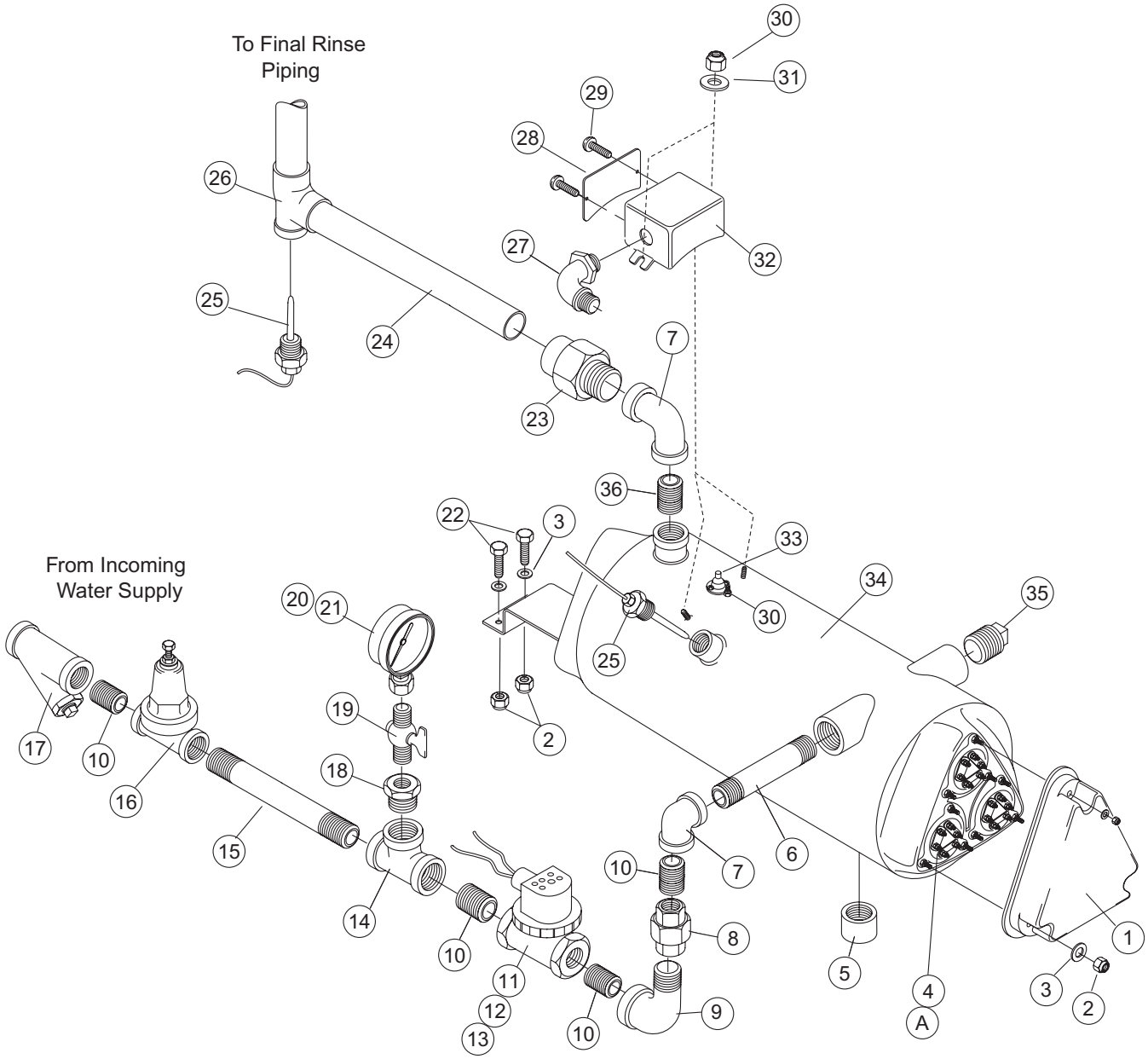

Figure 38-
Electric Booster 40˚ Rise
(Mounted under Tank)

ELECTRIC BOOSTER 40˚ RISE
(MOUNTED UNDER TANK)

Fig. 38 Item No.	Part No.	Part Description	Qty
1	108576	Cover Booster No Cut Out	1
2	107967	Nut, Grip 1/4-20 w/Nylon Insert	7
3	106026	Washer, Flat 1/4"	7
4	111334	Heater 9/12kW (208V, 240V, 380V) (After S/N 82569)	3
	108580	Heater 9kW (208V, 240V) (Prior to S/N 82568)	3
*	111235	Heater 5/6.6kW (208V, 240V)	1
	111305	Heater 9kW (230V)	3
	108579	Heater 9kW (480V)	3
	111122	Heater 9kW (575V)	3
5	111118	Cap 3/4" NPT Brass	1
6	102470	Nipple 3/4 x 3 Brass	1
7	102451	Elbow 1 x 3/4 x 90 Brass	2
8	102551	Union 1NPT Brass	1
9	102540	Elbow Street 1 x 90 Brass	1
10	101000	Nipple Close 1NPT Brass	5
11	111438	Valve 1" hw	1
12	108516	Coil, Valve	A/R
13	109904	Kit Repair 1" Stm-Water	A/R
14	101026	Tee Reducing 1 x 1 x 1/2	1
15	102767	Nipple 1 x 5 Brass	1
16	100269	Valve Pressure Reducing 1"	1
17	101248	Strainer Line 1" Bronze	1
18	102388	Bushing Red 1/2 x 1/4 Brass	1
19	100123	Cock Gauge 1/4	1
20	100135	Pressure Gauge 0-60 PSI	1
21	109765	Overlay Pressure Gauge	1
22	100734	Bolt 1/4-20 x 12/ Hex Head	4
23	108296	Union 1C x 1MPT	1
24	203152	Tubing 1 x 10 Copper	1
25	109069	Thermostat w/Capillary	1
26	109900	Tee Red 1C x 1/2F x 1C Brass	1
27	103217	Connector, Sealtite 1/2 x 90	1
28	110930	Cover, Box	1
29	106460	Screw 6/32 x 3/8 Round Head	4
30	107966	Nut, Grip 10-32 w/Nylon Insert	4
31	107033	Washer, Flat #10	2
32	110929	Box, Thermostat	1
33	110562	Thermostat, Hi Limit	1
---	110563	Compound Heat Sink	A/R
34	305407	Tank, Booster	1
35	102505	Pipe Plug 3/4NPT Brass	1
36	100184	Nipple Close 3/4NPT Brass	1
	A	**ELEMENT HARDWARE (per element)**	
	109985	Seal, Electric Heater Flanged	1
	100003	Nut, Plain 1/4-20	3
	106482	Washer, Lock 1/4 Split	3

*When less than 3 elements used in booster tank, requires the following to block off unused element holes:

	109458	Block Off, Heater	A/R
	112257	O-ring	A/R
	100003	Nut, Plain 1/4-20	3
	106482	Washer, Lock 1/4 Split	3

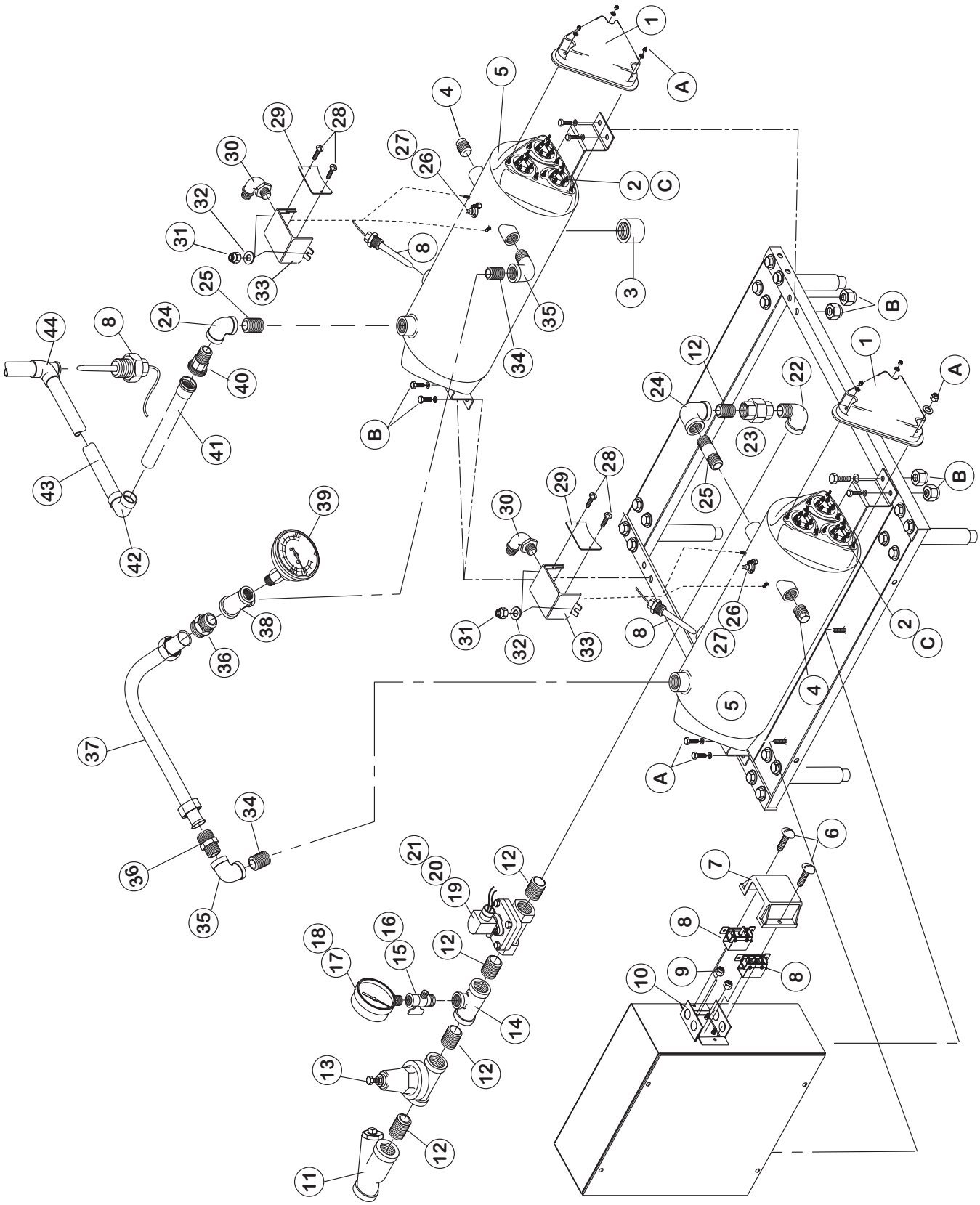

Figure 39-
Electric Booster 70˚ Rise
(Side Mounted Booster)

ELECTRIC BOOSTER 70˚ RISE
(SIDE MOUNTED BOOSTER)

Fig. 39 Item No.	Part No.	Part Description	Qty
1	108576	Cover Booster No Cut Out	2
* 2	111334	Heater 9kW (208V, 240V) (After S/N 82570)	5
	108580	Heater 9kW (208V-240V) (Prior to S/N 82569)	5
	111305	Heater 9kW (230V) (After S/N 82570)	5
	111334	Heater 9kW (380V)	5
	111305	Heater 9kW (415V)	5
	108579	Heater 9kW (480V)	5
	111122	Heater 9kW (575V)	5
3	111118	Cap 3/4NPT Brass	2
4	102505	Plug 3/4NPT Brass	2
5	305407	Booster Assy	2
6	100734	Bolt 1/4-20 x 1" Hex Head	2
7	109682	Cover (Box) Moplenx	1
8	109069	Thermostat w/Capillary	3
9	100141	Nut, Grip 1/4-20	2
10	314102	Dual Thermostat Box	1
11	101248	Strainer Line 1" Bronze	1
12	101000	Nipple Close 1NPT Brass	5
13	100269	Valve Pressure Reducing 1"	1
14	101026	Tee Red 1 x 1 x 1/2 Brass	1
15	102388	Bush Red 1/2 x 1/4 Brass (Not Shown)	1
16	100123	Cock Gauge 1/4	1
17	100135	Pressure Gauge 0-60 PSI	1
18	109765	Overlay Pressure Gauge	1
19	111438	Valve 1" HW	1
20	108516	Coil, Valve	A/R
21	109904	Kit Repair 1" Stm-Water	A/R
22	102450	Elbow Street 1 x 90 Brass	2
23	102551	Union 1NPT Brass	1
24	102451	Elbow Red 1 x 3/4 x 90 Brass	2
25	102651	Nipple 3/4 x 2 Brass	2
26	110562	Thermostat, Fixed Snap	2
27	107966	Nut, Grip 10-32 w/Nylon Insert	4
28	106460	Screw 7-32 x 3/8 Round Head	4
29	110930	Cover, Booster Thermostat Box	2
30	103217	CND Sealtite 90˚ 1/2"	2
31	107966	Nut, Grip 10-32 w/Nylon Insert	4
32	107033	Washer .028 x .437 x .047	4
33	110929	Box Booster Thermostat	2
34	100184	Nipple Close 3/4NPT Brass	2
35	102444	Elbow Street 3/4 x 90	2
36	109879	Fitting Compression 7/8OD x 3/4MPT Brass	2
37	XXXXX	Copper Tubing (Call Factory to Confirm Application)	A/R
38	102525	Tee Red 3/4 x 1/2 x 3/4 Brass	1
39	104682	Thermometer 1/2"NPT Stem	1
40	108296	Union 1C x 1MPT	1

ELECTRIC BOOSTER 70° RISE
(SIDE MOUNTED BOOSTER)
(CONT'D)

Fig. 38 Item No.	Part No.	Part Description	Qty
41	XXXXX	Copper Tubing (Call Factory to Confirm Application)	A/R
42	108342	Elbow 1C x 90 Copper	1
43	203152	Tubing 1 x 10 Copper	1
44	109900	Tee Red 1C x 1/2F x 1C	1
	A	**HARDWARE FOR BOOSTER COVER (per tank)**	
	107967	Nut, Grip 1/4-20 w/Nylon Insert	3
	106026	Washer, Flat 1/4"	3
	B	**HARDWARE FOR MOUNTING BOOSTER (per tank)**	
	100734	Bolt 1/4-20 x 1/2 Hex Head	4
	106026	Washer, Flat 1/4"	4
	107967	Nut, Grip 1/4-20 w/Nylon Insert	4
	C	**ELEMENT HARDWARE (per element)**	
	109985	Seal, Electric Heater Flanged	1
	100003	Nut, Plain 1/4-20	3
	106482	Washer, Lock 1/4" Split	3

*When less than 3 elements used in booster tank, requires the following to block off unused element holes:

109458	Block Off, Heater	A/R
112257	O-ring	A/R
100003	Nut, Plain 1/4-20	3
106482	Washer, Lock 1/4 Split	3

THIS PAGE INTENTIONALLY LEFT BLANK

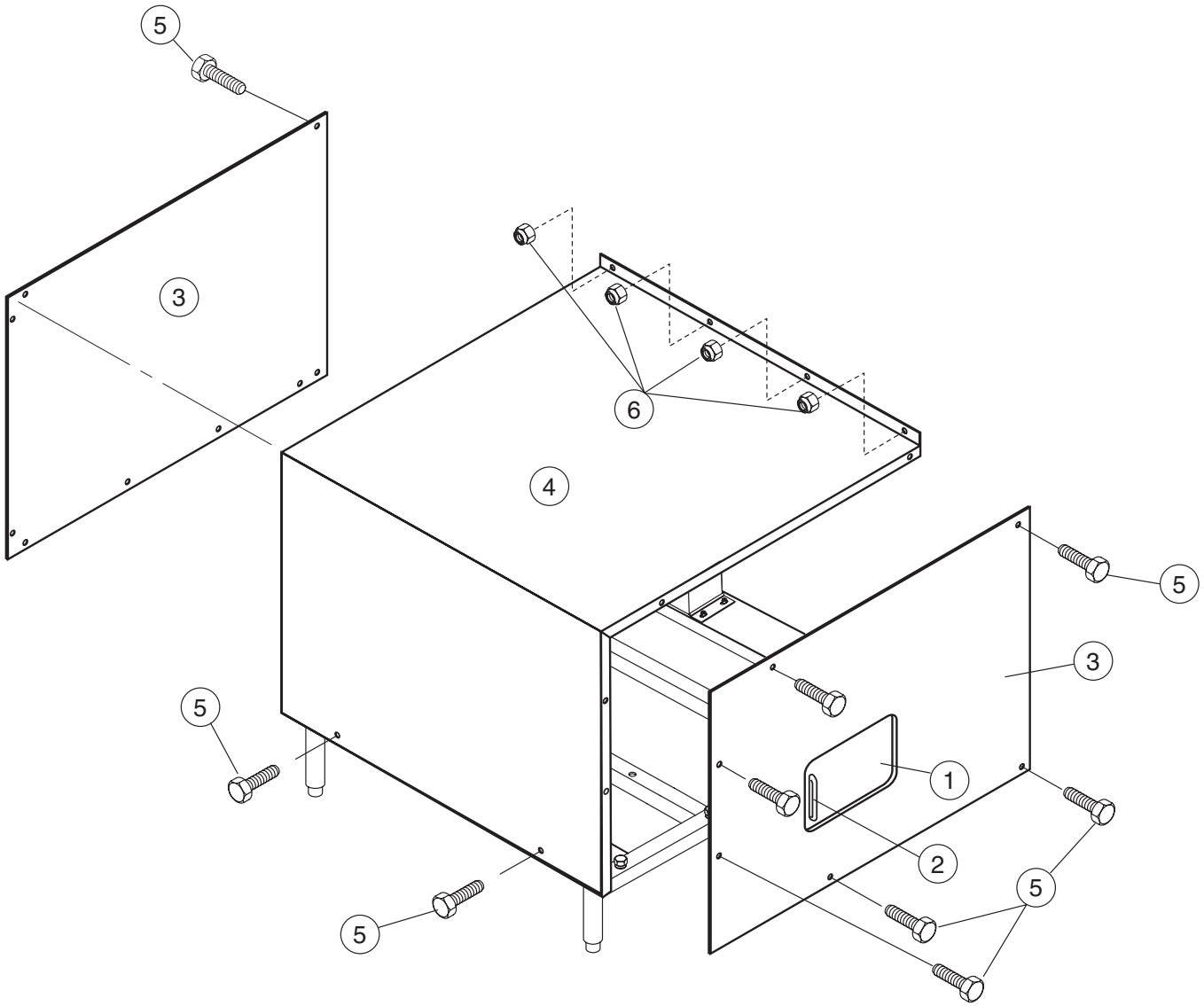

Figure 40-
Side Mount
Booster Cabinet

SIDE MOUNT
BOOSTER CABINET

Fig. 40 Item No.	Part No.	Part Description	Qty
1	305626	Door Slide Access Panel	1
2	108581	Caplug	1
3	317571	Panel Weldment Front & End	2
4	317570	Cover Development Booster	1
5	100007	Screw 10-32 x 3/8 Truss Head	14
6	107967	Nut Grip 1/4-20 w/Nylon Insert	4

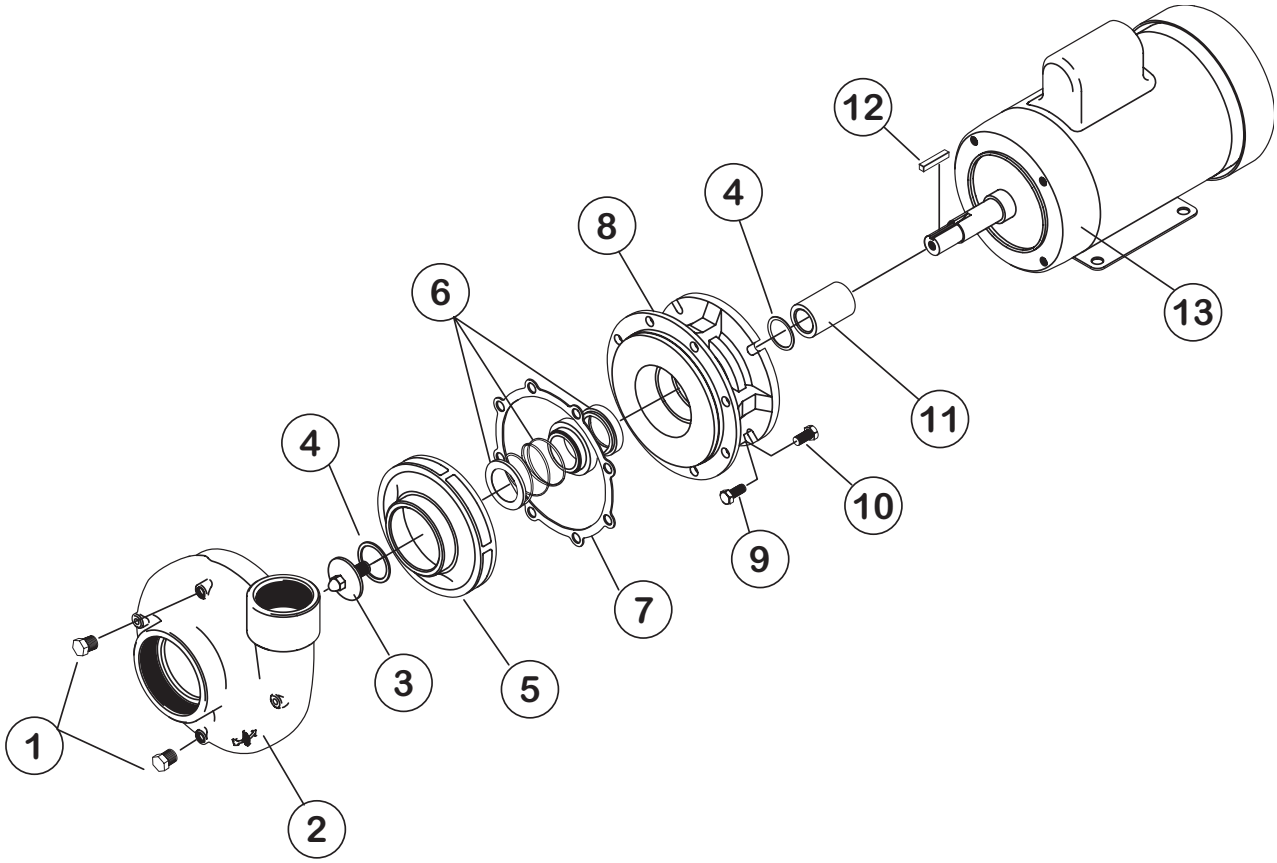

Figure 41-
Pump Assembly

PUMP ASSEMBLY

Fig. 41 Item No.	Part No.	Part Description	Qty
1	111410	Plug 1/8 Pipe	2
2	111403	Volute 7.5HP PP28 (Prior to S/N 86693)	1
	112005	Volute 7.5HP PP28 (After S/N 86694)	1
3	111189	Impeller Lock Screw	1
4	111405	Sleeve Gasket PP28	1
5	111379	Impeller Only (Prior to S/N 86693)	1
	112006	Impeller Only (After S/N 86694)	1
6	110853	Seal & Seat	1
7	109972	Gasket 7.5HP	1
8	111404	Seal Housing 7.5HP	1
9	111409	Bolt, Motor	8
10	111408	Bolt, Volute	8
11	111406	Sleeve PP28	1
12	111191	Impeller Key	1
13	111186	Motor 7.5HP MV/60/3	1
---	900009	Kit*PP28 Seal & Gasket (Includes items 6 & 7)	
---	900010	Kit*PP28 Pump Only Old Style (Includes items 1-12) (Prior to S/N 86693)	
---	900751	Kit*PP28 Pump Only New Style (Includes items 1-12) (After S/N 86694)	
---	109518	Pump/Motor Assembly Complete	

Pump Assembly (Wash Down) Navy Only

13	113458	Pump/Motor Assembly (Wash Down Motor) (Navy Machine Only) (S/N J1575)	1
---	109514	Nipple Toe 3" x 2-1/2" (Not Shown)	1
---	106488	Elbow Street 2" x 90 (Not Shown)	1

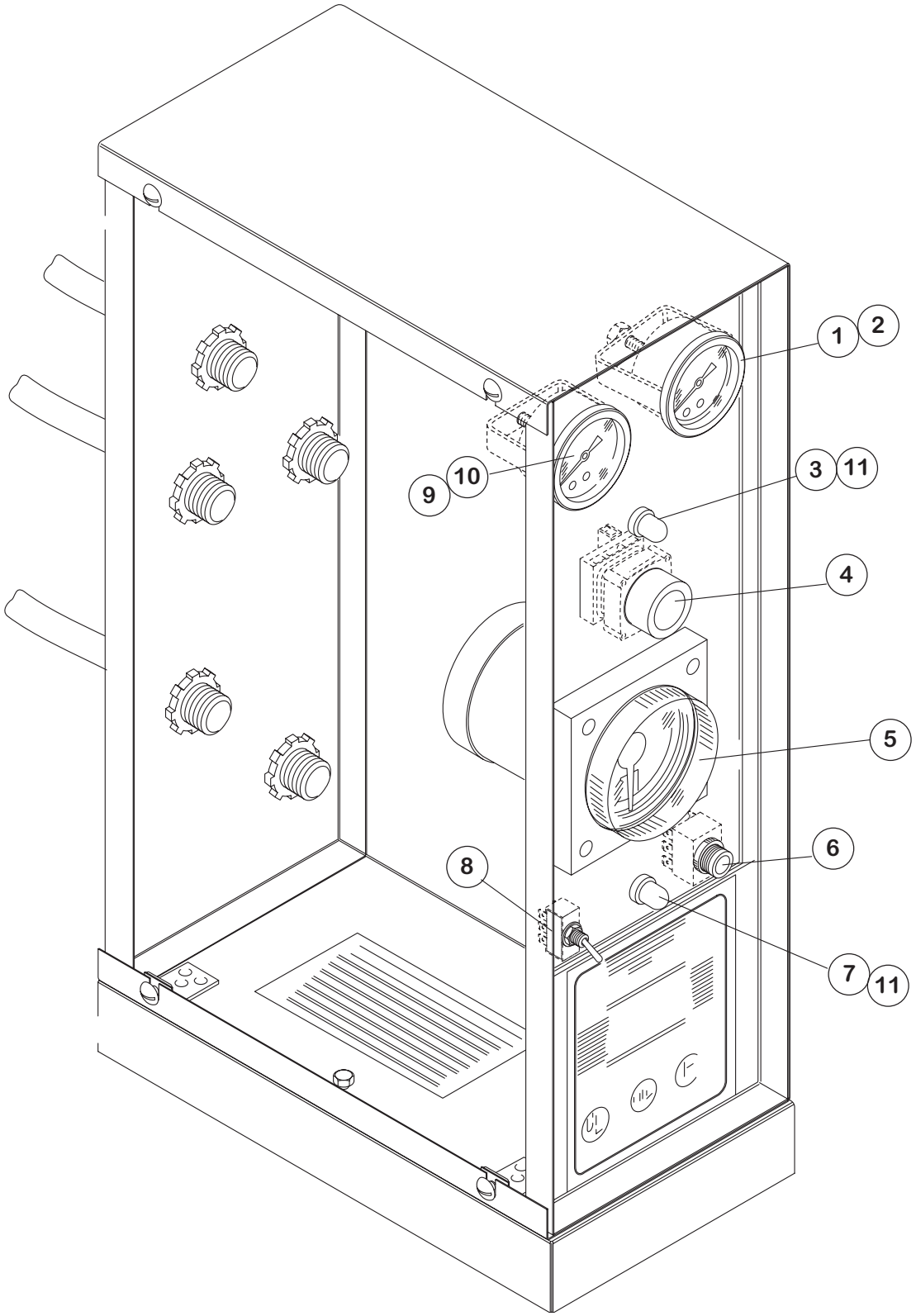

Figure 42-
Machine Control Panel

MACHINE CONTROL PANEL

Fig. 42 Item No.	Part No.	Part Description	Qty
1	108391	Thermometer (Wash)	1
2	——	Overlay	1
3	101128	Pilot Light 120V Red	1
4	900725	Kit*Pushbutton Green NO	1
---	111614	Green Pushbutton	A/R
---	111617	Contact Block NO	A/R
---	113140	Silicone Boot	A/R
5	104574	Timer 0-5 Minute 120V	1
6	108311	Circuit Breaker 3Amp	1
7	106364	Pilot Light 120V Green	1
8	107351	Switch, Toggle DPDT On/None/On	1
9	107440	Thermometer 8ft Flanged (Rinse)	1
10	112090	Overlay	1
11	108370	Washer Lock	2

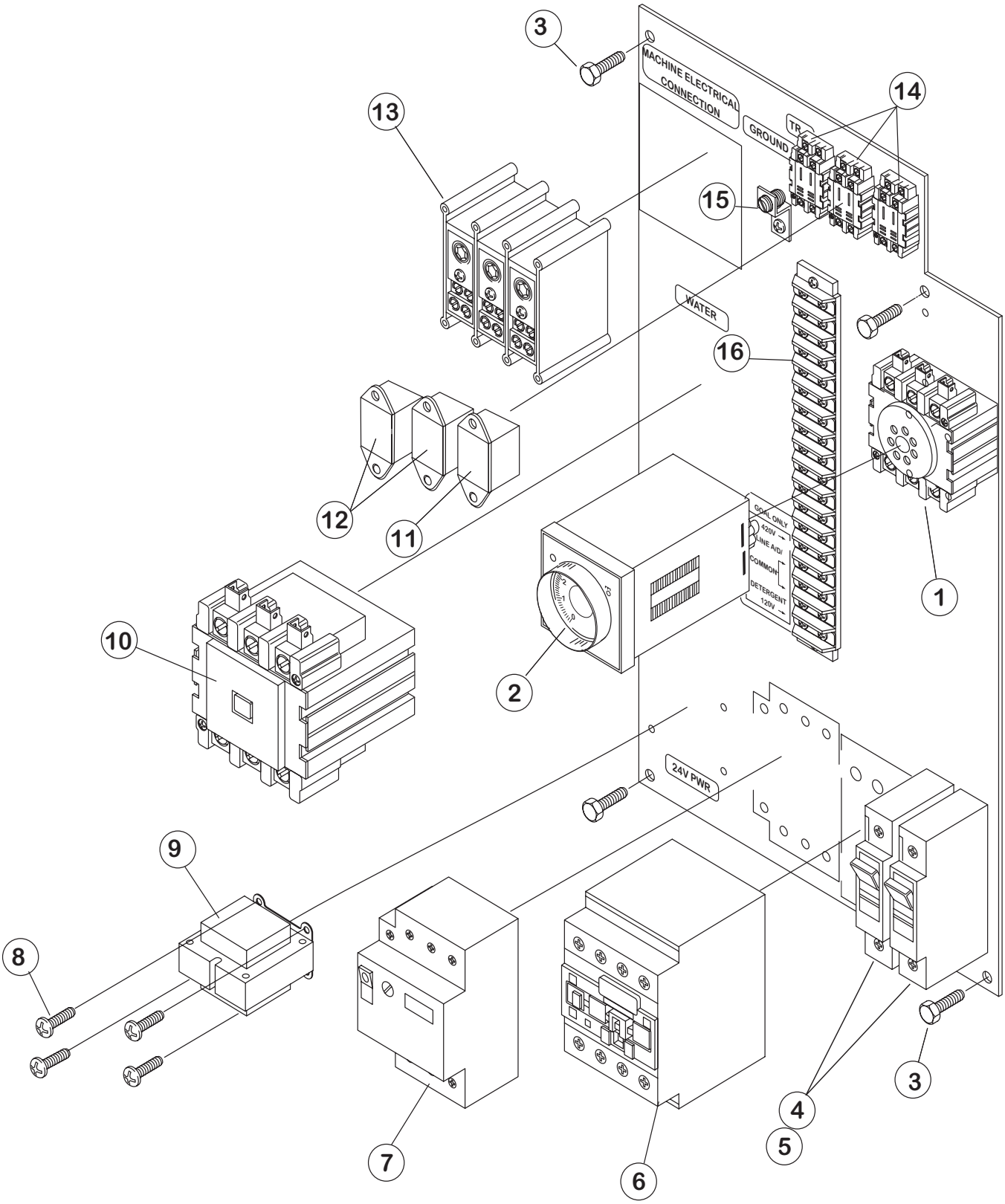

Figure 43-
Machine Control Cabinet

MACHINE CONTROL CABINET

Fig. 43 Item No.	Part No.	Part Description	Qty
1	112352	Timer Socket	1
2	112374	Timer Omron	1
3	100735	Bolt 1/4-20 Hex Head	4
4	111153	Fuse Block Din Rail 600V 35Amp (Control) (After S/N J1263)	2
	100089	Fuse Block (Control) (208V-240V) (Prior to S/N J1262)	1
	106925	Fuse Block (Control) (480V) (Prior to S/N J1262)	1
*	107005	Fuse Block (Motor) (208V-240V) (Prior to S/N J1262)	1
*	106402	Fuse Block (Motor) (480V) (Prior to S/N J1262)	1
5	111823	Fuse ATDR-6 600V Time Delay (Control) (After S/N J1263)	2
	108506	Fuse TR-25 250V Time Delay (Control)(208V-240V)(Prior to S/N J1262)	2
	100473	Fuse ATMR-3 600V (Control) (480V) (Prior to S/N J1262)	2
*	100927	Fuse TR-30 250V (Motor) (208V-240V) (Prior to S/N J1262)	2
*	100929	Fuse ATMR-30 600V (Motor) (480V) (Prior to S/N J1262)	2
6	109582	Contactor 25Amp (Pump Motor)	1
7	111632	Starter Motor 18.0-25.0 (208V-240V) (After S/N J1264)	1
	111651	Overload Relay (208V-240V) (S/N Range 85020-J1263)	1
	109583	Overload Relay (208V-240V) (Prior to S/N 85019)	1
	111649	Overload Relay (380V, 415V, 575V) (After S/N 85256)	1
	108120	Overload Relay (380V, 415V, 480V, 575V) (Prior to S/N 85255)	1
	113161	Starter Motor (480V) (After S/N J1264)	1
	111649	Overload Relay (480V) (S/N Range 85256-J1263)	1
8	100095	Screw 10-32 x 3/8 Round Head	4
9	111277	Transformer 120V:24V 50/60Hz	1
10	111826	Contactor 60FLA 3P (Tank Heat) (After S/N J1424)	1
	105514	Contactor 50FLA 3 Pole (Tank Heat) (Prior to S/N J1423)	1
11	111068	Relay 2PDT 10Amp 120V	1
12	111067	Relay 2PDT 10Amp 24V	1
13	111833	Terminal Block 185Amp 3 Pole 600V	1
14	111036	Relay Socket	2
15	103310	Wire Lug	1
16	108607	Terminal Block 18PT	1
17	111639	Contact Auxiliary (Not Shown) (After S/N 85021)	1
	108130	Contact Auxiliary (Not Shown) (Prior to S/N 85020)	1

* Fuse blocks and fuses for the motors were removed from the control cabinets that were built for machines after S/N J1263

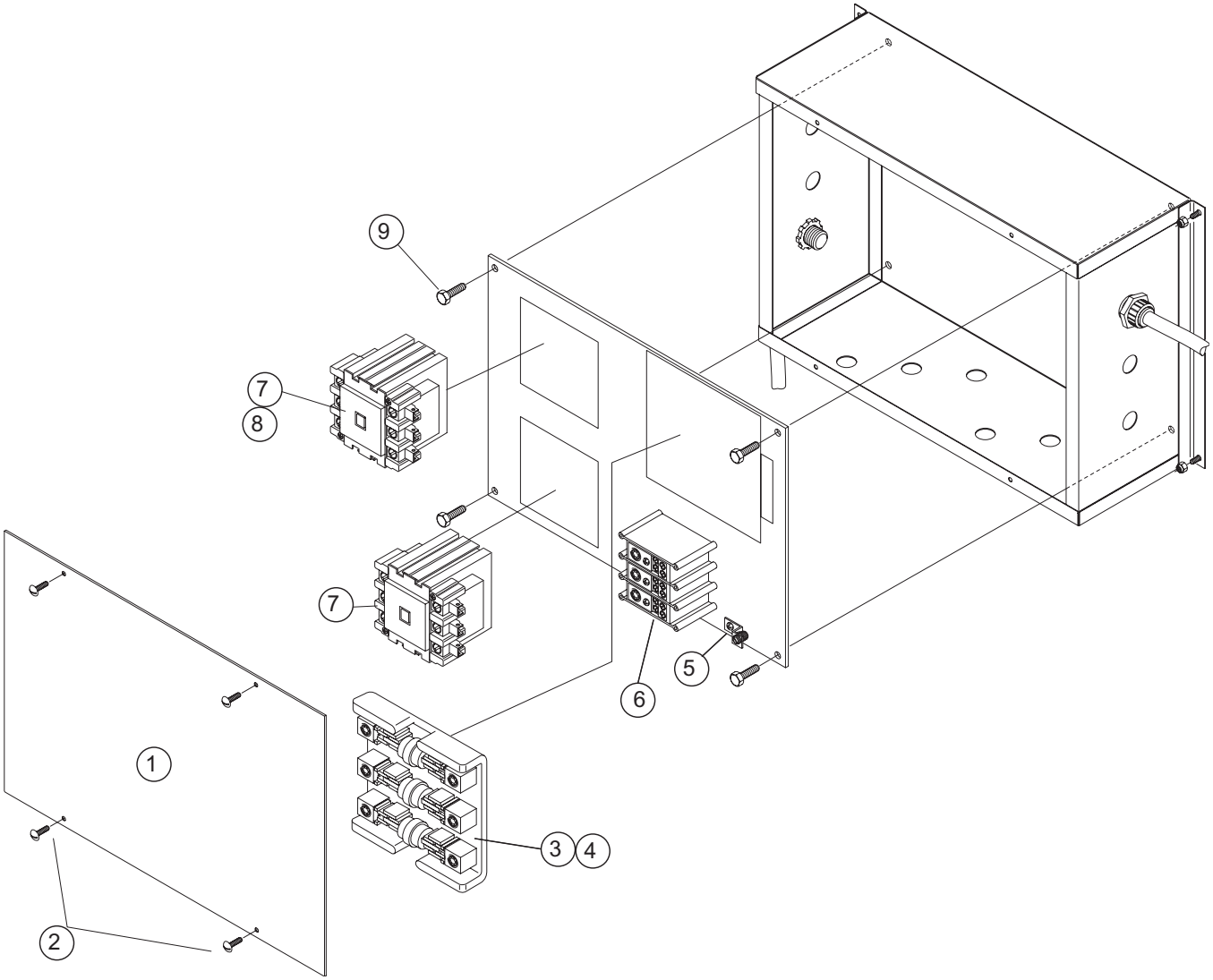

Figure 44-
Booster Control Cabinet
(Single Tank Canister Shown)

BOOSTER CONTROL CABINET

Fig. 44 Item No.	Part No.	Part Description	Qty
1	317923	Cover Control Cabinet	1
2	100095	Screw 10-32 x 3/8 Hex Head	2
3	108424	Fuse Block 600V/100Amp 40˚ Rise (208V-240V)	1
	180171	Fuse Block 600V/60Amp 40˚ Rise (380V, 415V, 480V, 575V)	1
	108424	Fuse Block 600V/100Amp 70˚ Rise (208V-240V)	2
	180171	Fuse Block 600V/60Amp 70˚ Rise (380V, 415V, 480V, 575V)	2
4	180042	Fuse 100A 300V (208V) 40˚ & 70˚ Rise	3
	108448	Fuse 90A 250V (230V, 240V) 40˚ & 70˚ Rise	3
	180176	Fuse 60A 600V (380V, 415V) 40˚ & 70˚ Rise	3
	180175	Fuse 50A 600V (480V) 40˚ & 70˚ Rise	3
	180172	Fuse 35A 600V (575V) 40˚ Rise	3
	180060	Fuse 70A 250V (208V-240V) 70˚ Rise	3
	180174	Fuse 45A 600V (380V, 415V) 70˚ Rise	3
	180172	Fuse 35A 600V (480V) 70˚ Rise	3
	180172	Fuse 35A 600V (575V) 70˚ Rise	6
5	103310	Wire Lug	1
6	111833	Terminal Block 185Amp 3Pole	1
7	111827	Contactor 60FLA 3P 40˚ Rise (After S/N 86361)	2
	103210	Contactor 60Amp 40˚ Rise (Prior to S/N 86360)	1
	105514	Contactor 50Amp 40˚ Rise (Prior to S/N 86360)	1
8	111827	Contactor 60FLA 70˚ Rise (208V-240V, 480V) (After S/N 86361)	3
	111827	Contactor 60FLA 70˚ Rise (380V, 415V, 575V)(After S/N 86361)	2
	103210	Contactor 60Amp 70˚ Rise (208V-240V, 480V)(Prior to S/N 86360)	2
	103210	Contactor 60Amp 70˚ Rise(380V, 415V, 575V)(Prior to S/N 86360)	1
9	100735	Bolt 1/4-20 x 5/8 Hex Head	4

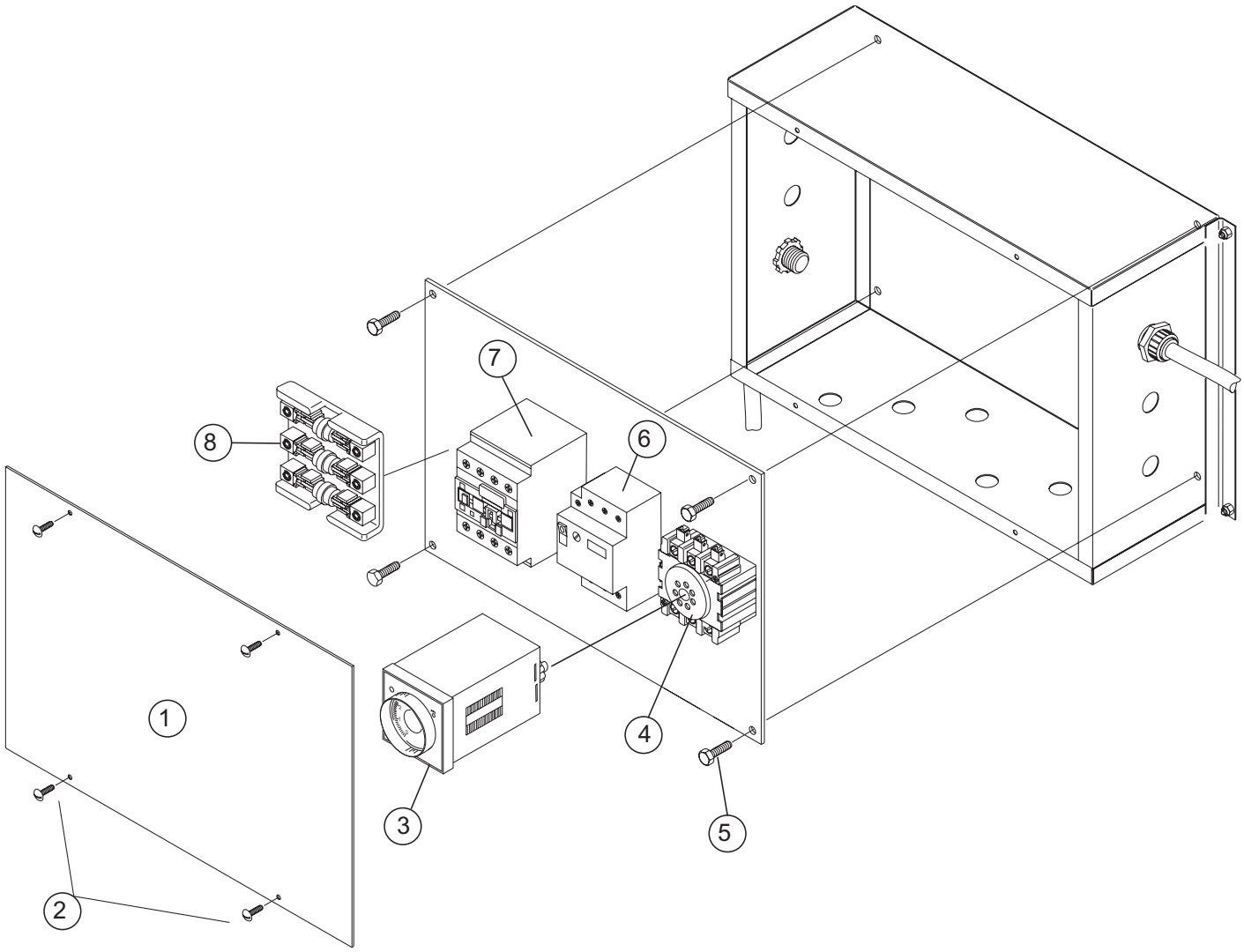

Figure 45-
Vent Fan Control Cabinet
(Optional)

VENT FAN CONTROL CABINET (OPTIONAL)

	Fig. 45 Item No.	Part No.	Part Description	Qty
	1	313620	Cover Control Cabinet	1
	2	100095	Screw 10-32 x 3/8 Round Head	2
	3	112351	Timer Omron	1
	4	112352	Timer Socket	1
	5	100735	Bolt 1/4-20 x 5/8 Hex Head	4
	6	111626	Starter Motor 1.6-2.4Amp (208V-240V) (After S/N J1323)	1
		111645	Overload Relay (208V-240V) (S/N Range 85020 - J1322)	1
		108117	Overload Relay (208V-240V) (Prior to S/N 85019)	1
		111624	Starter Motor 0.6-1.0Amp (480V) (After S/N J1323)	1
		111643	Overload Relay (480V, 575V) (S/N Range 85020 - J1322)	1
		108119	Overload Relay (480V, 575V) (Prior to S/N 85019)	1
	7	108122	Contactor 12Amp (All Voltages)	1
*	8	100089	Fuse Block 250V 300Amp (Prior to S/N J1323)	1
		106925	Fuse Block (480V, 575V) (Prior to S/N J1323)	1
*	9	106145	Fuse OT-6 250V (208V-240V) (Prior to S/N J1323)	3
		100473	Fuse ATMR-3 600V (480V, 575V) (Prior to S/N J1323)	3

* Fuse blocks and fuses were removed from the control cabinets built after S/N J1323.

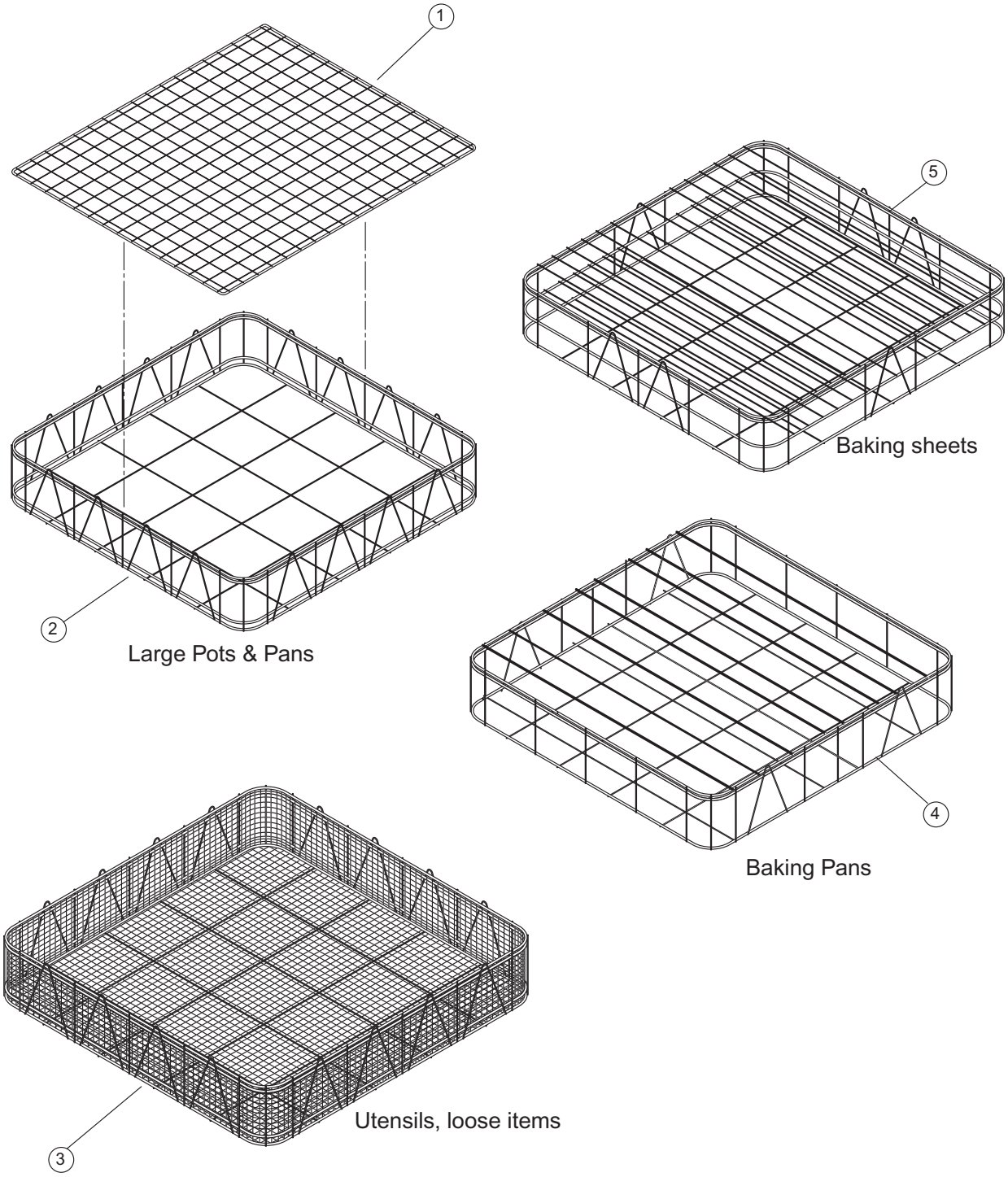

Figure 46-
Racks

RACKS

Fig. 46 Item No.	Part No.	Part Description	Qty
1	300960	Grid Hold Down PP28	1
2	109586	Rack Utility	A/R
3	109584	Rack Basket	A/R
4	109585	Rack Pan	A/R
5	109587	Rack Bake Sheet	A/R

THIS PAGE
INTENTIONALLY
LEFT BLANK

ELECTRICAL SCHEMATICS

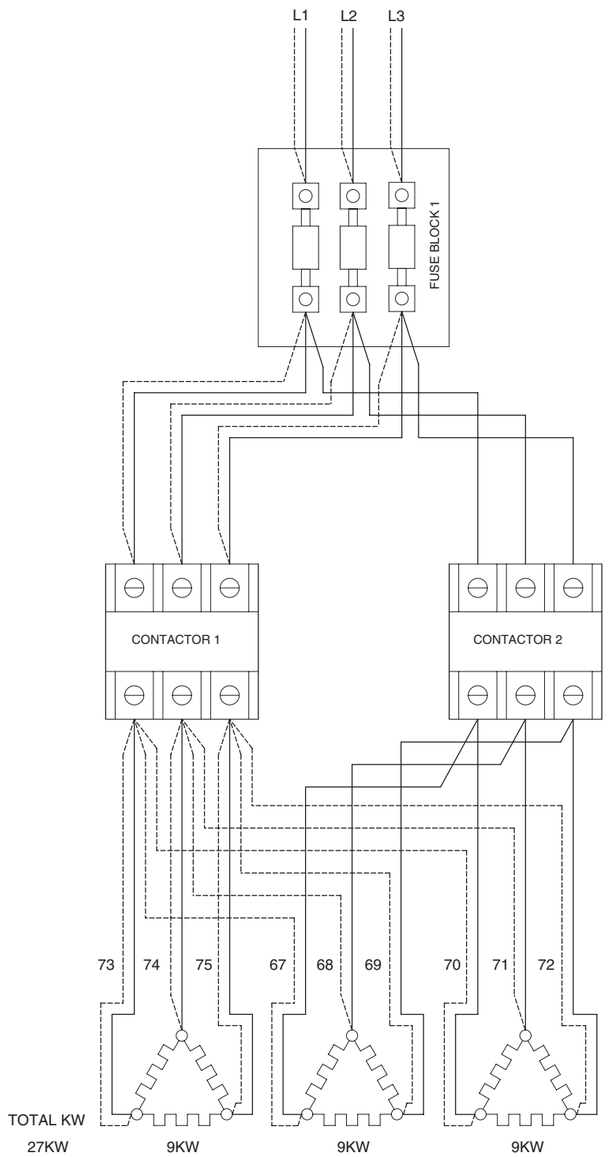

CANISTER 1

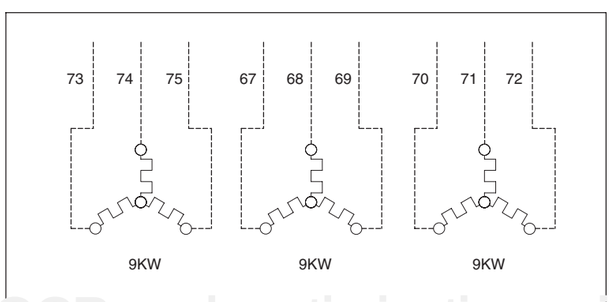

"Y" CONNECTION 380/415V ONLY

CUSTOMER TO SUPPLY RATED VOLTAGE/PHASE/Hz, AS SPECIFIED PER ORDER, TO DISCONNECT SWITCH. ALL POWER SUPPLIED TO EACH CONNECTION POINT MUST COMPLY WITH ALL LOCAL ELECTRICAL CODES.

NOTES

CANISTER/KW 1/27	
VOLTAGE 208 HEAT KW/CONTACTOR 9,18 CONTACTOR # 1,2 RATING 50A,60A FUSE BLOCK # 1 FUSE RATING 100A	
VOLTAGE 220 HEAT KW/CONTACTOR 9,18 CONTACTOR # 1,2 RATING 50A,60A FUSE BLOCK # 1 FUSE RATING 100A	
VOLTAGE 240 HEAT KW/CONTACTOR 9,18 CONTACTOR # 1,2 RATING 50A,60A FUSE BLOCK # 1 FUSE RATING 90A	
VOLTAGE 380 HEAT KW/CONTACTOR 27 CONTACTOR # 1 RATING 60A FUSE BLOCK # 1 FUSE RATING 60A	
VOLTAGE 415 HEAT KW/CONTACTOR 27 CONTACTOR # 1 RATING 60A FUSE BLOCK # 1 FUSE RATING 60A	
VOLTAGE 480 HEAT KW/CONTACTOR 27 CONTACTOR # 1 RATING 50A FUSE BLOCK # 1 FUSE RATING 50A	
VOLTAGE 575 HEAT KW/CONTACTOR 27 CONTACTOR # 1 RATING 50A FUSE BLOCK # 1 FUSE RATING 45A	
380/415/480/575V ----------	
208/220/240V _____	

Champion	HEAT	MODEL	DATE	NUMBER/REV
	ELEC BSTR HEAT	CH-27 PP-28 27KW	93-01-29	700848/A

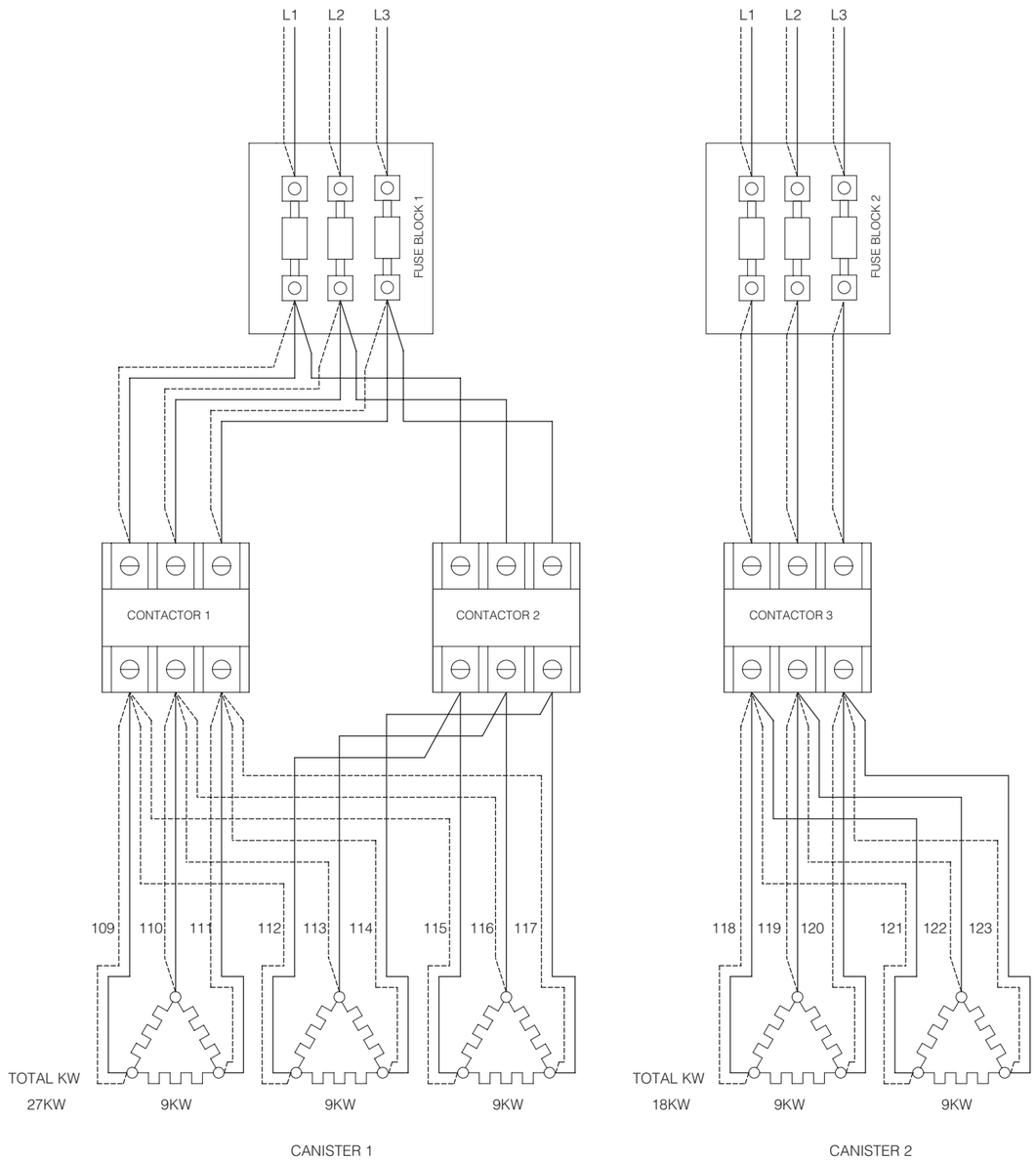

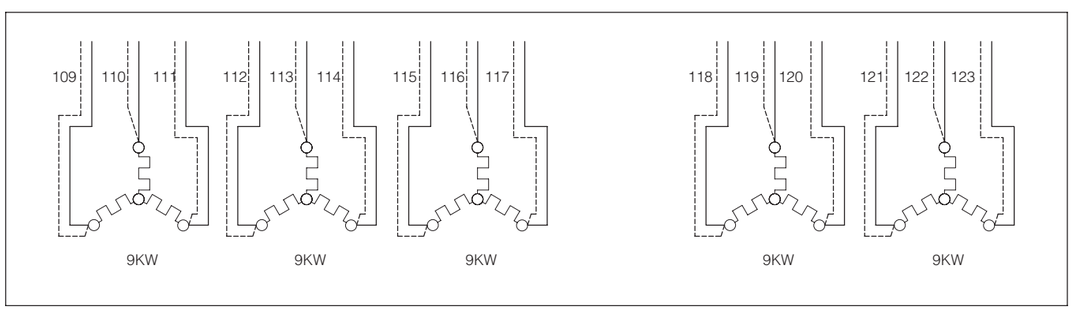

"Y" CONNECTION 380/415V ONLY

CUSTOMER TO SUPPLY RATED VOLTAGE/PHASE/Hz, AS SPECIFIED PER ORDER, TO DISCONNECT SWITCH. ALL POWER SUPPLIED TO EACH CONNECTION POINT MUST COMPLY WITH ALL LOCAL ELECTRICAL CODES.

NOTES

CANISTER/KW 1/27 2/18

VOLTAGE 208
HEAT KW/CONTACTOR 9,18 18
CONTACTOR # 1,2 3
RATING 50A,60A 60A
FUSE BLOCK # 1 2
FUSE RATING 100A 70A

VOLTAGE 220
HEAT KW/CONTACTOR 9,18 18
CONTACTOR # 1,2 3
RATING 50A,60A 60A
FUSE BLOCK # 1 2
FUSE RATING 100A 70A

VOLTAGE 240
HEAT KW/CONTACTOR 9,18 18
CONTACTOR # 1,2 3
RATING 50A,60A 60A
FUSE BLOCK # 1 2
FUSE RATING 90A 60A

VOLTAGE 380
HEAT KW/CONTACTOR 27 18
CONTACTOR # 1 3
RATING 60A 50A
FUSE BLOCK # 1 2
FUSE RATING 60A 45A

VOLTAGE 415
HEAT KW/CONTACTOR 27 18
CONTACTOR # 1 3
RATING 60A 50A
FUSE BLOCK # 1 2
FUSE RATING 60A 45A

VOLTAGE 480
HEAT KW/CONTACTOR 27 18
CONTACTOR # 1 3
RATING 50A 50A
FUSE BLOCK # 1 2
FUSE RATING 45A 35A

VOLTAGE 575
HEAT KW/CONTACTOR 27 18
CONTACTOR # 1 3
RATING 50A 50A
FUSE BLOCK # 1 2
FUSE RATING 45A 35A

380/415/480/575V ----------

208/220/240V ————————

Champion	HEAT	MODEL	DATE	NUMBER/REV
	ELEC BSTR HEAT	PP-28 CH-45 45KW	92-12-15	701177/A

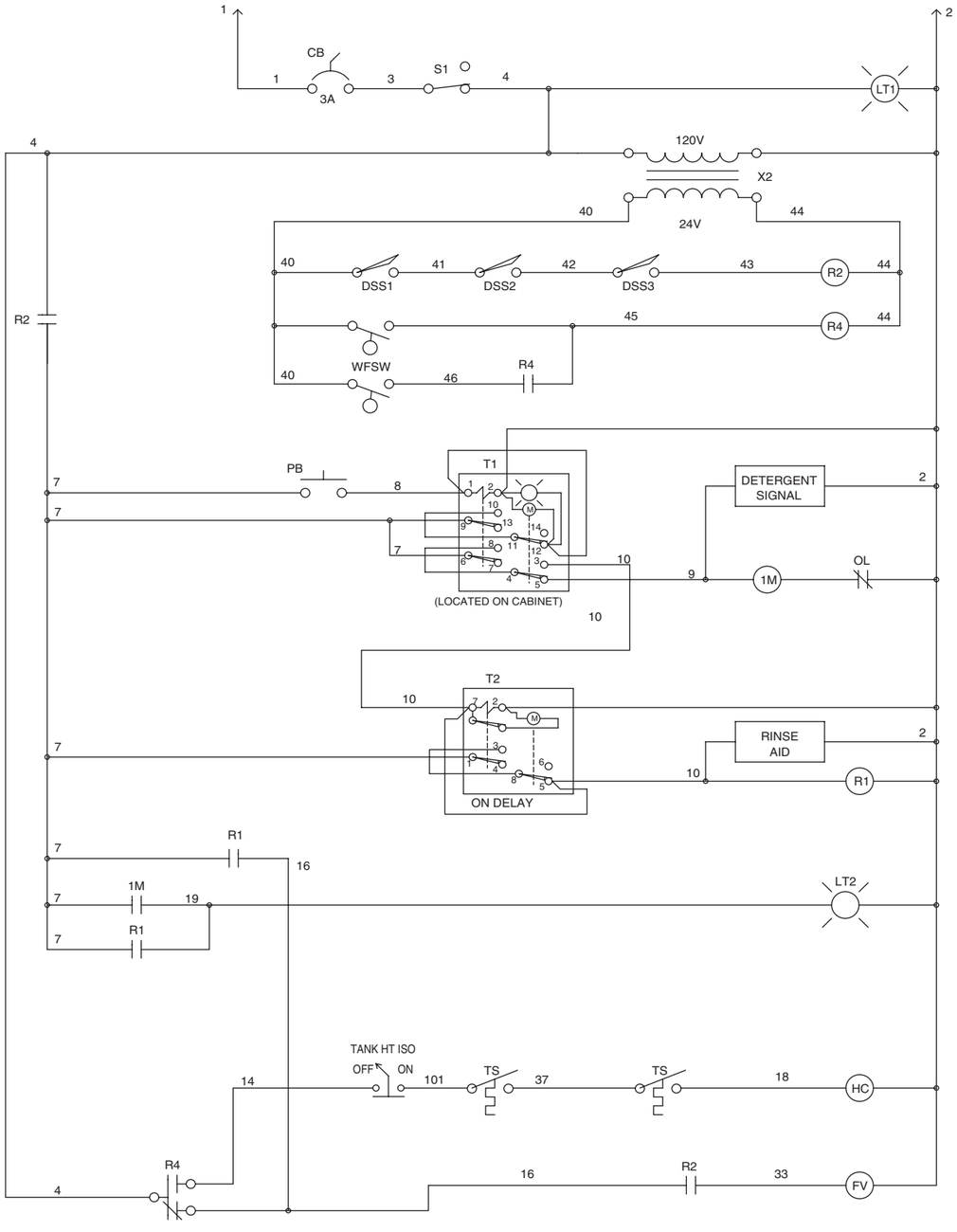

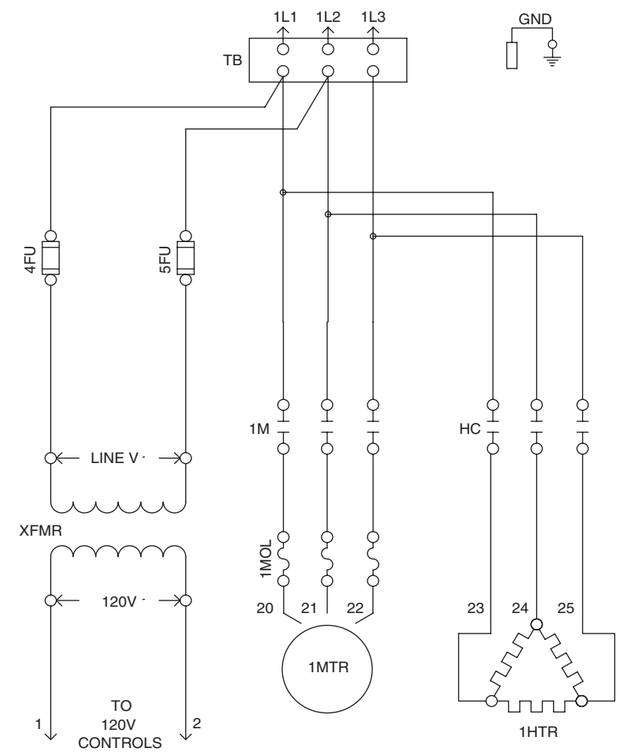

4FU,5FU	TRANSFORMER PRIMARY FUSES
1HTR	TANK HEATER
1M	PUMP MOTOR CONTACTOR
1MOL	PUMP MOTOR OVERLOAD
1MTR	PUMP MOTOR
CB	CIRCUIT BREAKER
DSS1	DOOR SAFETY SWITCH #1
DSS2	DOOR SAFETY SWITCH #2
DSS3	DOOR SAFETY SWITCH #3
FV	RINSE AND FILL VALVE
HC	TANK HEAT CONTACTOR
LT1	CONTROL POWER-ON LAMP
LT2	IN CYCLE LAMP

PB	START PUSHBUTTON
R1	RINSE RELAY
R2	FILL LOCK-OUT RELAY
R4	WASH FILL SWITCH RELAY
S1	CONTROL POWER SWITCH
T1	WASH TIMER (LOCATED ON CABIET)
T2	RINSE TIMER (LOCATED IN CONTROL CABINET)
TB	MAIN POWER TERMINAL BLOCK
TS	HEAT THERMOSTAT
WFSW	WASH FILL SWITCH
X2	LOW VOLTAGE TRANSFORMER (24 VAC.)
XFMR	CONTROL TRANSFORMER

CUSTOMER TO SUPPLY RATED VOLTAGE/PHASE/Hz, AS SPECIFIED PER ORDER,TO DISCONNECT SWITCH. ALL POWER SUPPLIED TO EACH CONNECTION POINT MUST COMPLY WITH ALL LOCAL ELECTRIC CODES.

DR.BY	J.NEWTON	SCALE	
DATE	30APR01	SHEET 1 OF 1	

REV.	DESCRIPTION	DATE	BY

REV.	DESCRIPTION	DATE	BY

Champion
The Dishwashing Machine Specialists

PP-28 SPECIAL
30 MIN. WASH TIMER - TANK HEAT ISOLATION

B 701739 REV.