Shelleymatic®

PROJECT	
ITEM #	
QUANTITY	DATE
APPROVAL	

SCF

Free-Standing Self-Contained Ice Cream Dispenser

Short Form Specifications

Exterior sides shall be 20-gauge stainless steel. Top and corner supports shall be 16-gauge stainless steel, welded, ground and polished into one integral unit.

Inner liner shall be water-tight and constructed of 22-gauge stainless steel with a 1.25" (3.2cm) I.P.S. drain. Unit shall be insulated with high-density, foamed-in-place polyurethane insulation with a non-conductive top breaker strip.

Each opening shall have an insulated, stainless steel folding lid with high impact plastic liner, molded rubber edge and black plastic handles.

(3) stainless steel louvers shall be installed in the end and sides of the cabinet to allow proper air flow to the condensing unit.

Each self-leveling mechanism shall be field adjustable by adding or removing stainless steel extension springs in the elevator housing inside the unit. The elevators shall be connected by removable platform carriers constructed of 18-gauge stainless steel.

(6) anodized aluminum divider trays will be supplied per deep cabinet section. (2) anodized aluminum divider trays will be supplied for the shallow cabinet section over the machine compartment. NOTE: See chart on back for ice cream storage capacity.

Refrigeration system shall use HFC-404A refrigerant. Refrigerant flow shall be controlled by an expansion valve. Cabinet shall maintain 0°F to 5°F (–18°C to –15°C) temperature with lids closed for storage.

Refrigeration system shall be controlled by a pressure control, located near the condensing unit.

Electrical connections shall be 115 volt, 60 cycle, single phase. Unit shall have a 9' (2.7m) long electrical cord and NEMA 5-15P plug.

Unit shall be mounted on 6.00" (15.2cm) high adjustable stainless steel legs.

Optional Accessories and Modifications

- 4.00" (10.2cm) diameter swivel casters (all locking) with corner bumpers (adds 2.50" [6.4cm] to overall length and depth and reduces overall height by 1.00" [2.5cm])
- Heavy-duty casters (contact factory)
- Corner bumpers (adds 2.50" [6.4cm] to overall length and depth)
- Wrap-around bumpers (adds 1.75" [4.4cm] to overall length and depth)
- Wire baskets (13.81" x 11.62" x 3.87" [35.1cm x 29.5cm x 9.8cm])
- Laminate panels
- Fiberglass panels
- Lid locking device
- Special voltages (contact factory)voltages (consult factory)

NOTE: This equipment is intended for storage and /or display of pre-packaged or bottled products only.

Model SCF-32
shown with optional corner bumpers and casters

404A REFRIGERANT

The Delfield Company, 980 S. Isabella Rd., Mt. Pleasant, MI 48858, U.S.A. • (800) 733-8821 • Fax (800) 669-0619 • www.delfield.com

Delfield reserves the right to make changes in design or specifications without prior notice. ©2002 The Delfield Company. All rights reserved. Printed in U.S.A.

Free-Standing Self-Contained Ice Cream Dispenser

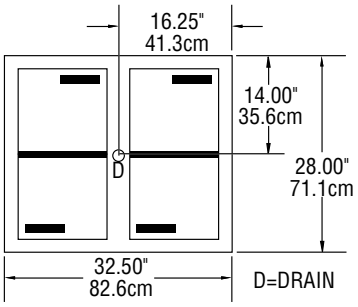

PLAN VIEW
MODEL SCF-32

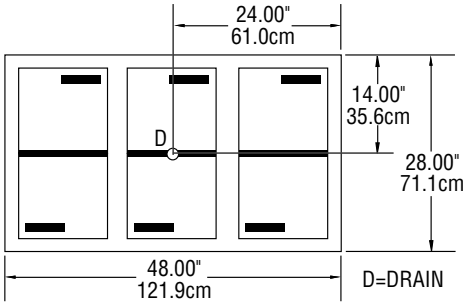

PLAN VIEW
MODEL SCF-48

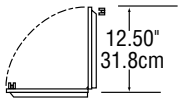

LID OPENING DETAIL
ALL SCF MODELS

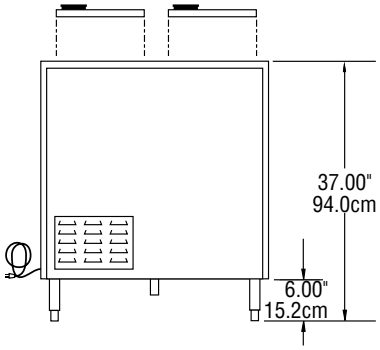

ELEVATION VIEW
MODEL SCF-32

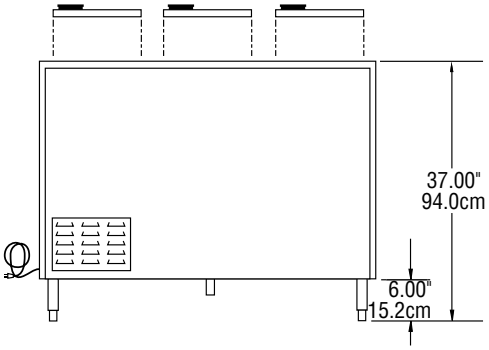

ELEVATION VIEW
MODEL SCF-48

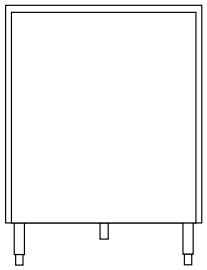

END VIEW
ALL SCF MODELS

Mechanical Data–Standard Unit

MODEL NUMBER	CAPACITY (3oz. ice-cream cups)	HORSEPOWER	AMPS	BTU LOAD	BTU CAPACITY	SHIP WEIGHT
SCF-32	300	1/4	6.0	710	930	334 lbs/ 152 kg
SCF-48	510	1/3	8.0	1040	1300	414 lbs/ 188 kg

The Delfield Company, 980 S. Isabella Rd., Mt. Pleasant, MI 48858, U.S.A. • (800) 733-8821 • Fax (800) 669-0619 • www.delfield.com
Delfield reserves the right to make changes in design or specifications without prior notice. ©2002 The Delfield Company. All rights reserved. Printed in U.S.A.
MSSCF 10/01