SECTION 2. PARTS INFORMATION

2-1. INTRODUCTION

This section identifies and lists the replaceable parts of the Henny Penny Multipurpose Holding Cabinets.

2-2. GENUINE PARTS

Use only genuine Henny Penny parts in your cabinet. Using a part of lesser quality or substitute design may result in cabinet damage or personal injury.

2-3. HOW TO ORDER

Once the part you want to order has been found in the Parts List, write down the following information:

1. From the Parts List:
(Sample)
Item Number 1
Part Number 51718
Description Gasket – Drawer

2. From the data plate:
(Sample)
Product Number 05882
Serial Number 0001
Voltage 120V

2-4. PRICES

Your independent Henny Penny distributor has a price parts list and will be glad to inform you of the cost of your parts order.

2-5. DELIVERY

Commonly replaced items are stocked by your independent Henny Penny distributor and will be sent out when your order is received. Other parts will be ordered by the distributor from Henny Penny Corporation. Normally, these will be sent to your distributor within three working days.

2-6. WARRANTY

All replacement parts (except lamps and fuses) are covered under warranty for 90 days against manufacturing defects and workmanship. If damage occurs during shipping, notify the carrier at once so that a claim may be properly filed. Refer to warranty on the front of this section for other rights and limitations.

2.7. RECOMMENDED SPARE PARTS FOR DISTRIBUTORS

Recommended replacement parts, stocked by your distributor, are indicated with √ in the parts lists. Please use care when ordering recommended parts, because all voltages and variations are marked. Distributors should order parts based upon common voltages and equipment sold in their territory.

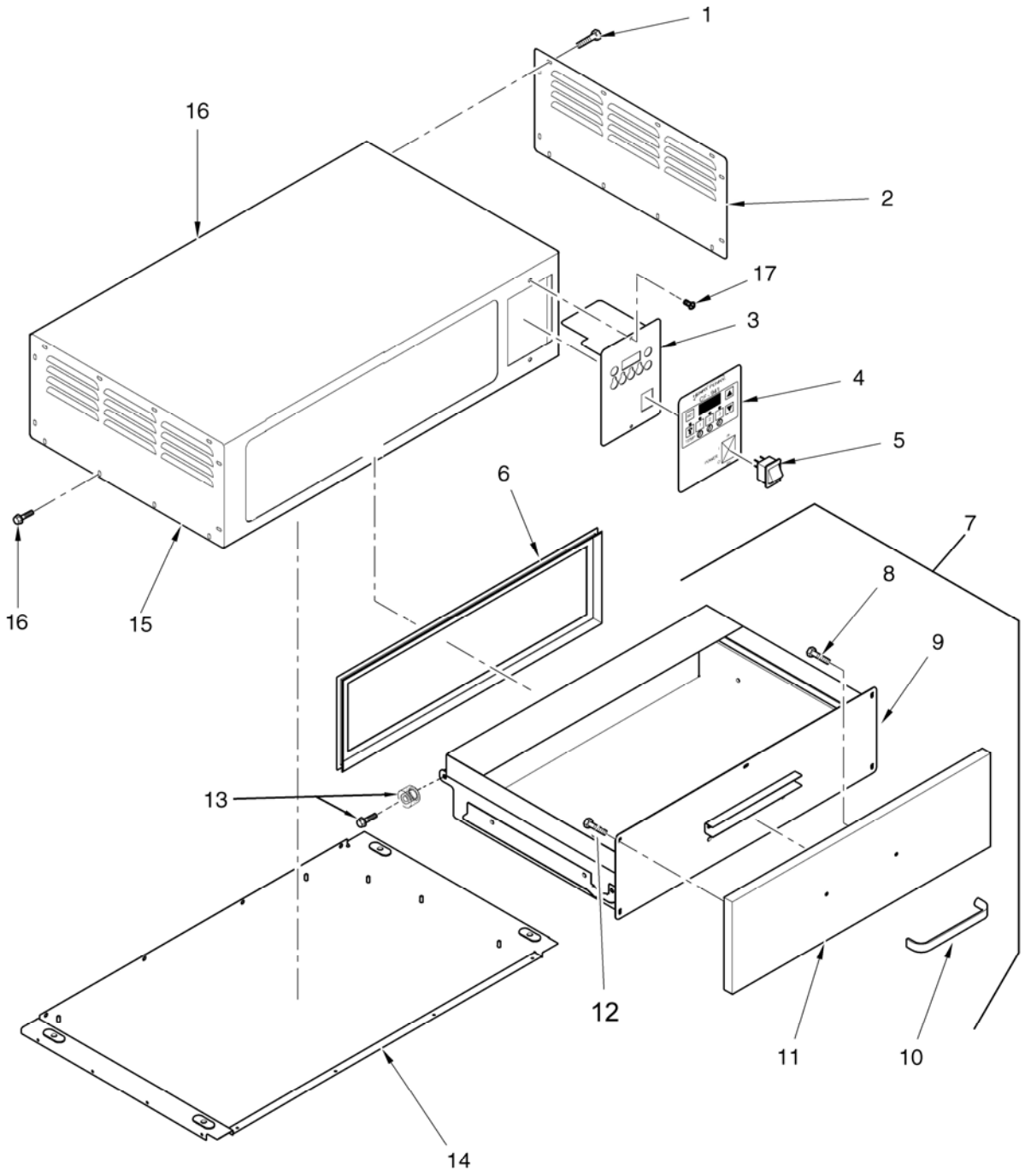

Figure 2-1. Drawer and Shell

FIG. & ITEM NO.	PART NO.	DESCRIPTION	Qty.
2-1		DRAWER AND SHELL	
1	SC01-034	SCREW	10
2	54432	PANEL - RH ACCESS	1
3	51545	CONTROL PANEL STUD ASSY.	1
4	51562	DECAL - CONTROL	1
√ 5	43768	POWER SWITCH	1
√ 6	51718	GASKET - DRAWER	1
7	52668	DRAWER ASSY.- NO VENT	1
8	SC01-144	. SCREW	2
9	52670	. WELD ASSY - DRAWER	1
10	31395	. DRAWER HANDLE	1
11	14716	. KIT - DRAWER FRONT	1
12	SC01-074	….. SCREW - #10-32 X ½ PH THD S	5
√ 13	14113	. BEARING KIT	1
14	52645	BASE ASSY.	1
15	54434	PANEL - ACCESS - LH	1
16	SC01-034	SCREW	10
17	52654	SHELL ASSY.	1
18*	52658	INSULATION - LINER - REAR - UPPER	1
19*	52659	INSULATION - LINER BOTTOM	1
20*	52660	INSULATION - SHELL - TOP	1
21*	53661	INSULATION - LEFT SIDE	1
22*	63835	INSULATION - LINER SIDE	1
23*	52663	INSULATION - RIGHT SIDE	1
24*	51471	INSULATION - LINER - REAR - LOWER	1
25*	51474	INSULATION - LINER - TOP	1
26*	52093	INSULATION - TOP - LINER - FRONT	1

√ recommended parts
*not shown

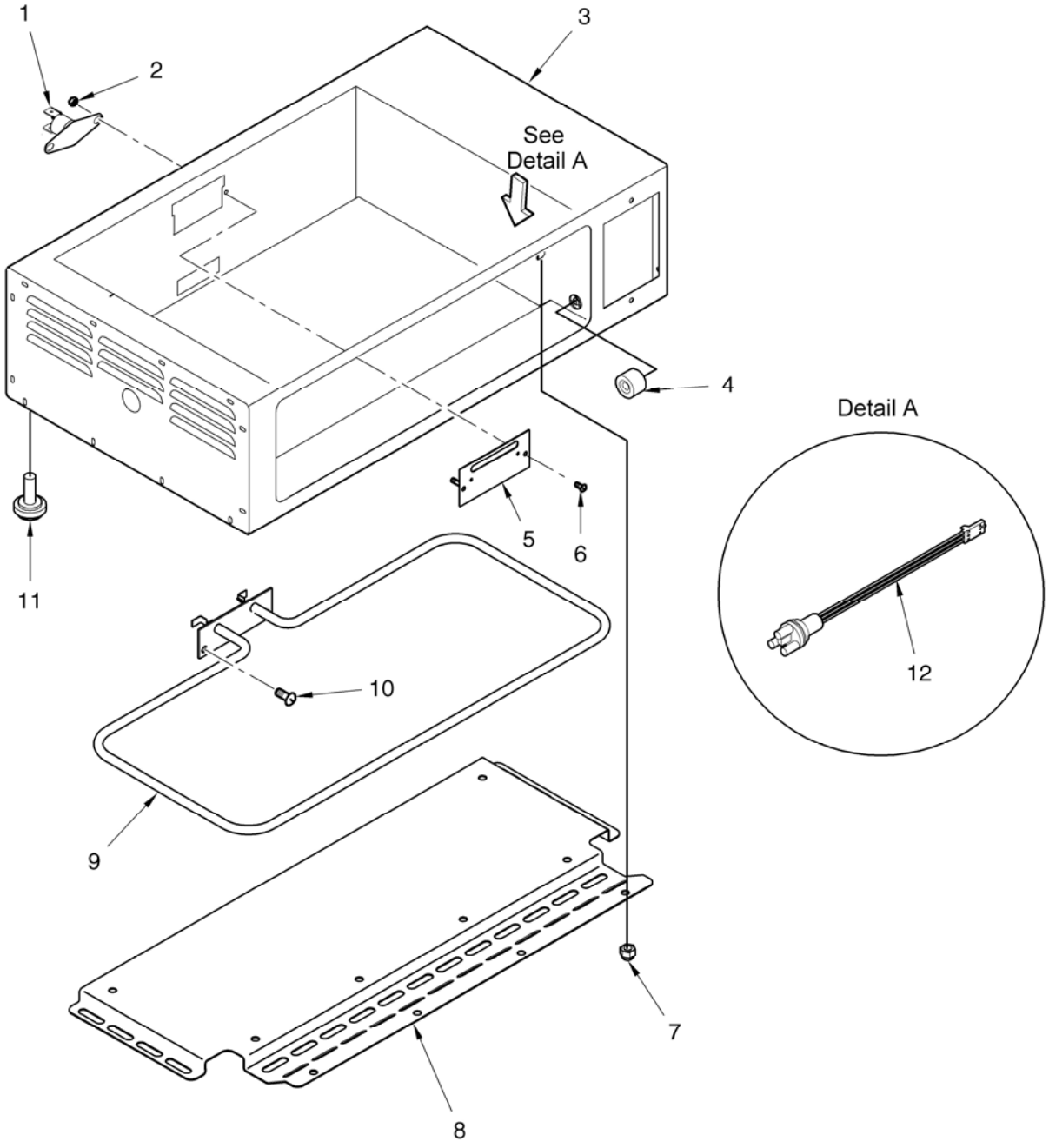

Figure 2-2. Heater and High Limit

FIG. & ITEM NO.	PART NO.	DESCRIPTION	Qty.
2-2		HEATER AND HIGH LIMIT	
√ 1	18201	HIGH LIMIT - 335º F (BEHIND HEATER PLATE)	1
2	NS02-005	NUT	2
3	54583	LINER WELD ASSY.	1
√ 4	14113	BEARING KIT	1
5	51951	BRACKET – HEATER (BEFORE SN: GA0407031)	1
6	SC01-034	SCREW	2
7	NS03-024	ACORN NUT	3
8	54465	DEFLECTOR – HEAT (BEFORE APRIL 1, 2001)	1
8	71001	DEFLECTOR – HEAT (APRIL 1, 2001 & AFTER)	1
√ 9	51796	HEATER - 475 W. - 120 V.	1
10	SC02-041	SCREW	2
11	26411	FOOT	4
√ 12	52100	TEMPERATURE SENSOR ASSY.	1
13*	NS02-002	NUT	4
14*	05031	1/3 SIZE PAN	2
15*	05208	1/6 SIZE PAN	2
16*	44341	PAN INSERT - 1/3 SIZE	2
17*	48001	PAN INSERT - 1/6 SIZE	2

√ recommended parts
*not shown

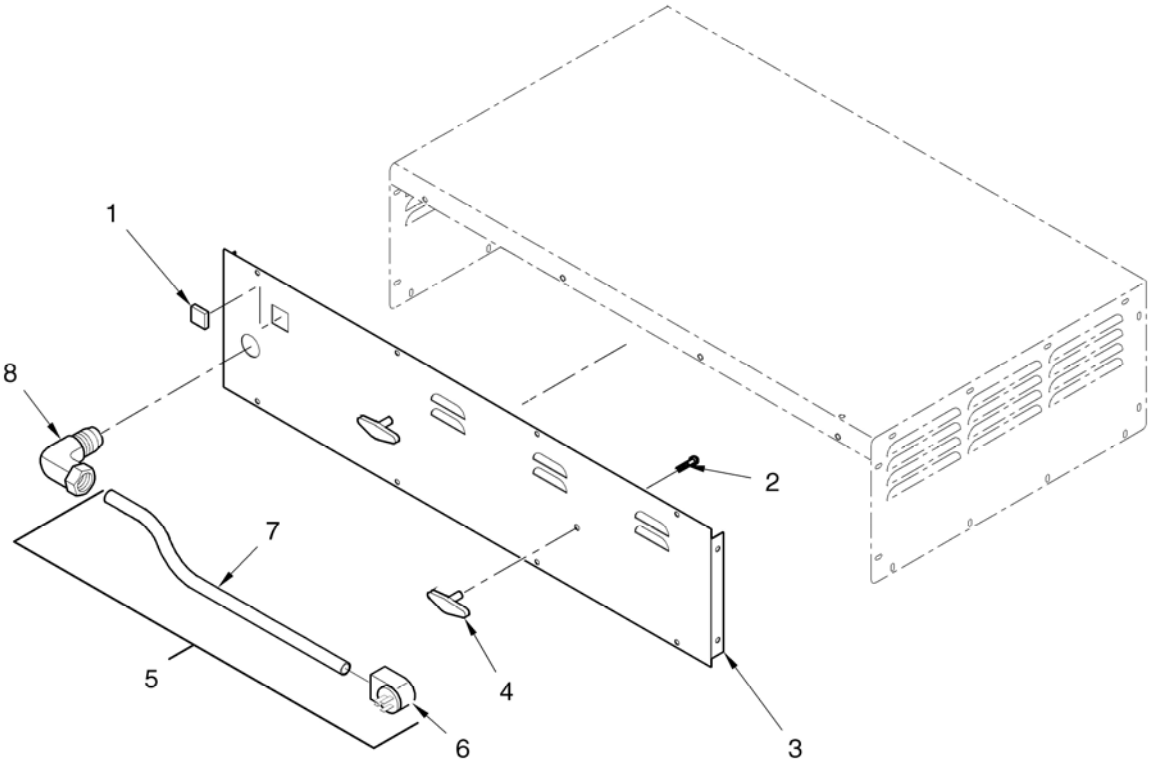

Figure 2-3. Rear Panel

FIG. & ITEM NO.	PART NO.	DESCRIPTION	Qty.
2-3		REAR PANEL	
1	MS01-197	RECEPTACLE - NEMA 5-15 R	1
2	SC01-172	SCREW	2
3	54443	PANEL - REAR ACCESS	1
4	27645	KNOB, CORD WRAP	2
5	54502	POWER CORD ASSY.	1
6	40298	. PLUG - ANGLED - 125 V.- 15 AMP	1
7	54501	. POWER CORD	1
8	27639	STRAIN RELIEF	1

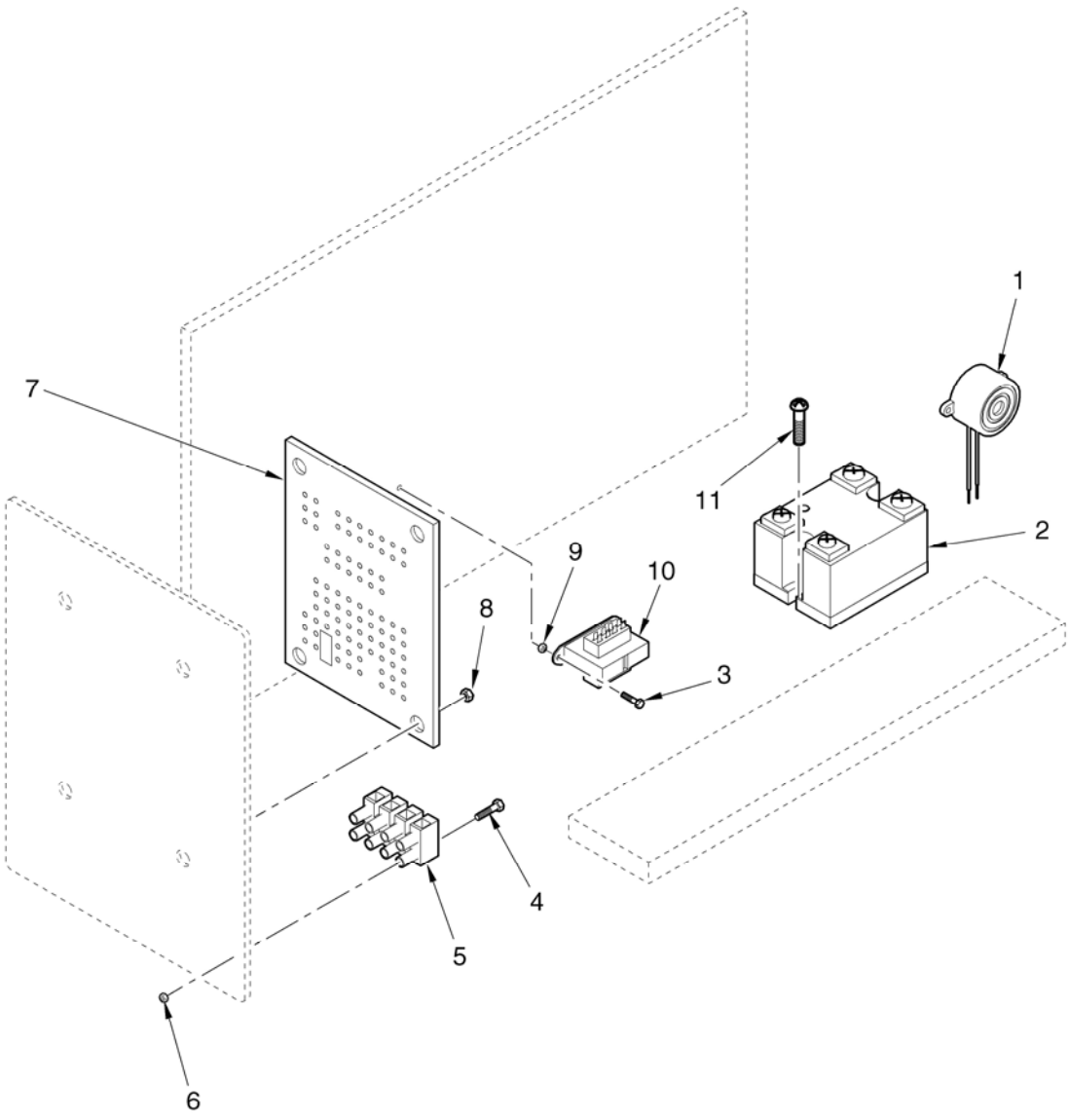

Figure 2-4. Electrical Parts

FIG. & ITEM NO.	PART NO.	DESCRIPTION	Qty.
2-4		ELECTRICAL PARTS	
√ 1	52664	BUZZER	1
√ 2	40645	RELAY	1
3	SC01-034	SCREW	2
4	SC01-053	SCREW	3
5	32871	TERMINAL BLOCK	1
6	NS02-007	NUT	3
√ 7	51103RB	PC BOARD 1	
8	NS02-005	NUT	4
9	NS02-007	NUT	2
√ 10	30978	TRANSFORMER - 12VAC	1
11	SC04-003	SCREW	2

√ recommended parts
*not shown