PROJECT	QUANTITY	ITEM NO

Open fryers

MODEL **OFG-322** 2-well gas

OFG-322 two-well gas open fryer

General Information

Henny Penny open fryers offer high-volume, integral multi-well frying with programmable operation, oil management functions and fast, easy filtration.

Henny Penny's unique heat-exchange design produces extremely fast temperature recovery—typically in seconds—while requiring less than 2 kW per gallon of oil or shortening. That level of efficiency has earned the Henny Penny 320 series open fryer the ENERGY STAR® mark.

Fast recovery also translates into frying program profits with higher throughput, lower energy costs and longer frying oil life that comes from reduced temperature fluctuations.

A built-in filtration system filters hot frying oil in under 4 minutes, with no separate pumps or pans required. Hot filtered oil returns directly to each well. Frequent filtering extends frying oil life, improves product quality and reduces oil costs.

The OFG-322 open fryer features two integral fry wells equipped for half basket or full basket operation. Henny Penny's heavy-duty stainless steel rectangular fry pots promote fast even cooking and come with a 7-year warranty—the best in the business.

The **COMPUTRON™ 8000** control provides fully automatic, programmable operation, as well as energy-saving, filtration and cook management features.

The **COMPUTRON™ 1000** control offers programmability in a simple, easy to use digital control panel with LED display.

Standard Features

- Stainless steel construction for easy-cleaning and long life.
- 2 heavy-duty stainless steel rectangular fry pots with 7-year warranty.
- **COMPUTRON™ 8000** control (additional charge.)
  - 12 programmable cook cycles
  - Melt mode
  - Idle mode
  - Load compensation
  - Proportional control
  - Optional filter prompt and customizable filter tracking
  - Clean-out mode
  - 16-character digital display with multiple language settings.
- **COMPUTRON™ 1000** simple digital control
  - Programmable
  - LED Time/Temp display
  - Simple UP/DOWN arrows
- Built-in filtration.
  - ☐ Single well/sequential filter pan
  - ☐ Two-well filter pan
- Fry pot protection system.
- Easy basket set and release.
- Specially designed cold zone prevents scorching.
- 4 heavy-duty casters, 2 locking.

Accessories shipped with unit

- Fry baskets—please select one
  - ☐ 2 full baskets
  - ☐ 1 full and 2 half baskets
  - ☐ 4 half baskets
- 2 basket supports

Accessories and options available separately

☐ Direct Connect shortening disposal
☐ Shortening shuttle
☐ Filter rinse hose
☐ Fry well covers

☐ APPROVED	☐ APPROVED AS NOTED	☐ RESUBMIT
AUTHORIZED SIGNATURE	DATE	

HENNY PENNY
Engineered to Last™

© 2006 Henny Penny Corporation, Eaton, OH 45320 USA Revised 02/25/11

PROJECT	ITEM NO

Open fryers

MODEL **OFG-322** 2-well gas

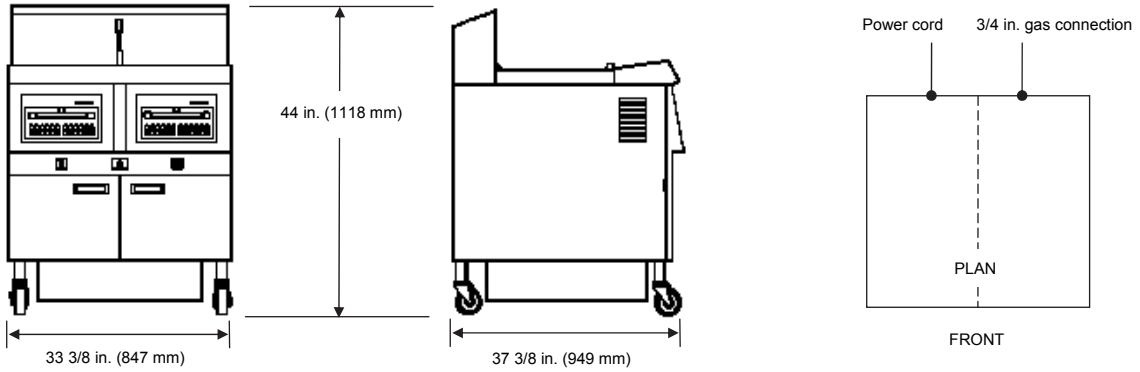

Dimensions
Width 33 3/8 in. (847 mm)
Depth 37 3/8 in. (949 mm)
Height 44 in. (1118 mm)

Required clearances
Sides: 4 in. (102 mm)
Back: 4 in. (102 mm)
Front: 30 in. (762 mm) filter pan removal

Crated dimensions
Length 40 in. (1016 mm)
Depth 39 in. (991 mm)
Height 54 in. (1372 mm)
Volume 48.8 cu. ft. (1.38 m³)

Net weight N/A
Crated weight: 467 lbs. (212 kg)

Heating
Natural gas or liquid petroleum
4 burners,170,000 BTU/hr (50 kW)
3/4 in. connection

Oil capacity:
32 qts. or 65 lbs. (30 liters or 30 kg) per vat

Electrical

Volts	Phase	Cycle/Hz	Watts	Amps	Wire
120	1	60	N/A	12.0	2+G
230	1	50	N/A	2.5	1NG
220-240	1	50	N/A	12.0	2+NG

Laboratory certifications

Bidding Specifications

- Provide Henny Penny model OFG-322 two-well gas open fryer with available built-in filtration system.
- Unit shall incorporate either **COMPUTRON™ 1000** simple digital controls or **COMPUTRON™ 8000** control system (additional charge.)
- Materials—cabinet, deck, exhaust stack, filter drain pan and various fittings are stainless steel. Fry pots are heavy duty stainless steel.
- Unit shall incorporate high-efficiency heat-exchange design for extremely fast recovery.
- Unit qualifies for the ENERGY STAR® mark.
- Unit's controller provides for programmable or manual operation with press-key controls and LED digital display. **COMPUTRON™ 8000** control offers idle and melt modes, load compensation, filtration tracking and 7-day history.
- Unit shall include 4 heavy-duty casters, 2 locking.
- Unit ships with stainless steel ***Max*** filtration screen and 2 PHT filter envelopes. All units ship with choice of 2 full baskets, 1 full and 2 half baskets, or 4 half baskets.

Continuing product improvement may subject specifications to change without notice.

Henny Penny Corporation
PO Box 60 Eaton OH 45320 USA

+1 937 456.8400 800 417.8417
+1 937 456.8434 Fax 800 417.8434 Fax

www.hennypenny.com

© 2006 Henny Penny Corporation, Eaton, OH 45320 USA Revised 02/25/11