SECTION 2. INSTALLATION

2-1. INTRODUCTION

This section provides the installation and unpacking instructions for the Henny Penny PFE-590.

NOTICE

Installation of this unit should be performed only by a qualified service technician.

Do not puncture the fryer with any objects such as drills or screws as electrical shock or component damage could result.

2-2. UNPACKING INSTRUCTIONS

NOTICE

Any shipping damage should be noted in the presence of the delivery agent and signed prior to his or her departure.

1. Cut and remove the plastic bands from the main box.

2. Remove the box lid and lift the main box off the fryer.

3. Remove corner packing supports (4).

4. Cut the stretch film from around the carrier/rack box and remove it from the top of the fryer lid.

5. Cut and remove the metal bands holding the fryer to the pallet.

WARNING

All counterweights must be loaded before unlatching lid, or personal injury could result.

6. Remove the fryer from the pallet.

Take care when moving the fryer to prevent personal injury. The fryer weighs approximately 758 lbs. (344 Kg).

2-2. UNPACKING INSTRUCTIONS (Continued)

7. Remove the counterweights from the pallet, which are strapped to the pallet, under the fryer.

CAUTION

Do not drop. The counterweights weigh approximately 18 lbs. (8.1 kg.) each. Handle with care, or personal injury could result.

8. Remove rear service cover.

9. Load the seven weights into the counterweight assembly. See page 2-4.

10. Replace rear service cover.

WARNING

To avoid personal injury and assure safe operation of unit, rear service cover must be in place.

11. Cut warning tags from the lid assembly. The lid may now be unlatched.

12. Remove the accessories from inside the filter drain pan.

13. Prepare the deadweight valve for operation

NOTICE

The metal shipping support is placed within the deadweight assembly housing to protect the deadweight orifice and deadweight during shipment. This support must be removed prior to installation and start-up.

A. Unscrew the deadweight cap.
B. Remove the deadweight.
C. Remove and discard the metal packing support.
D. Clean the deadweight orifice with a dry cloth.
E. Carefully place deadweight over deadweight orifice. Replace deadweight cap, finger tight.

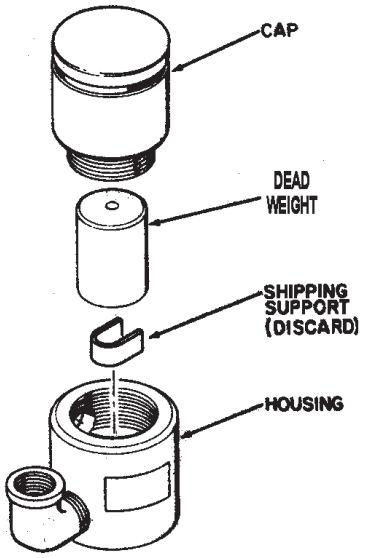

13. Remove the protective paper from the fryer cabinet. Clean exterior surface with a damp cloth.

Optional Ramp Unloading

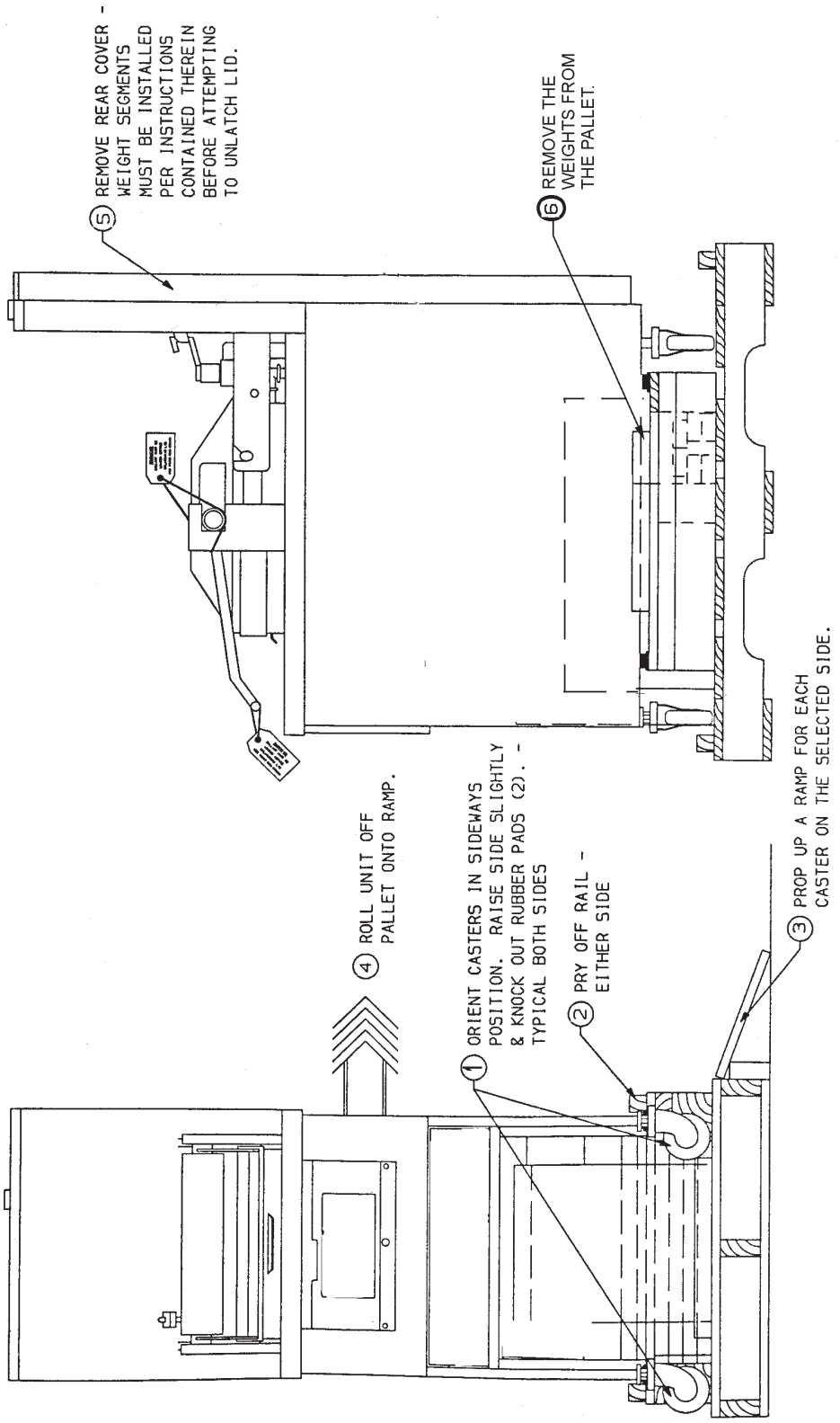

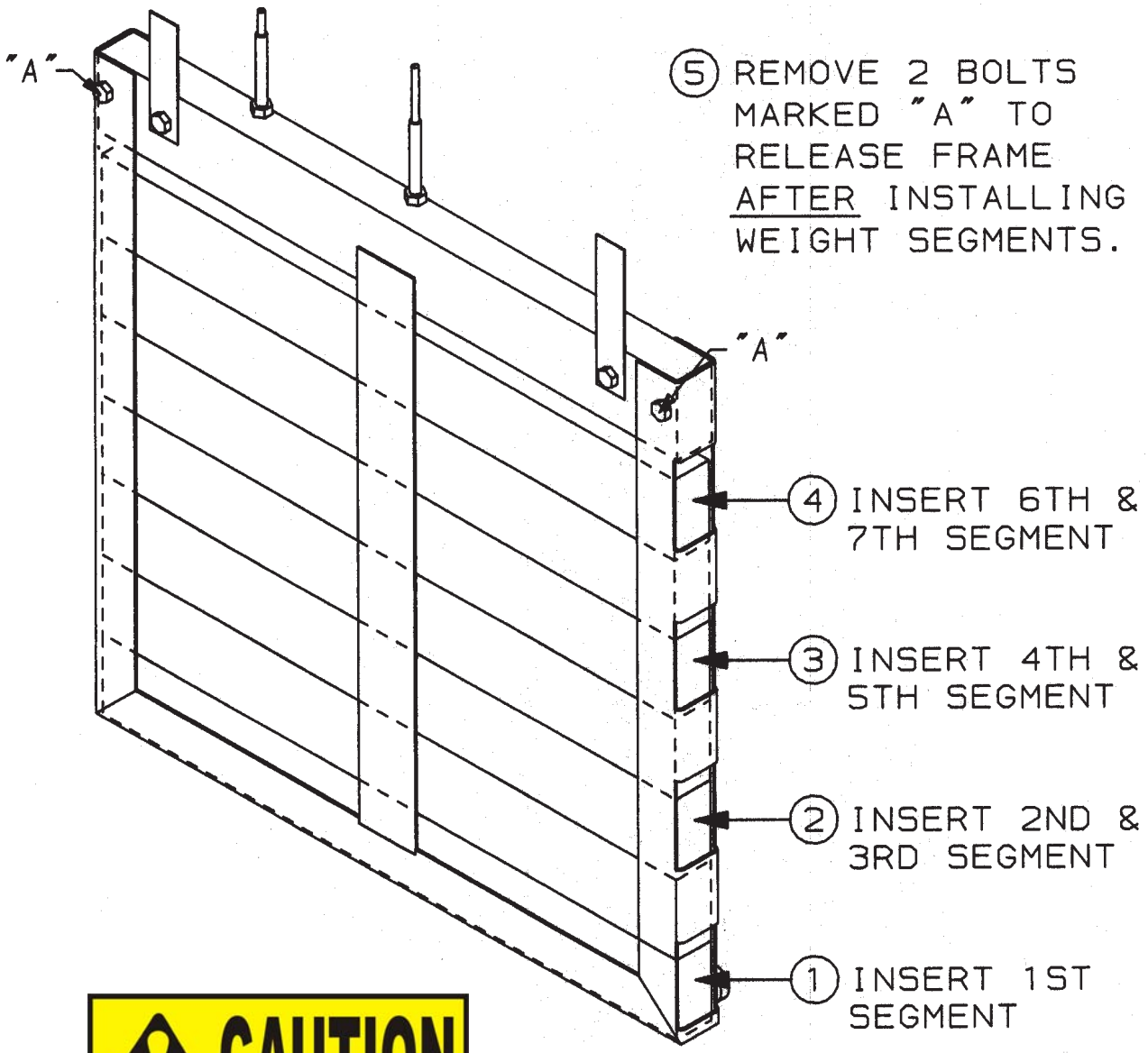

CAUTION

* EACH WEIGHT SEGMENT WEIGHS APPROXIMATELY 18 LBS. (8.1 KG) - HANDLE WITH CARE.
* ALL SEGMENTS ARE IDENTICAL.
* ALL SEGMENTS MUST BE INSTALLED AND SECURED IN THE FRAME BEFORE ATTEMPTING TO UNLATCH LID.

2-3. SELECTING THE LOCATION

The proper location of the fryer is very important for operation, speed, and convenience. Choose a location which will provide easy loading and unloading without interfering with the final assembly of food orders. Operators have found that frying from raw to finish, and holding the product in a warmer provides fast continuous service. Landing or dumping tables should be provided next to at least one side of the fryer. Keep in mind the best efficiency will be obtained by a straight line operation, i.e. raw in one side and finish out the other side. Order assembly can be moved away with only a slight loss of efficiency. To properly service the fryer, 24 inches (60.96 cm) of clearance is needed on all sides of the fryer. Access for servicing can be attained by removing a side panel.

CAUTION
FIRE HAZARD

To avoid fire and ruined supplies, the area under the fryer should not be used to store supplies.

WARNING
BURN RISK

To prevent severe burns from splashing hot shortening, position and install fryer to prevent tipping or movement. Restraining ties may be used for stabilization.

2-4. LEVELING THE FRYER

For proper operation, level the fryer from side to side and front to back, using level on the flat areas around the frypot collar.

DANGER

FAILURE TO FOLLOW THESE LEVELING INSTRUCTIONS CAN RESULT IN SHORTENING OVERFLOWING THE FRYPOT WHICH COULD CAUSE SERIOUS BURNS, PERSONAL INJURY, FIRE AND/OR PROPERTY DAMAGE.

2-5. VENTILATION OF FRYER

The fryer should be located with provision for venting into adequate exhaust hood or ventilation system. This is essential to permit efficient removal of steam exhaust and frying odors. Special precaution must be taken in designing an exhaust canopy to avoid interference with the operation of the fryer. We recommend you consult a local ventilation or heating company to help in designing an adequate system.

NOTICE

Ventilation must conform to local, state, and national codes. Consult your local fire department or building authorities.

2-6. ELECTRICAL REQUIREMENTS

The electric fryer requires 208 or 240 volt, three phase, 50/60 Hertz service. The power cord may be already attached to the fryer, or provided at installation. Check the data plate mounted just above the lid, on the left side of the back shroud, to determine the correct power supply.

This fryer must be adequately and safely grounded (earthed) or electrical shock could result. Refer to local electrical codes for correct grounding (earthing) procedures or in absence of local codes, with The National Electrical Code, ANSI/NFPA No. 70-(the current edition). In Canada, all electrical connections are to be made in accordance with CSA C22.1, Canadian Electrical Code Part 1, and/or local codes.

To avoid electrical shock, this appliance must be equipped with an external circuit breaker which will disconnect all ungrounded (unearthed) conductors. The main power switch on this appliance does not disconnect all line conductors.

A separate disconnect switch with proper capacity fuses or breakers must be installed at a convenient location between the fryer and the power source. It should be an insulated copper conductor rated for 600 volts and 90° C. For runs longer than 50 feet (15.24 m), use the next larger wire size.

2-7. INTERNATIONAL ELECTRICAL REQUIREMENTS

Units being used outside the United States may not be shipped with the power cord attached to the unit because of the different wiring codes. The fryers are available from the factory wired for 208, 240, 380 and 415 volts, 3 phase, 50 Hertz service. A terminal block is mounted inside the fryer for the cable wiring. A decal on the inside of the right side panel will help in the wiring of the unit.

NOTICE

CE units require a minimum wire size of 4mm to be wired to the terminal block. If a flexible power cord is used, it must be HO7RN type.

To install the power cord, follow these procedures:

1. Remove the right side panel of the unit.

2. Install the cord, with a strain relief, to the junction box.

3. Attach the wires to the terminal block according to the wiring diagram on the side panel.

4. Pull the slack out of the cord and thread it down through the the clamp on the frame, at the rear, left leg of fryer. Then run the cable under the frame and out the rear of the fryer, so it doesn't interfere with the filter drain pan.

WARNING

The filter drain pan must be as far back under fryer as it will go, and the cover in place. Be sure the hole in the cover lines up with the drain before opening the drain. Failure to follow these instructions causes splashing of shortening and could result in personal injury.

5. Wiring the fryer is now complete.

2-7. INTERNATIONAL ELECTRICAL REQUIREMENTS (Continued)

NOTICE

- The supply power cords shall be oil-resistant, sheathed flexible cable, no lighter than ordinary polychloroprene or other equivalent synthetic elastomer-sheathed cord.

- It is recommended that a 30 mA rated protective device such as a residual current circuit breaker (RCCB), or ground fault circuit interrupter (GFCI), be used on the fryer circuit.

(FOR EQUIPMENT WITH CE MARK ONLY!)
To prevent electric shock hazard this appliance must be bonded to other appliances or touchable metal surfaces in close proximity to this appliance with an equipotential bonding conductor. This appliance is equipped with an equipotential lug for this purpose. The equipotential lug is marked with the following symbol  **.**