Hoshizaki America, Inc.

Self-Contained Cuber

Models
AM-50BAE
AM-50BAE-DS
AM-50BAE-AD
AM-50BAE-ADDS

"A Superior Degree of Reliability"

www.hoshizaki.com

PARTS LIST

Number: 71211
Issued: 9-23-2002
Revised: 1-25-2007

CONTENTS

Auxiliary Codes 3
Note About Ordering Parts 3
Material Abbreviations 4
A. Ice Cuber Assembly 5
AM-50BAE, AM-50BAE-DS, AM-50BAE-AD, AM-50BAE-ADDS 5
B. Refrigeration Assembly 9
AM-50BAE, AM-50BAE-DS, AM-50BAE-AD, AM-50BAE-ADDS 9
C. Ice Making Mechanism Assembly 12
AM-50BAE, AM-50BAE-DS, AM-50BAE-AD, AM-50BAE-ADDS 12
D. Control Box Assembly 14
AM-50BAE, AM-50BAE-DS, AM-50BAE-AD, AM-50BAE-ADDS 14
E. Door Assembly 15
AM-50BAE, AM-50BAE-AD 15
AM-50BAE-DS, AM-50BAE-ADDS 16
F. Water Circuit Assembly 17
AM-50BAE, AM-50BAE-DS, AM-50BAE-AD, AM-50BAE-ADDS 17
G. Thermostat Assembly 18
AM-50BAE, AM-50BAE-DS, AM-50BAE-AD, AM-50BAE-ADDS 18
H. Label Location 19
AM-50BAE, AM-50BAE-DS, AM-50BAE-AD, AM-50BAE-ADDS 19
J. Accessories 20
AM-50BAE, AM-50BAE-AD 20
AM-50BAE-DS, AM-50BAE-ADDS 21

Auxiliary Codes

AM-50BAE	M-0	August 2002
	N-1	December 2002
	N-2	September 2003
	P-0	December 2003
	P-1	June 2004
	Q-0	December 2004
	R-0	December 2005
	R-1	April 2006
	R-2	May 2006
AM-50BAE-DS	R-0	March 2006
AM-50BAE-AD	N-1	March 2003
	P-0	March 2004
	P-1	May 2004
	Q-0	February 2005
	R-0	December 2005
	R-1	April 2006
	R-2	May 2006
AM-50BAE-ADDS	R-0	June 2006

Auxiliary Code Breakdown

K-0

Designates the year. "K" indicates the year 2000. Years progress or regress in alphabetical order. "J" is 1999, "L" is 2001, "M" is 2002, and so on. The letters "I" and "O" were skipped.

Designates significant part changes within the same year for this model. Base is 0 and this number advances for each change.

Example: P-1

"P" indicates 2004.

"1" indicates the first significant part change for 2004.

Note About Ordering Parts

Most assemblies cannot be ordered as complete units; parts in the assemblies generally must be ordered separately.

Material Abbreviations

ALUMINUM

AL	=	Aluminum

COPPER

CU	=	Copper

PLASTIC

ABS	=	Acrylonitrile -butadiene - styrene
AC	=	Polyacetal
EVA	=	Ethylene vinyl acetate
PA	=	Polyamide = Nylon
PC	=	Polycarbonate
PE	=	Polyethylene
PES	=	Polyester
PETP	=	Polyethylene terephthalate = Tetlon
PP	=	Polypropylene
PS	=	Polystyrene
PTFE	=	Polytetrafluoroethylene = Teflon
PUR	=	Polyurethane
PVC	=	Polyvinyl chloride

RUBBER

VN	=	Vinyl Nitrile
EPDM	=	EP rubber
NBR	=	Nitrile butadiene rubber
NR	=	Natural rubber
NP	=	Neoprene
SI.R	=	Silicone rubber
SY.R	=	Synthetic rubber
EPH	=	Epichlorohydrin

STEEL

GS	=	Galvanized steel
SS	=	Stainless steel
PS	=	Plated steel
PAS	=	Primed steel

A. Ice Cuber Assembly

AM-50BAE, AM-50BAE-DS, AM-50BAE-AD, AM-50BAE-ADDS

M-0, N-1, N-2, P-0, P-1, Q-0, R-0, R-1, R-2

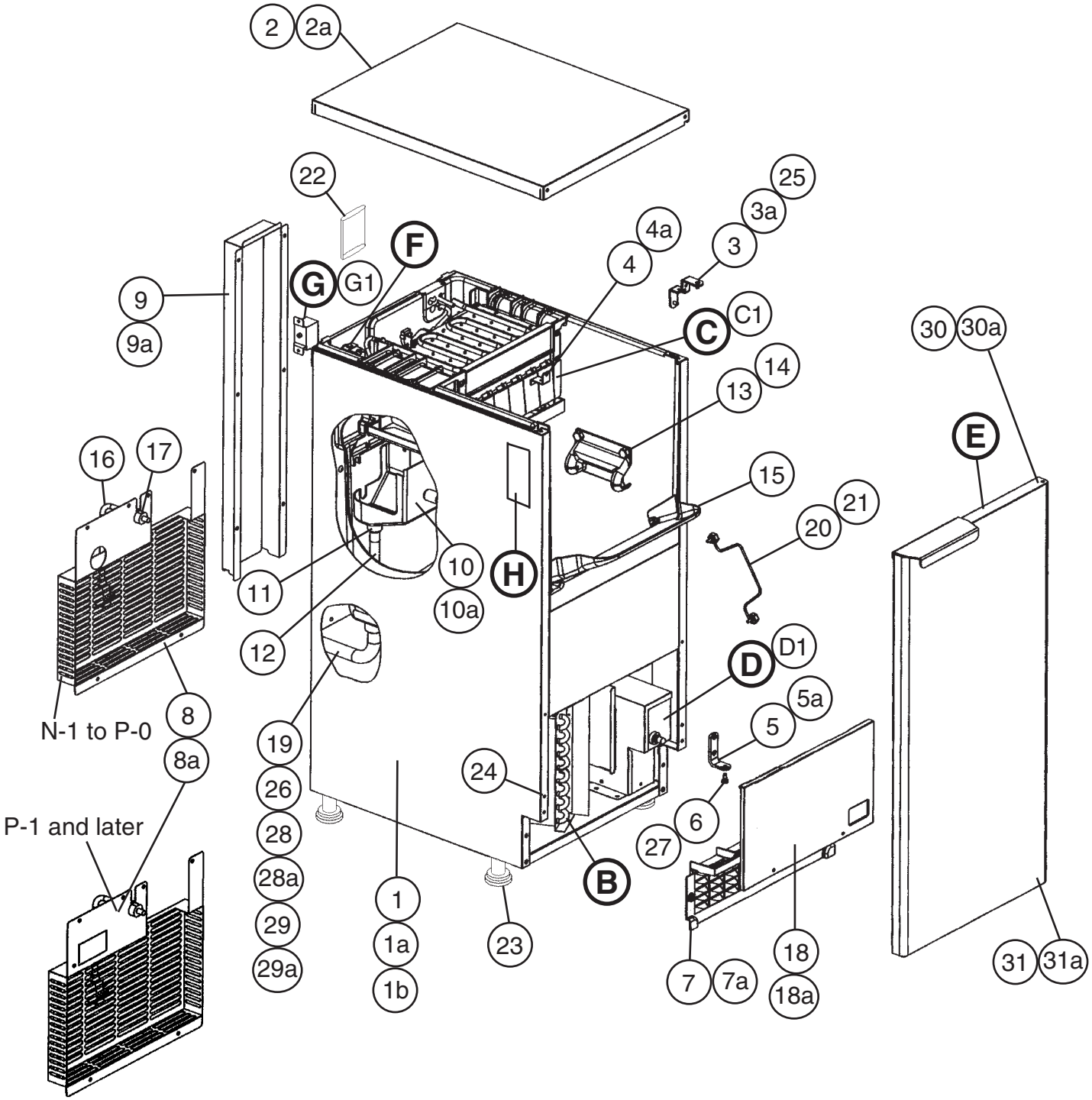

Title: **A. Ice Cuber Assembly** Model: **AM-50BAE, AM-50BAE-DS, AM-50BAE-AD, AM-50BAE-ADDS**

Index No.	Description	Material or Model Number	Part Number	Required Number								
				M-0	N-1 N-2	P-0	P-1	Q-0	R-0	R-1 R-2		
B	Refrigeration Assembly	**AM-50BAE AM-50BAE-DS**	1H2643A01	1	1	1	1	1	1	1		
		AM-50BAE-AD AM-50BAE-ADDS	1H2643A02		1	1	1	1	1	1		
C	Ice Making Mechanism Assembly	-	1H2644A01	1	1	1	1	1	1	1		
C1	T2 Screw	4×16, SS	7P32-0416	4	4	4	4	4	4	4		
D	Control Box Assembly	-	2H5583A01	1	1	1	1	1	1	1		
D1	Hex Bolt Sw	5×10, SS	7B0230510	2	2	2	2	2	2	2		
E	Door Assembly	**AM-50BAE**	2H5585A01	1	1	1	1	1	1	1		
		AM-50BAE-DS	2A3683A01						1	1		
		AM-50BAE-AD	2H5585A03		1	1	1	1	1	1		
		AM-50BAE-ADDS	2A3683A02						1	1		
F	Water Circuit Assembly	-	3X6442A01	1	1	1	1	1	1	1		
G	Thermostat Assembly	-	3A2561A01	1	1	1	1	1	1	1		
G1	T2 Screw	4×8	7C31-0408	2	2	2	2	2	2	2		
H	Label Location	**AM-50BAE**	3X6443A01	1	1	1	1	-				
			3X6443A03					1	-			
			3A3782A03						1	1		
		AM-50BAE-DS	3A3782A01						1	1		
		AM-50BAE-AD	3X6443A02		1	1	1	-				
			3X6443A04					1	-			
			3A3782A04						1	1		
		AM-50BAE-ADDS	3A3782A02						1	1		
1	Body	**AM-50BAE AM-50BAE-DS**	1H2639G01	1	1	1	1	1	1	1		
		AM-50BAE-AD AM-50BAE-ADDS SS	1H2639G02		1	1	1	1	1	1		
1a	Hex T2 Screw	6×16	7B03-0616	4	4	4	4	4	4	4		
1b	Tooth Washer	6, SS	7R22-0600	2	2	2	2	2	2	2		
2	Top Panel	-	2H5584G01	1	-							
			2A2849G01		1	1	1	1	1	-		
			2A3776G01							1		
2a	Truss Head Screw	4×8, SS	7C32-0408	2	2	2	2	2	2	2		
3	Hinge (A)	**AM-50BAE AM-50BAE-AD**	4Y0194G01	1	1	1	1	1	1	-		
			4A3997G01							1		
		AM-50BAE-DS AM-50BAE-ADDS SS	4A3997G02						1	1		
3a	Truss Head Screw	4×10, SS	7C32-0410	1	1	1	1	1	1	1		
4	Brace - Top	SS	4Y0193-01	1	1	1	1	1	1	1		
4a	Truss Head Screw	4×10, SS	7C32-0410	1	1	1	1	1	1	1		

Title: **A. Ice Cuber Assembly** Model: **AM-50BAE, AM-50BAE-DS, AM-50BAE-AD, AM-50BAE-ADDS**												
				Required Number								
Index No.	Description	Material or Model Number	Part Number	M-0	N-1 N-2	P-0	P-1	Q-0	R-0	R-1 R-2		
5	Hinge (B)	**AM-50BAE AM-50BAE-AD**	4Y0192-01	1	1	1	1	1	1	1		
		AM-50BAE-DS AM-50BAE-ADDS SS	4A3980-01						1	1		
5a	Flat Head Screw	4×8, SS	7C22-0408	2	2	2	2	2	2	2		
6	Hinge - Stop Pin	SS	4A2180-01	1	1	1	1	1	1	1		
7	Louver	PC	2H5560-01	1	1	1	1	1	1	1		
7a	Truss Head Screw	4×10, SS	7C32-0410	2	2	2	2	2	2	2		
8	Rear Panel	**AM-50BAE AM-50BAE-DS**	2H5575-01	1	-							
			2A2895-01		1	1	-					
			2A3304-01				1	1	1	1		
		AM-50BAE-AD AM-50BAE-ADDS GS	2A2881-01		1	1	-					
			2A3305-01				1	1	1	1		
8a	T2 Screw	4×8	7P31-0408	4	4	4	4	5	5	5		
9	Cover – Pipe	GS	3X6432-01	1	1	1	1	1	1	1		
9a	T2 Screw	4×8	7P31-0408	6	6	6	6	6	6	6		
10	Drain Pan	ABS	2H4534-01	1	1	1	1	1	1	1		
10a	T2 Screw	4×10, SS	7P32-0410	1	1	1	1	1	1	1		
11	Drain Tube	SI. R	4H2585-01	1	1	1	1	1	1	1		
12	Drain Pipe	ABS	4Y0211-01	1	1	1	1	1	1	1		
13	Holder – Thermo	PP	3X6381-01	1	1	1	1	1	1	1		
14	Thumbscrew	-	415949G09	2	2	2	2	2	-			
			415949G10						2	2		
15	Slope	ABS	3X6383-01	1	1	1	1	1	1	1		
16	Power Supply Cord	-	4A2860-01	1	1	1	1	1	1	1		
17	Bushing	SR-71C-2	420472-02	1	1	1	1	1	1	1		
18	Front – Louver	**AM-50BAE AM-50BAE-DS**	3X6433-01	1	1	1	1	1	1	1		
		AM-50BAE-AD AM-50BAE-ADDS SS	3X6433-02		1	1	1	1	1	1		
18a	T2 Screw	4×10, SS	7P32-0410	2	2	2	2	2	2	2		
19	Reservoir Hose	EPDM	4A1165-07	1	1	1	-					
			4A1165-08				1	1	1	1		
20	Holder – Scoop	SS	4Y0213-01	1	1	1	1	1	1	1		
21	Thumbscrew	-	415949G09	2	2	2	2	2	-			
			415949G10						2	2		
22	Bag	-	4X1559-03	2	2	2	2	2	3	3		
23	Leg	-	4A2751-02	4	-							
			4A2966-01		4	4	4	4	4	4		
24	Truss Head Screw	4×10, SS	7C32-0410	2	2	2	2	2	2	2		
25	Bracket/Hinge (A)	-	4A2996-01		1	1	1	1	1	1		
26	Hose Clamp	-	4A2017-09			1	2	2	2	2		
27	Tooth Washer	6, SS	7R22-0600	1	1	1	1	1	1	1		

Title: **A. Ice Cuber Assembly** Model: **AM-50BAE, AM-50BAE-DS, AM-50BAE-AD, AM-50BAE-ADDS**												
				Required Number								
Index No.	Description	Material or Model Number	Part Number	M-0	N-1 N-2	P-0	P-1	Q-0	R-0	R-1 R-2		
28	Fitting – Drain	-	4A3488G01				1	1	1	1		
28a	T2 Screw	4×8	7P31-0408				2	2	2	2		
29	Bracket – Drain	-	4A3487-01				1	1	1	1		
29a	T2 Screw	4×8	7P31-0408				2	2	2	2		
30	Hinge (C) Assembly (UR, LL) Includes Bushing 417486-01	**AM-50BAE-DS** **AM-50BAE-ADDS** SS	4A3983G01						1	1		
30a	Flat Head Screw	**AM-50BAE-DS** **AM-50BAE-ADDS** 4×12, SS	7C22-0412						2	2		
31	Hinge (C) Assembly (LR, UL) Includes Bushing 417486-01	**AM-50BAE-DS** **AM-50BAE-ADDS** SS	4A3983G02						1	1		
31a	Flat Head Screw	**AM-50BAE-DS** **AM-50BAE-ADDS** 4×12, SS	7C22-0412						2	2		

B. Refrigeration Assembly

AM-50BAE, AM-50BAE-DS, AM-50BAE-AD, AM-50BAE-ADDS

M-0, N-1, N-2, P-0, P-1, Q-0, R-0, R-1, R-2

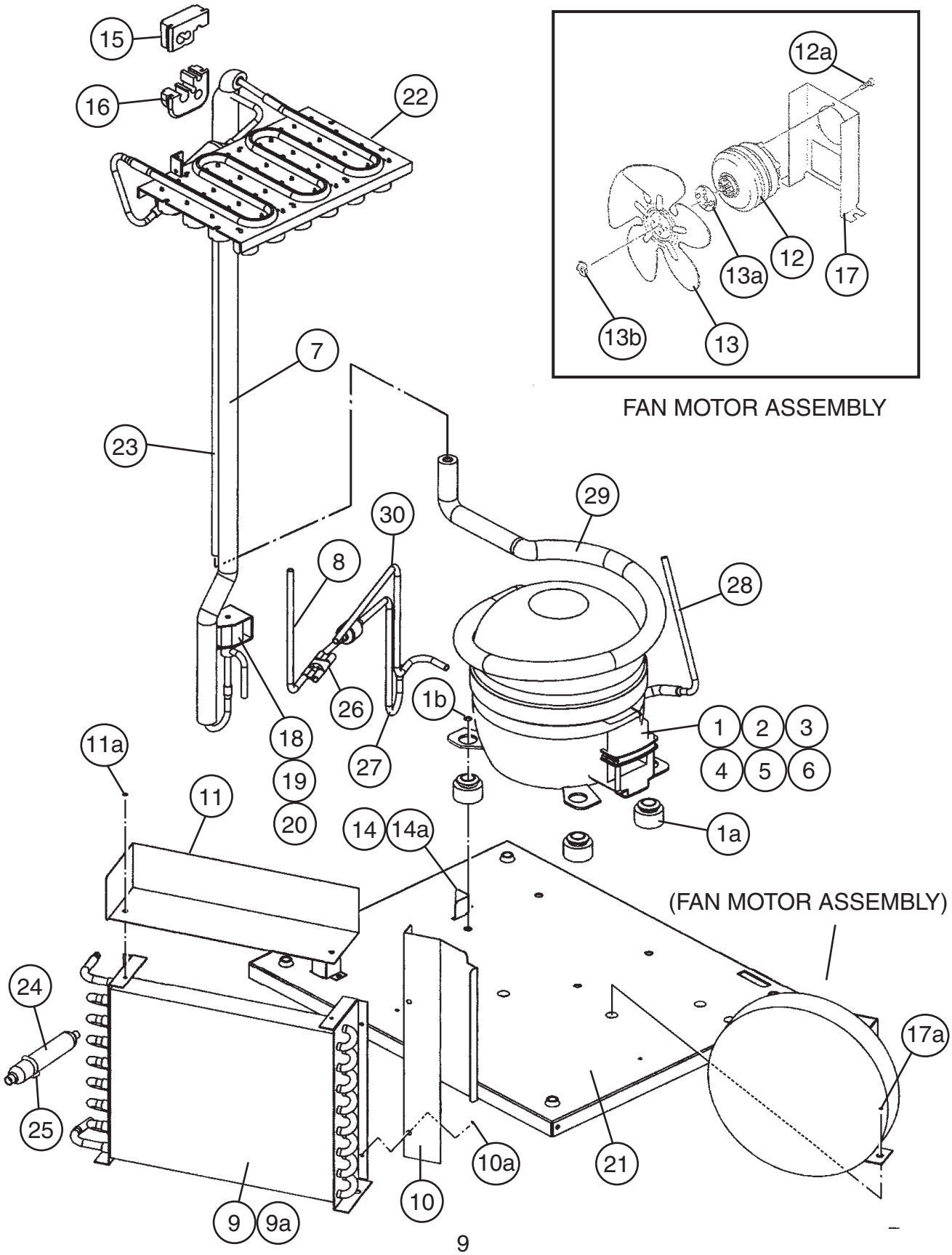

Title: **B. Refrigeration Assembly** Model: **AM-50BAE, AM-50BAE-DS, AM-50BAE-AD, AM-50BAE-ADDS**												
				Required Number								
Index No.	Description	Material or Model Number	Part Number	M-0 to R-2								
1	Compressor	QA51K13GAU6	455942-01	1								
1a	Rubber Grommet	-	438844-01	4								
1b	Bolt	-	448834-01	4								
2	PTC Relay	MM8-5CDP4M7	456252-01	1								
3	Motor Protector	MM3-38ECA	456254-01	1								
4	Protector Cover		456255-01	1								
5	Clamp		438846-01	1								
6	Clip		438847-01	1								
7	Copper Tube (H)	**AM-50BAE AM-50BAE-DS**	3X6440G01	1								
		AM-50BAE-AD AM-50BAE-ADDS	3X6440G02	1								
8	Copper Tube (J)		4A2958-01	1								
9	Condenser – Air Cooled		2H5586-01	1								
9a	T2 Screw	4×8	7P31-0408	2								
10	Plate – Cond	**AM-50BAE AM-50BAE-DS**	4Y0199-01	1								
		AM-50BAE-AD AM-50BAE-ADDS GS	4Y0199-02	1								
10a	T2 Screw	4×8	7P31-0408	2								
11	Guide – Cond	GS	4Y0200-01	1								
11a	T2 Screw	4×8	7P31-0408	2								
12	Fan Motor	SPBB4ER1	440916-01	1								
12a	Screw	-	436863-01	3								
13	Fan Blade	-	455943-01	1								
13a	Washer	-	435983-01	1								
13b	Hex Nut	-	4A1345-01	1								
14	Guide – Drain	GS	4Y0191-01	2								
14a	T2 Screw	4×8	7P31-0408	2								
15	Grommet Top	EPDM	3A2508-01	1								
16	Grommet Bottom	EPDM	3A2508-02	1								
17	Bracket – Fan Motor	GS	4X6429-01	1								
17a	Hex. Bolt SW	5×10	7B0230510	2								
18	Valve Body	24	440351-01	1								
19	Coil – Valve	ADS-24HD	440354-01	1								
20	Bolt	-	440354F01	1								
21	Base	GS	2H5574G01	1								
22	Evaporator	-	3X3948G01	1								
23	Heat Exchanger	**AM-50BAE AM-50BAE-DS**	3X6438G01	1								
		AM-50BAE-AD AM-50BAE-ADDS	3X6438G02	1								
24	Drier	DY-12QHD-03	445655-04	1								

Title: **B. Refrigeration Assembly** Model: **AM-50BAE, AM-50BAE-DS, AM-50BAE-AD, AM-50BAE-ADDS**												
				Required Number								
Index No.	Description	Material or Model Number	Part Number	M-0 to R-2								
25	Tie	T30 RSF	436156-01	1								
26	Joint – 4 Way	-	4A1221-01	1								
27	Copper Tube	-	4Y0212G01	1								
28	Copper Tube (E)	-	4Y0209-01	1								
29	Copper Tube (F)	-	3X6439G01	1								
30	Copper Tube (G)	-	4Y0210-01	1								

C. Ice Making Mechanism Assembly

AM-50BAE, AM-50BAE-DS, AM-50BAE-AD, AM-50BAE-ADDS

M-0, N-1, N-2, P-0, P-1, Q-0, R-0, R-1, R-2

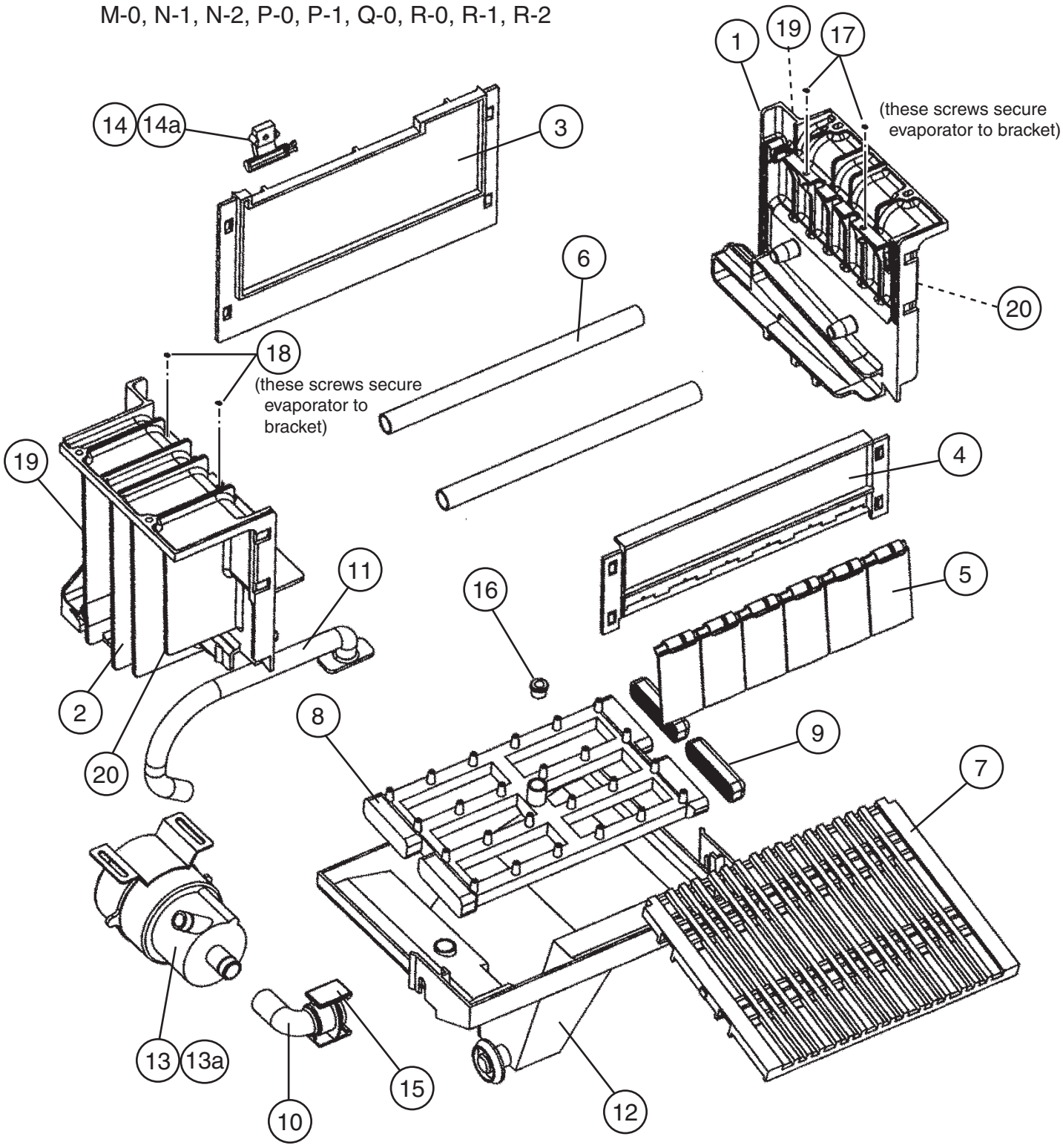

Title: **C. Ice Making Mechanism Assembly** Model: **AM-50BAE, AM-50BAE-DS, AM-50BAE-AD, AM-50BAE-ADDS**												
				Required Number								
Index No.	Description	Material or Model Number	Part Number	M-0 to P-1	Q-0 to R-2							
1	Bracket (R)	ABS	1H2637-01	1	1							
2	Bracket (L)	ABS	1H2636G01	1	-							
			1H2636-01		1							
3	Guide – Rear	ABS	3X3862-01	1	1							
4	Guide – Front	ABS	3X3861-01	1	1							
5	Separator	ABS	4X7933-01	6	6							
6	Frame – Pipe	ABS	4X8068-01	2	2							
7	Ice Chute	ABS	3X3863-01	1	1							
8	Nozzle (A)	ABS	2H4536-01	1	1							
9	Cap	SI.R	4X7936-01	2	2							
10	Suction Tube	SI.R	4X7937-01	1	1							
11	Discharge Tube	SI.R	3X3864-01	1	1							
12	Water Tank	ABS	2H4535-01	1	1							
13	Pump Motor	LMP-20CPA-U26	463045-01	1	1							
13a	Cross-Recessed Hex Bolt SW	4×10, SS	7B0230410	3	3							
14	Holder – Thermistor	PE	3H9642-01	1	1							
14a	T2 Screw	4×8, SS	7P32-0408	1	1							
15	Joint	POM	4X7934-01	1	1							
16	Reducing Pipe	ABS	4A2903-01	1	1							
17	T2 Screw	4×10, SS	7P32-0410	2	2							
18	T2 Screw	4×10, SS	7P32-0410	2	2							
19	Gasket (B1)	-	4A3355-01		2							
20	Gasket (B2)	-	4A3355-02		2							

D. Control Box Assembly

AM-50BAE, AM-50BAE-DS, AM-50BAE-AD, AM-50BAE-ADDS

M-0, N-1, N-2, P-0, P-1, Q-0, R-0, R-1, R-2

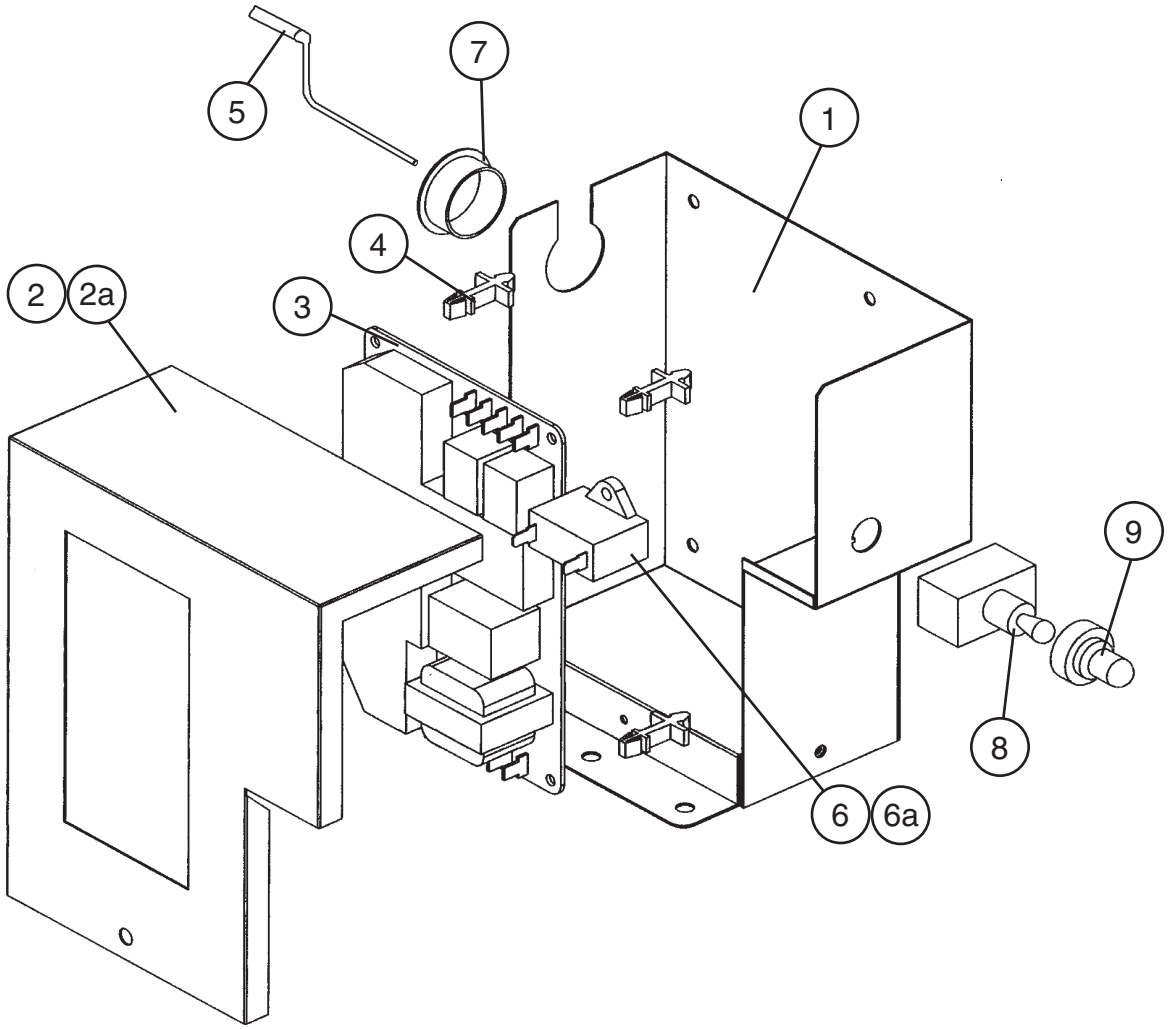

Title: **D. Control Box Assembly** Model: **AM-50BAE, AM-50BAE-DS, AM-50BAE-AD, AM-50BAE-ADDS**												
				Required Number								
Index No.	Description	Material or Model Number	Part Number	M-0 to R-2								
1	Control Box	GS	3X6447G01	1								
2	Control Box Cover	GS	3X6448G01	1								
2a	T2 Screw	4×8	7P31-0408	1								
3	Controller Board	-	463046-01	1								
4	Board Support	-	4A0336-03	4								
5	Thermistor	-	425373-05	1								
6	Capacitor	-	463047-01	1								
6a	T2 Screw	4×10	7P31-0410	1								
7	Bushing	-	428394-05	1								
8	Toggle Switch	-	443119-01	1								
9	Cap	-	4A1937-01	1								

E. Door Assembly
AM-50BAE, AM-50BAE-AD
M-0, N-1, N-2, P-0, P-1, Q-0, R-0, R-1, R-2

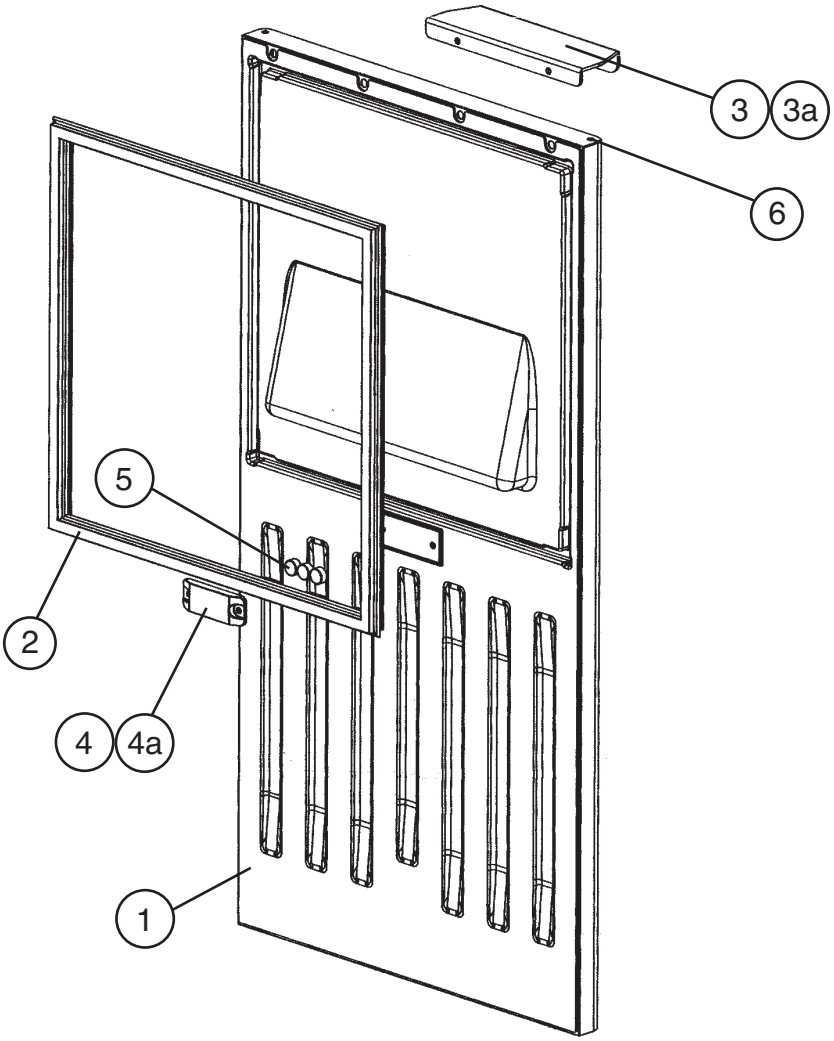

Title: **E. Door Assembly** Model: **AM-50BAE, AM-50BAE-AD**												
				Required Number								
Index No.	Description	Material or Model Number	Part Number	M-0 to Q-0	R-0 to R-2							
1	Door	**AM-50BAE**	2H5577G01	1	1							
		AM-50BAE-AD	2H5577G02	1	1							
2	Gasket (A)	-	3X6429-01	1	-							
			2A3017-01		1							
3	Handle	SS	4A2867-01	1	1							
3a	Truss Head Screw	4×10, SS	7C32-0410	4	4							
4	Holder – Magnet	ABS	4Y0203-01	1	1							
4a	Truss Head Screw	4×8, SS	7C32-0408	2	2							
5	Magnet	RARE EARTH	4A2861-01	3	3							
6	Bushing	-	417486-01	2	2							

E. Door Assembly
AM-50BAE-DS, AM-50BAE-ADDS
R-0

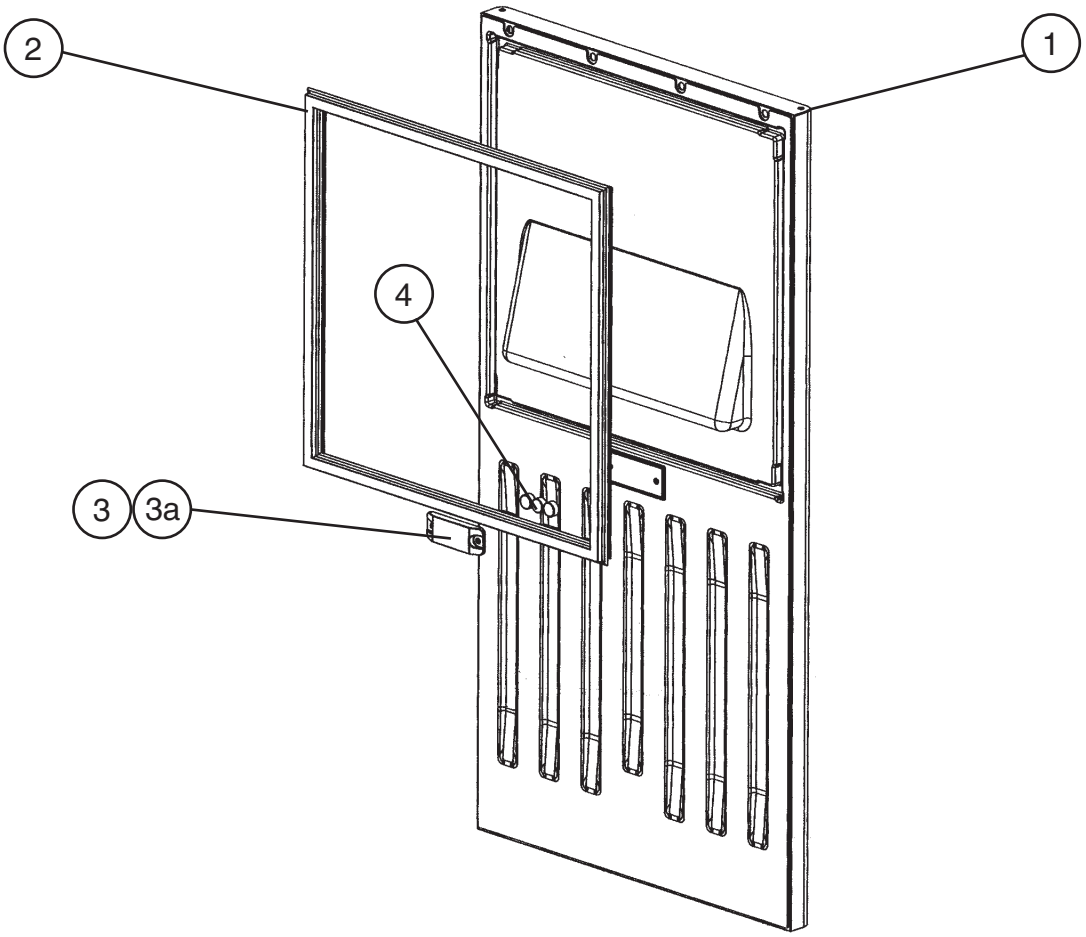

Title: **E. Door Assembly** Model: **AM-50BAE-DS, AM-50BAE-ADDS**												
				Required Number								
Index No.	Description	Material or Model Number	Part Number	R-0								
1	Door	**AM-50BAE-DS**	2A3578G01	1								
		AM-50BAE-ADDS	2A3578G02	1								
2	Gasket (A)	-	2A3017-01	1								
3	Holder – Magnet	ABS	4Y0203-01	1								
3a	Truss Head Screw	4×8, SS	7C32-0408	2								
4	Magnet	RARE EARTH	4A2861-01	3								

F. Water Circuit Assembly

AM-50BAE, AM-50BAE-DS, AM-50BAE-AD, AM-50BAE-ADDS

M-0, N-1, N-2, P-0, P-1, Q-0, R-0, R-1, R-2

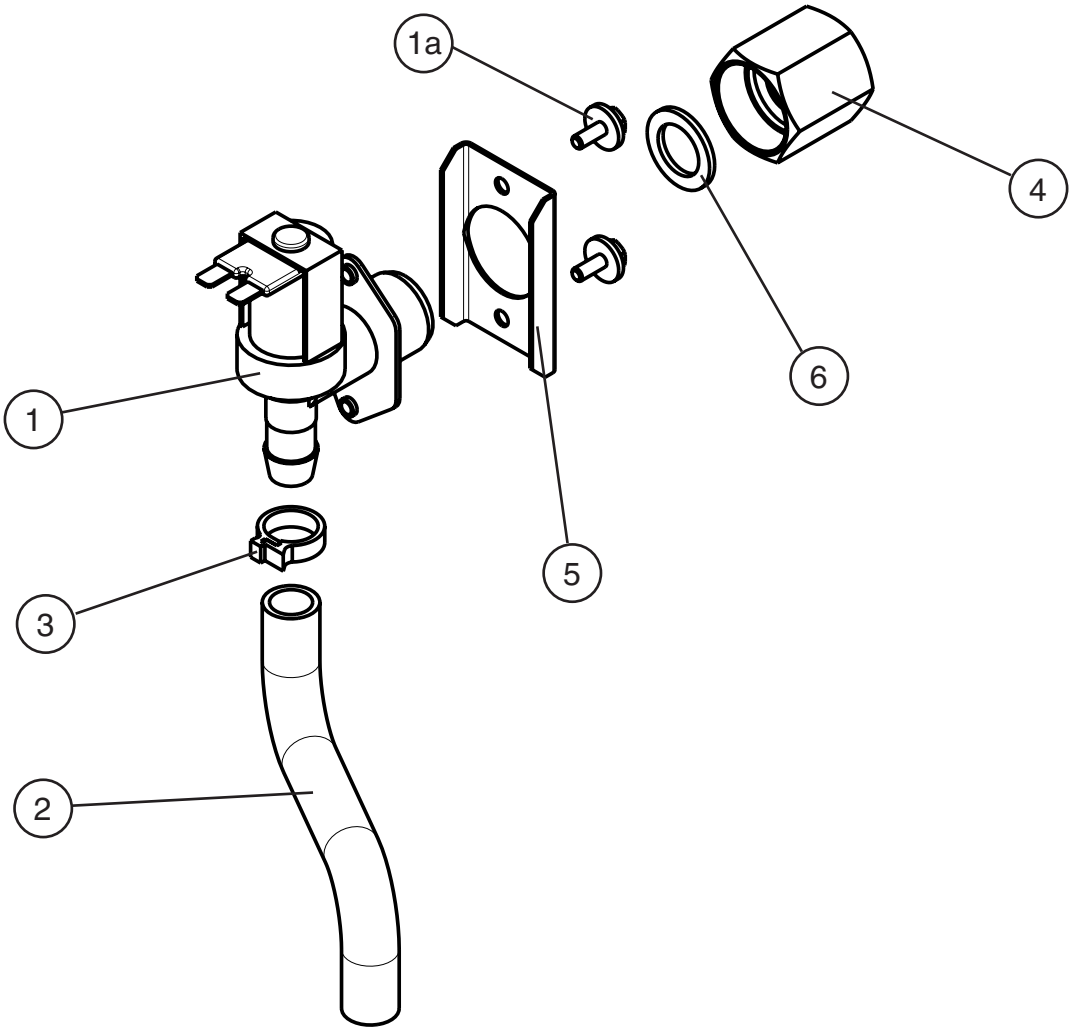

Title: **F. Water Circuit Assembly** Model: **AM-50BAE, AM-50BAE-DS, AM-50BAE-AD, AM-50BAE-ADDS**												
				Required Number								
Index No.	Description	Material or Model Number	Part Number	M-0 to N-2	P-0 to R-2							
1	Water Valve	V19 0.8m/min	458548-01	1	1							
1a	Cross – Recessed Hex Bolt SW	4×10, SS	7B0230410	2	-							
	Hex Bolt Assy (LF)	4×12, SS	7B0230412		2							
2	Tube – Water Valve	SI.R	4X7938-01	1	1							
3	Clamp	SK-15	435934-03	1	-							
	Hose Clamp	2322 HC 593	4A2017-07		1							
4	Fitting (C)	-	4A3240-01		1							
5	Water Valve Bracket	SS	4A3475-01		1							
6	Rubber Gasket	-	413854-03		1							

G. Thermostat Assembly

AM-50BAE, AM-50BAE-DS, AM-50BAE-AD, AM-50BAE-ADDS

M-0, N-1, N-2, P-0, P-1, Q-0, R-0, R-1, R-2

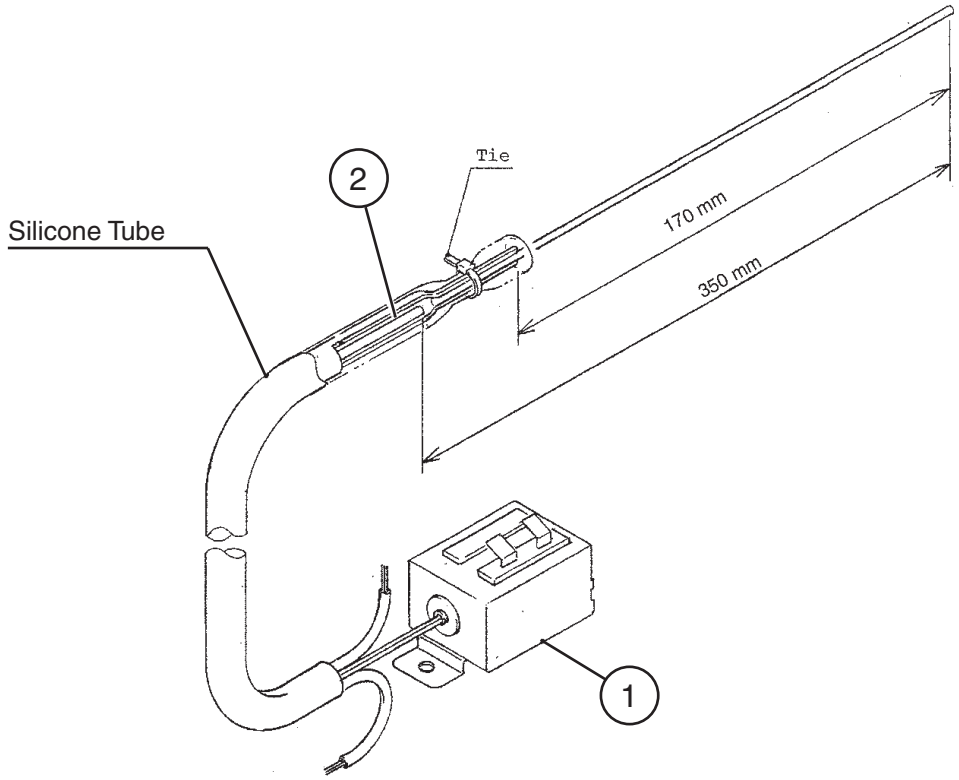

Title: **G. Thermostat Assembly** Model: **AM-50BAE, AM-50BAE-DS, AM-50BAE-AD, AM-50BAE-ADDS**												
				Required Number								
Index No.	Description	Material or Model Number	Part Number	M-0 to R-2								
1	Thermostat	-	437626-01	1								
2	Heater	-	437409-01	1								

H. Label Location

AM-50BAE, AM-50BAE-DS, AM-50BAE-AD, AM-50BAE-ADDS

M-0, N-1, N-2, P-0, P-1, Q-0, R-0, R-1, R-2

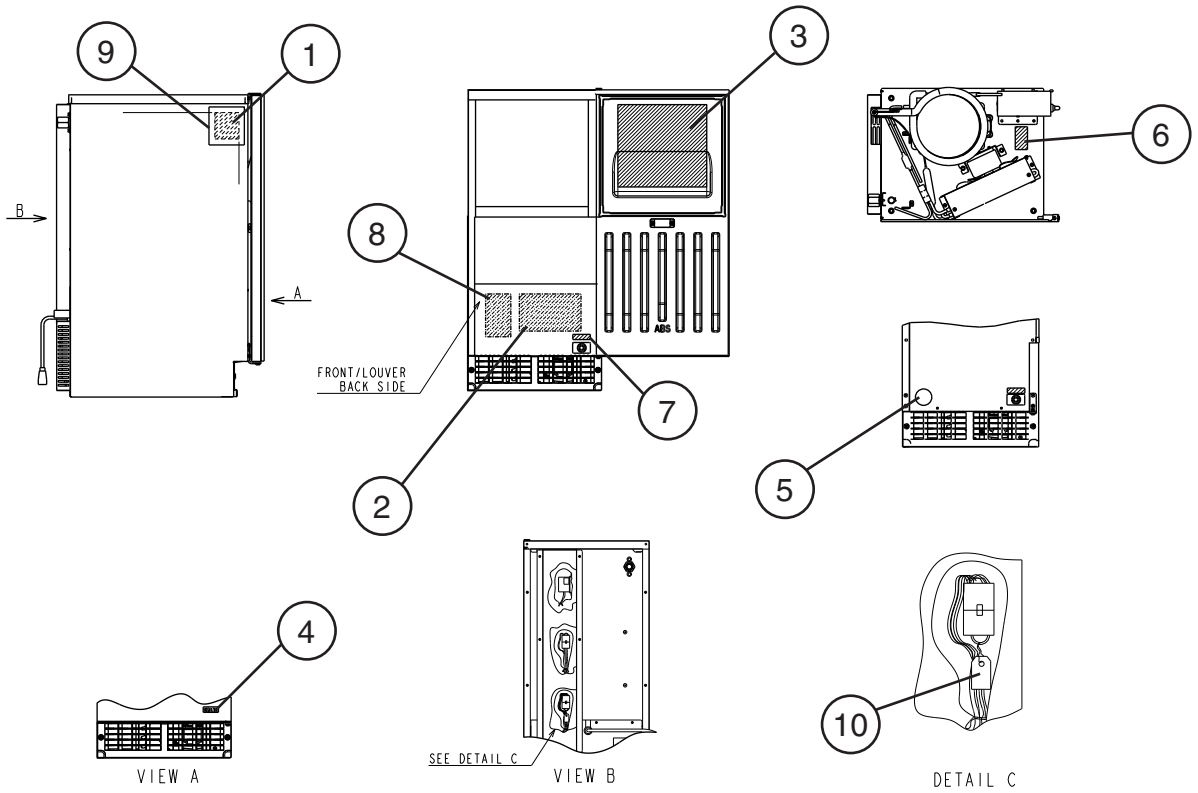

Title: **H. Label Location** Model: **AM-50BAE, AM-50BAE-DS, AM-50BAE-AD, AM-50BAE-ADDS**												
				Required Number								
Index No.	Description	Material or Model Number	Part Number	M-0 to P-1	Q-0	R-0 to R-2						
1	Nameplate	**AM-50BAE**	2A2632-01	1	1	1						
		AM-50BAE-DS	2A2632-04			1						
		AM-50BAE-AD	2A2632-03	1	1	1						
		AM-50BAE-ADDS	2A2632-05			1						
2	Wiring Label	-	3X6380-01	1	1	-						
			3A3896-01			1						
3	Maintenance Label	-	352994-01	1	-							
			2A3483-01		1	1						
4	Emblem	**AM-50BAE**	4A2112-01	1	1	1						
		AM-50BAE-AD		1	1	1						
5	Label – Penguin (R)	-	456246-01	1	1	1						
6	Label – R134a	-	444463-01	1	1	1						
7	Control Label	-	463253-01	1	1	1						
8	Caution Label (L)	-	441560-01	1	1	1						
9	Cover - Nameplate	-	4A3727-01			1						
10	Drain Pump Label	-	4A3994-01			1						

J. Accessories

AM-50BAE, AM-50BAE-AD

M-0, N-1, N-2, P-0, P-1, Q-0, R-0, R-1, R-2

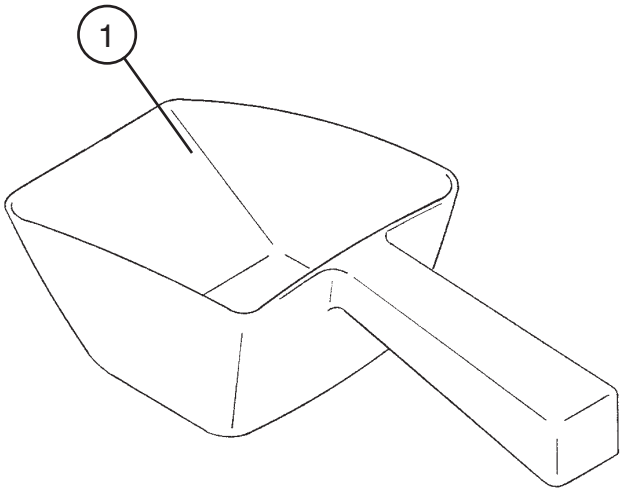

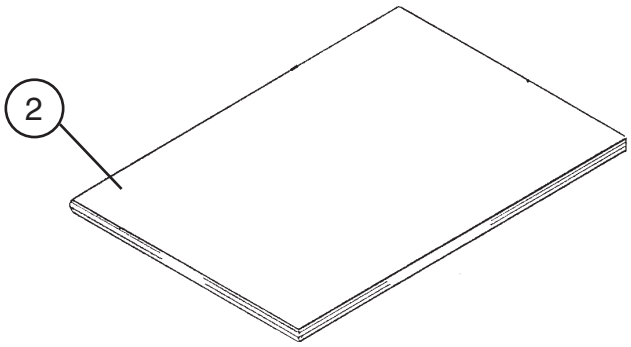

Title: **J. Accessories** Model: **AM-50BAE, AM-50BAE-AD**												
				Required Number								
Index No.	Description	Material or Model Number	Part Number	M-0 to R-2								
1	Scoop	-	204336-01	1								
2	Instruction Manual	PAPER	91A1VG10B	1								

J. Accessories
AM-50BAE-DS, AM-50BAE-ADDS
R-0

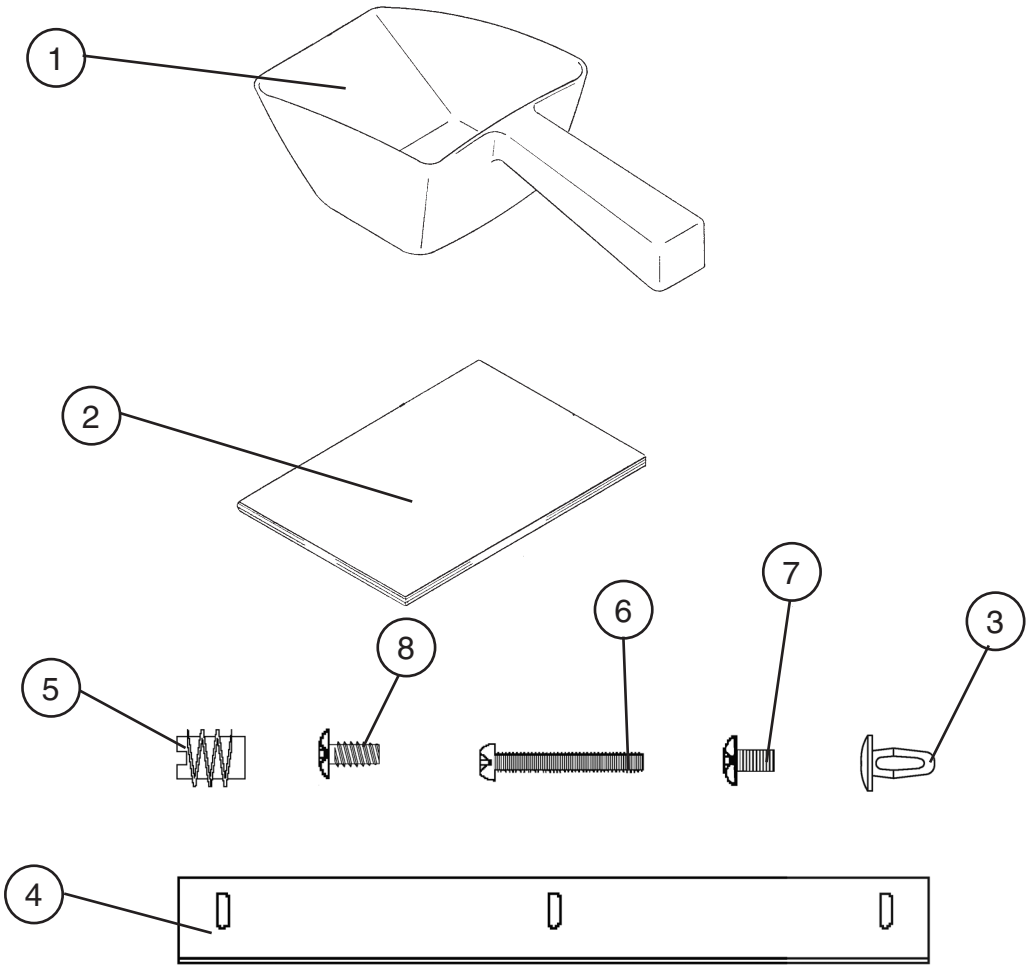

Title: **J. Accessories** Model: **AM-50BAE-DS, AM-50BAE-ADDS**												
				Required Number								
Index No.	Description	Material or Model Number	Part Number	R-0								
1	Scoop	-	204336-01	1								
2	Instruction Manual	PAPER	91A1VG10B	1								
3	Canoe Clip	-	4A0629-02	2								
4	Bracket	-	4A3998-01	1								
5	Threaded Wood Insert	-	4A4004-01	6								
6	Pan Head Screw	4×25 SS	7C12-0425	4								
7	Truss Head Screw	4×8 SS	7C32-0408	2								
8	T2 Screw	4×8 SS	7P32-0408	3								