Reliability is a
beautiful thing™

HOSHIZAKI®

SELF-CONTAINED CUBER
(OPEN CELL TYPE)

Model

AM-50BAE
AM-50BAE-AD

SERVICE MANUAL

NUMBER: 73126
ISSUED: December 22, 2004

IMPORTANT

Only qualified service technicians should attempt to service or maintain this icemaker. No such service or maintenance should be undertaken until the technician has thoroughly read this Service Manual.

HOSHIZAKI provides this manual primarily to assist qualified service technicians in the service and maintenance of the icemaker.

Should the reader have any questions or concerns which have not been satisfactorily addressed, please call or write to the HOSHIZAKI Technical Support Department for assistance.

HOSHIZAKI AMERICA, INC.
618 Highway 74 South
Peachtree City, GA 30269

Attn: HOSHIZAKI Technical Support Department

Phone: 1-800-233-1940 Technical Service
(770) 487-2331
Fax: (770) 487-3360

NOTE: To expedite assistance, all correspondence/communication MUST include the following information:

- Model Number
- Serial Number
- Complete and detailed explanation of the problem

Please review this manual. It should be read carefully before the icemaker is serviced or maintenance operations performed. Only qualified service technicians should service and maintain the icemaker. This manual should be made available to the technician prior to service or maintenance.

CONTENTS

I. Specifications

1. Dimensions/Connections

[a] AM-50BAE

Units = mm

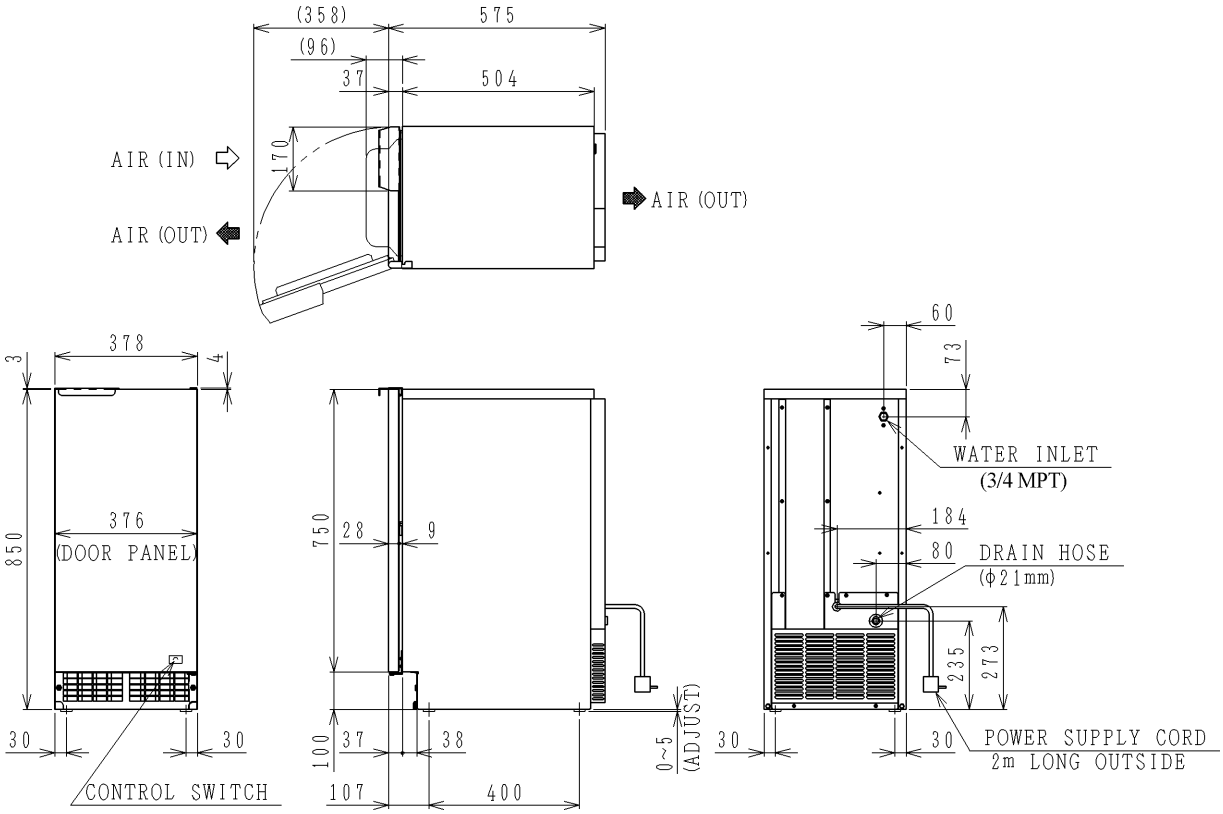

[b] AM-50BAE-AD

Units = mm

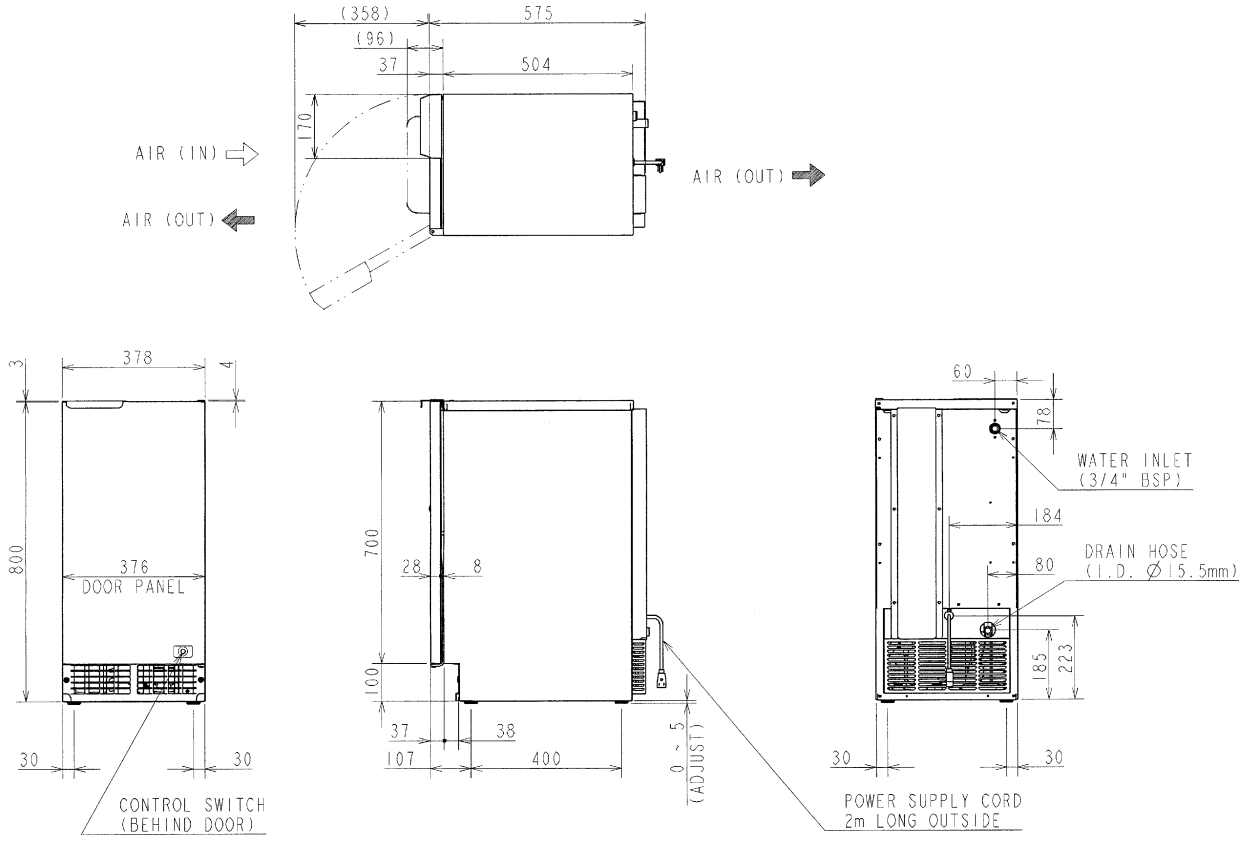

2. Specifications
[a] AM-50BAE

AC SUPPLY VOLTAGE	115/60/1
AMPERAGE	3.4 A (5 Min. Freeze AT 104°F / WT 80°F)
MINIMUM CIRCUIT AMPACITY	15 A
MAXIMUM FUSE SIZE	15 A

APPROXIMATE ICE PRODUCTION PER 24 HR.
lbs./day (kg/day)
Reference without *marks

Ambient Temp.(°F)	WATER TEMP. (°F) 50	70	90
70	*51 (23)	46 (21)	43 (19)
80	47 (22)	40 (18)	38 (17)
90	46 (21)	*35 (16)	32 (14)
100	40 (18)	34 (15)	29 (13)

SHAPE OF ICE	Column ϕ20 x H 27mm
ICE PRODUCTION PER CYCLE	0.595 lbs. (0.27 kg) 24 pcs.
APPROXIMATE STORAGE CAPACITY	27 lbs. (12.5 kg) [Bin Control Setting 22 lbs. (10.0 kg)]

ELECTRIC & WATER CONSUMPTION	90/70°F	70/50°F
ELECTRIC W (kWH/100 lbs.)	244 (17.0)	222 (10.4)
WATER gal./24HR (gal./100 lbs.)	24.0 (71.0)	44.0 (85.0)

EXTERIOR DIMENSIONS (WxDxH)	14.9" x 22.6" x 33.5" (378 x 575 x 850mm)
EXTERIOR FINISH	Stainless steel, Galvanized Steel (Rear)
WEIGHT	Net 88 lbs. (40 kg), Shipping 97 lbs. (44 kg)
CONNECTIONS - ELECTRIC	Cord Connection
- WATER SUPPLY	Inlet 3/4" MPT
- DRAIN	Outlet HOSE I.D. Φ15.5mm
CUBE CONTROL SYSTEM	Thermistor. Timer
HARVESTING CONTROL SYSTEM	Hot gas. Thermistor
ICE MAKING WATER CONTROL	Thermistor, Timer
COOLING WATER CONTROL	N/A
BIN CONTROL SYSTEM	Thermostat
COMPRESSOR	Hermetic, Model QA51K13GAU6
CONDENSER	Air-cooled, Fin and tube type
EVAPORATOR	Tin-plated copper tube on sheet and cups
REFRIGERANT CONTROL	Capillary Tube
REFRIGERANT CHARGE	R134a 4.2 oz. (120 g)
DESIGN PRESSURE	High 240 PSIG, Low 120 PSIG
P.C. BOARD CIRCUIT PROTECTION	N/A
COMPRESSOR PROTECTION	Auto-reset Overload Protector
ICE MAKER PROTECTION	N/A
ACCESSORIES - SUPPLIED	Ice Scoop
- REQUIRED	N/A
OPERATING CONDITIONS	VOLTAGE RANGE 104 - 127 V
	AMBIENT TEMP. 45 - 100° F
	WATER SUPPLY TEMP. 45 - 95° F
	WATER SUPPLY PRESSURE 7 - 113 PSIG
AGENCY	UL OUTDOOR APPROVED, cUL
	NSF

We reserve the right to make changes in specifications and design without prior notice.

[b] AM-50BAE-AD

AC SUPPLY VOLTAGE	115/60/1			
AMPERAGE	3.4 A (5 Min. Freeze AT 104°F / WT 80°F)			
MINIMUM CIRCUIT AMPACITY	15 A			
MAXIMUM FUSE SIZE	15 A			
APPROXIMATE ICE PRODUCTION	Ambient	WATER TEMP. (°F)		
PER 24 HR.	Temp.(°F)	50	70	90
lbs./day (kg/day)	70	*55 (25)	49 (22)	46 (21)
Reference without *marks	80	50 (23)	41 (19)	41 (19)
	90	49 (22)	*34 (15)	33 (15)
	100	42 (19)	34 (15)	32 (15)
SHAPE OF ICE	Column	ϕ20 x H27mm		
ICE PRODUCTION PER CYCLE	0.65 lbs. (0.29 kg) 24 pcs.			
APPROXIMATE STORAGE CAPACITY	27 lbs. (12.5 kg) [Bin Control Setting 22 lbs. (10.0 kg)]			
ELECTRIC & WATER CONSUMPTION	90/70°F		70/50°F	
ELECTRIC W (kWH/100 lbs.)	238 (16.8)		227 (9.9)	
WATER gal./24HR (gal./100 lbs.)	22.0 (63.9)		30.0 (53.7)	
EXTERIOR DIMENSIONS (WxDxH)	14.9" x 22.6" x 31.5"		(378 x 575 x 800mm)	
EXTERIOR FINISH	Stainless steel, Galvanized Steel (Rear)			
WEIGHT	Net 88 lbs. (40 kg), Shipping 99 lbs. (45 kg) without pallet			
CONNECTIONS - ELECTRIC	Cord Connection			
- WATER SUPPLY	Inlet 3/4" BSP			
- DRAIN	Outlet HOSE I.D. ϕ15.5mm			
CUBE CONTROL SYSTEM	Thermistor. Timer			
HARVESTING CONTROL SYSTEM	Hot gas. Thermistor			
ICE MAKING WATER CONTROL	Thermistor. Timer			
COOLING WATER CONTROL	N/A			
BIN CONTROL SYSTEM	Thermostat			
COMPRESSOR	Hermetic, Model QA51K13GAU6			
CONDENSER	Air-cooled, Fin and tube type			
EVAPORATOR	Tin-plated copper tube on sheet and cups			
REFRIGERANT CONTROL	Capillary Tube			
REFRIGERANT CHARGE	R134a 4.2 oz. (120 g)			
DESIGN PRESSURE	High 240 PSIG, Low 120 PSIG			
P.C. BOARD CIRCUIT PROTECTION	N/A			
COMPRESSOR PROTECTION	Auto-reset Overload Protector			
ICE MAKER PROTECTION	N/A			
ACCESSORIES - SUPPLIED	Ice Scoop; 3/8" male flare Water Inlet fitting			
- REQUIRED	N/A			
OPERATING CONDITIONS	VOLTAGE RANGE		104 - 127 V	
	AMBIENT TEMP.		45 - 100° F	
	WATER SUPPLY TEMP.		45 - 95° F	
	WATER SUPPLY PRESSURE		7 - 113 PSIG	
AGENCY	UL OUTDOOR APPROVED, cUL			
	NSF			

We reserve the right to make changes in specifications and design without prior notice.

II. General Information

1. Construction

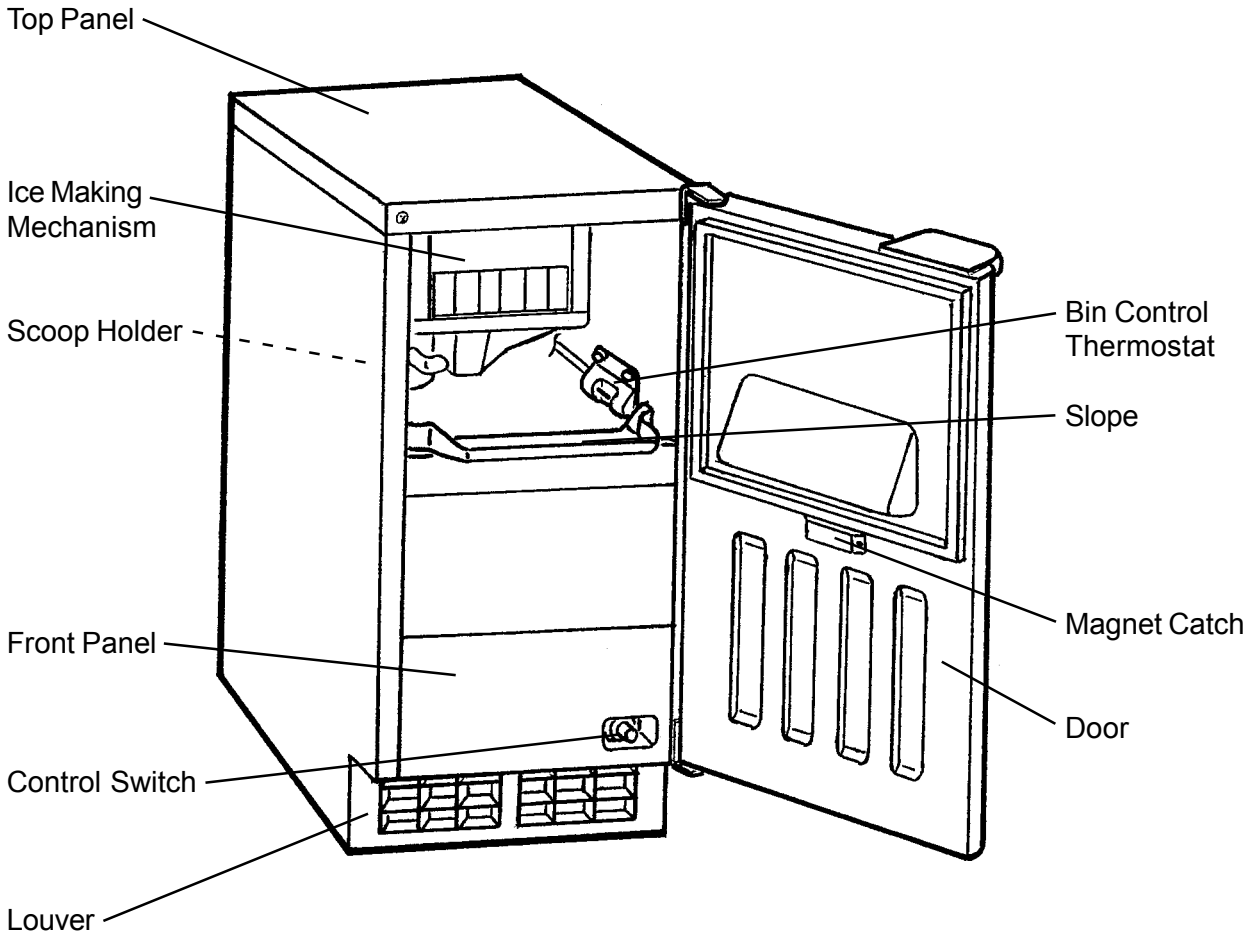

2. Icemaking Compartment

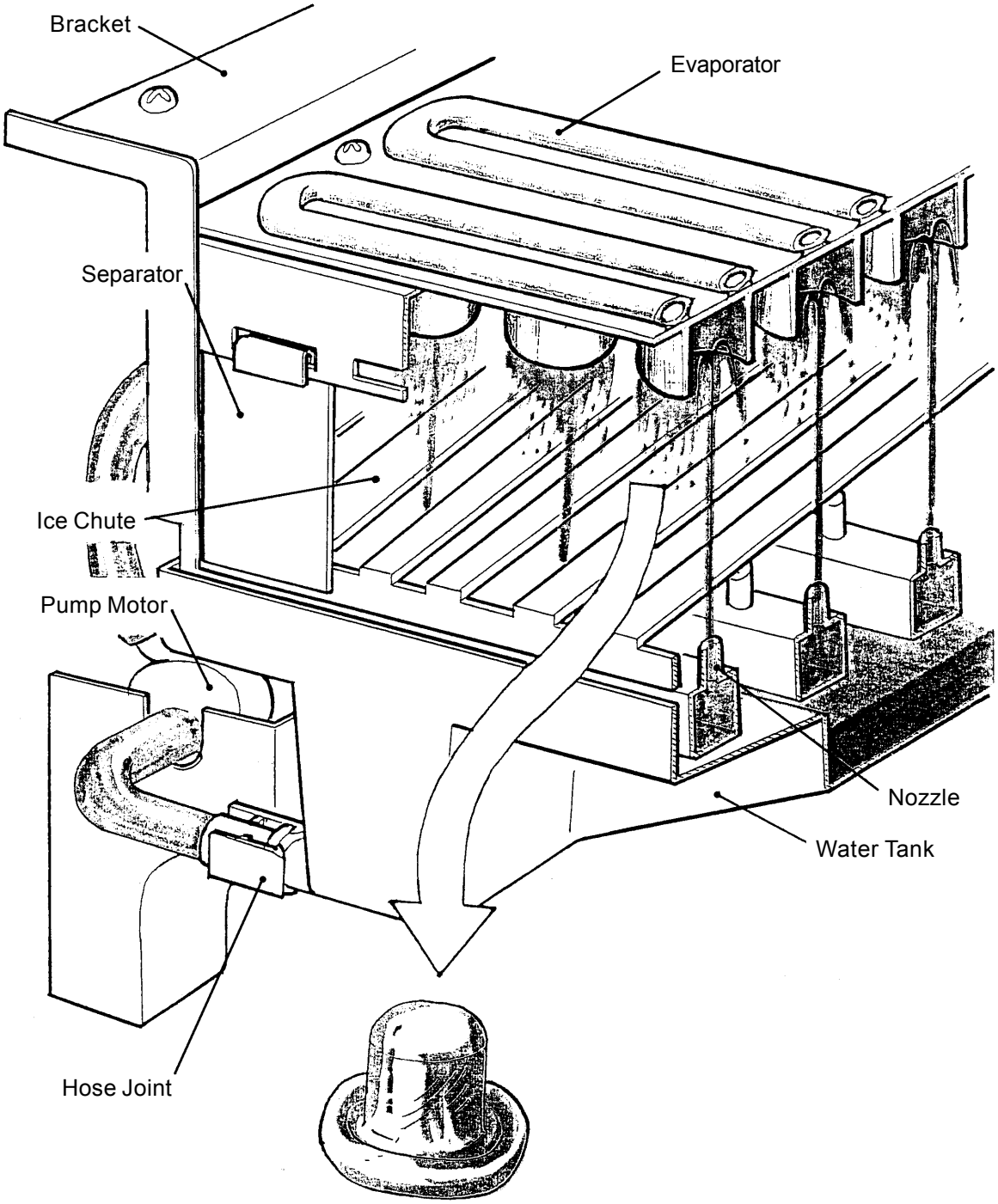

U1VA6060209

III. Installation and Operating Instructions

1. Checks Before Installation

* Visually inspect the exterior of the shipping container and report any severe damage to the carrier.

WARNING

Remove shipping tape(s) and packing as follows. If any are left in the icemaker, it will not work properly.

IMPORTANT

1. Remove shipping tape holding the door.
2. Ensure all components, fasteners and thumbscrews are securely in place.

* Remove the package containing accessories. Remove shipping tape holding the separator.
* Check that refrigerant lines do not rub or touch lines or other surfaces.
* Check that the compressor is snug on all mounting pads.
* See the nameplate on the upper right part of the left side panel, and check that your voltage supplied corresponds with the voltage specified on the nameplate.

2. Location

WARNING

Normal operating ambient temperature should be within 45°F (7°C) to 100°F (38°C); Normal operating water temperature should be within 45°F (7°C) to 95°F (35°C). Operation of the icemaker, for extended periods, outside of these normal temperature ranges may affect production capacity.

For best operating results:

* The icemaker should not be located next to ovens, grills or other high heat producing equipment.
* The location should provide a firm foundation for the equipment. Level the icemaker from side to side and front to rear.
* Avoid a site where dripping is not allowed.
* This icemaker will not work at subfreezing temperatures. To prevent damage to the water supply line, drain the icemaker when air temperature is below freezing.
* This icemaker requires no clearance on either side. But allow enough space at rear for water supply and drain connections and at least 15" (approx. 38 cm) clearance at front.

3. Setup

1) Unpack the icemaker, and remove all shipping cartons, tapes and packing BEFORE operating the unit. Be careful not to damage the exterior panels when handling the icemaker.

2) Position the icemaker in a selected site. Clean the interior with soap and water and rinse thoroughly.

3) Level the icemaker in both the left-to-right and the front-to-rear directions.

4) The perimeter where the machine touches the floor should be sealed with silicone for sanitation.

Built-In Installation

[a] Checking the Installation Site

Ensure a 15" (381 mm) wide space for building in the icemaker.

1) To build in between two units:

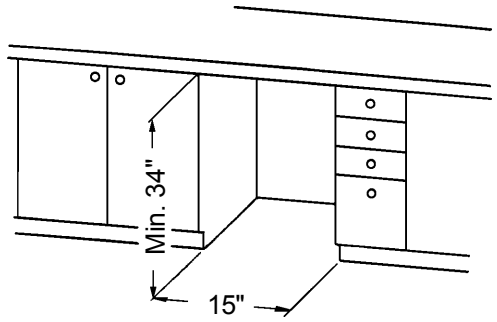

AM-50BAE

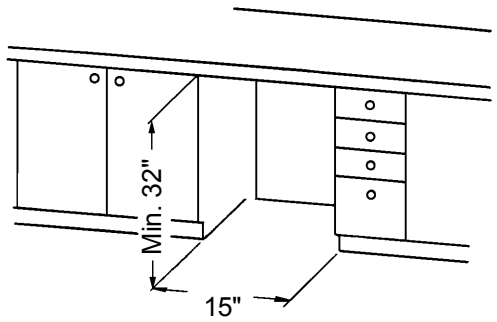

AM-50BAE-AD

Fig. 1

2) To build in between a unit and a wall or a tall unit:

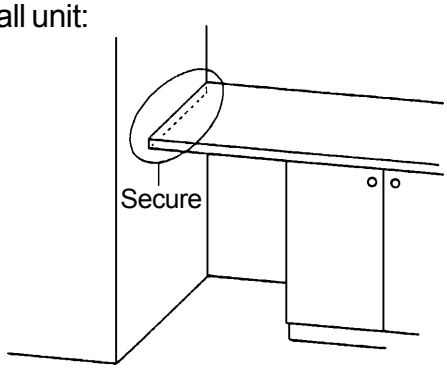

Fig. 2

Secure the counter to the wall with a bracket or the like. Ensure a 15" (381 mm) wide, min. 34" (864 mm) high space for the icemaker.

For the AM-50BAE-AD ensure a min. 32" (814 mm) high space for the icemaker.

IMPORTANT

Do not let the weight of the counter rest on the icemaker.

3) To build in between a unit and an open space:

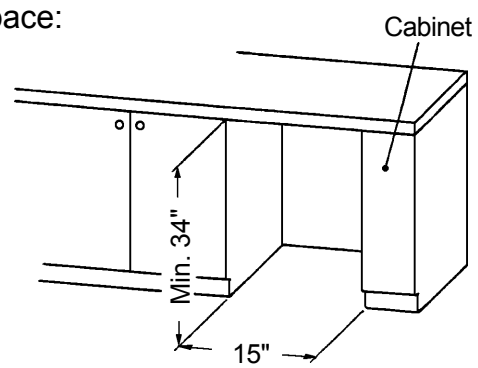

AM-50BAE

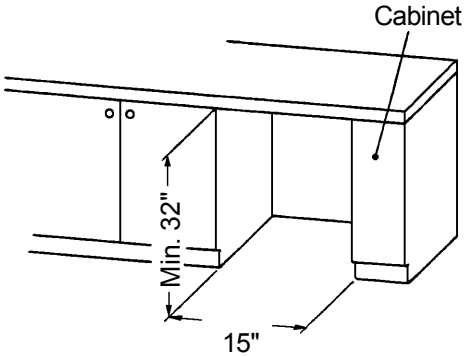

AM-50BAE-AD

Fig. 3

Use a cabinet or the like to support the counter before building in the icemaker.

4) To build into a corner:

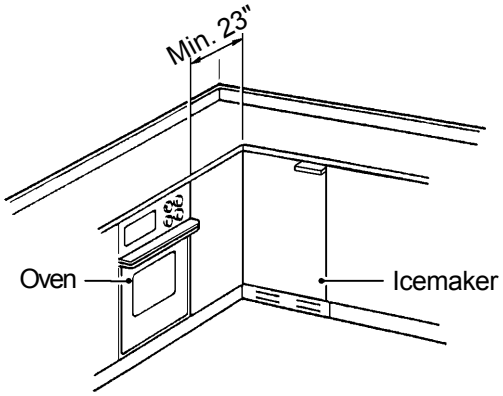

Fig. 4

Do not build in the icemaker in a corner where the door will hit other equipment such as an oven handle or where the icemaker cannot be pulled out for service.

[b] Building in the Icemaker

1) Make water supply and drain connections.

2) Plug in the icemaker.

3) Build in the icemaker:
Slowly push the lower part of the icemaker into place. Beware of adjacent equipment.

IMPORTANT

While building in the icemaker, do not damage the water supply and drain connections or the power cord.

Reversing the Door Hinges

1) Right-hinged door.

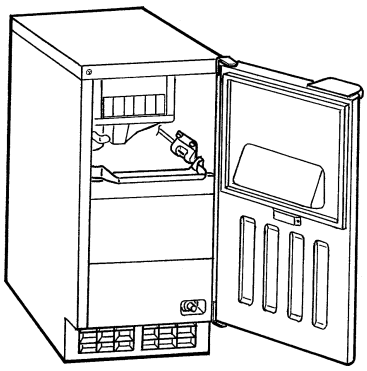

2) **a.** Remove the hinge stop pin from hinge (B).
   b. Remove the door from hinge (A).

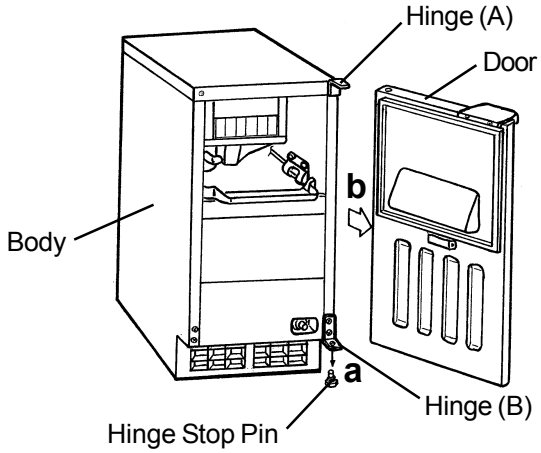

3) **c.** Remove the two screws securing the top panel.
   d. Remove hinge (A) and brace - top.
   e. Remove hinge (B).

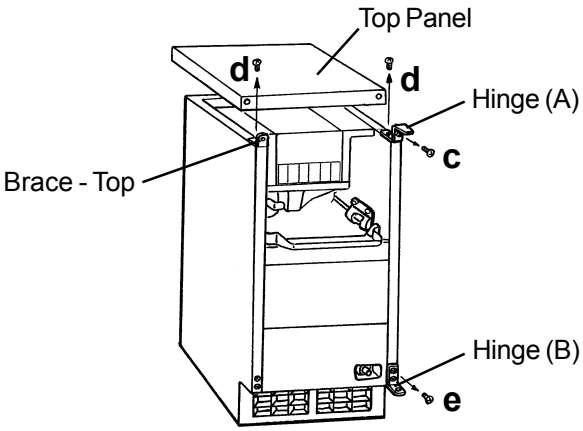

4) **f.** Remove hinge (A) and brace - top from the body. Attach brace - top to body (right). Flip hinge (A) over as shown in the illustration below, and fasten to body (left).

g. Turn the top panel 180°, hook its rear on the body, and secure its front with screws.

h. Attach hinge (B) on the left.

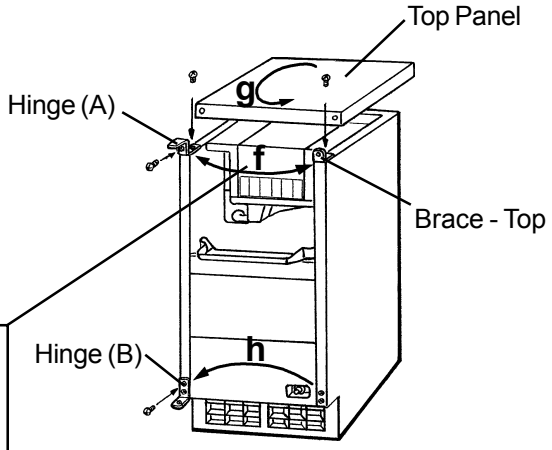

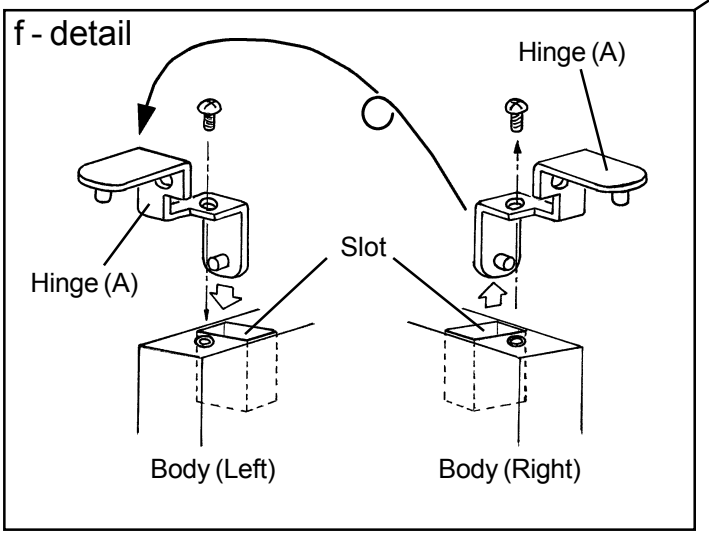

5) **i.** Remove the handle from the front left and reattach it to the front right of the door.

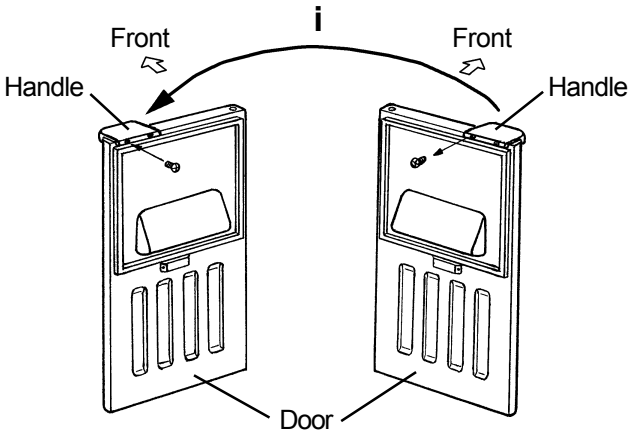

6) **j.** Insert the door into hinge (A).

k. Screw the hinge stop pin into hinge (B) until it is tight.

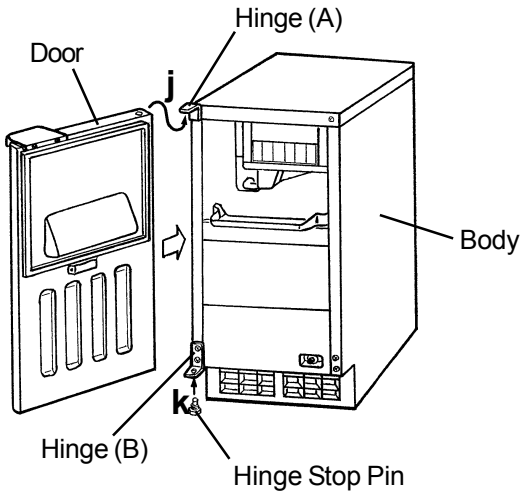

7) Left-hinged door.

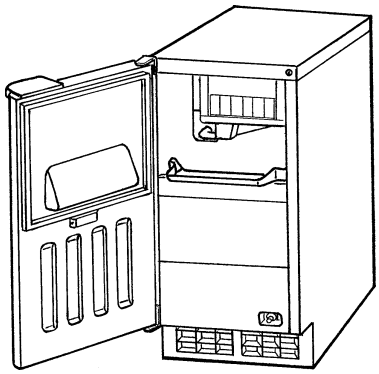

4. Electrical Connections

WARNING

THIS APPLIANCE MUST BE GROUNDED.

This icemaker requires a ground that meets national and local electrical code requirements. To prevent possible severe electrical shock injury to individuals or extensive damage to equipment, install a proper ground wire to this icemaker. Remove the plug from the mains socket before any maintenance, repairs or cleaning is undertaken.

* This icemaker must be plugged into a separated power receptacle which has enough capacity. The maximum allowable voltage variation should not exceed ±10 percent of the nameplate rating. See the nameplate.
* Usually an electrical permit and services of a licensed electrician are required.

5. Water Supply and Drain Connections

WARNING

To prevent damage to the freezer mechanism, do not operate this icemaker when the water supply is OFF, or if the pressure is below the recommended minimum water pressure of 10 PSIG (0.7 bar). Stop the icemaker until proper water pressure is resumed.

* Attach the brass fitting included in the accessory bag as shown in Fig. 5. The brass fitting size is 1/2" FPT and must be connected only to a potable water supply.

* A water supply line shut-off valve and drain valve must be installed.

* Water supply pressure should be a minimum of 10 PSIG (0.7 bar) and a maximum of 113 PSIG (7.5 bar). If the pressure exceeds 113 PSIG (7.5 bar), use a pressure reducing valve.

* Drain outlet hose is 5/8" (16 mm) ID and internally connected to a 2/3" (17 mm) OD drain outlet.

* For gravity drain installation, drain must be 1/4" fall per foot (2 cm fall per meter) on horizontal runs to get good flow.

* Keep a more than 2 vertical inch (5 vertical cm) air gap between the drain pipe end and the drain.

* The drain pipe must be so laid as to prevent a backflow into the storage bin.

* For condensate pump installation for exiting drain, refer to condensate pump instruction manual.

* A plumbing permit and services of a licensed plumber may be required in some areas.

* This icemaker should be installed in accordance with applicable national, state and local regulations.

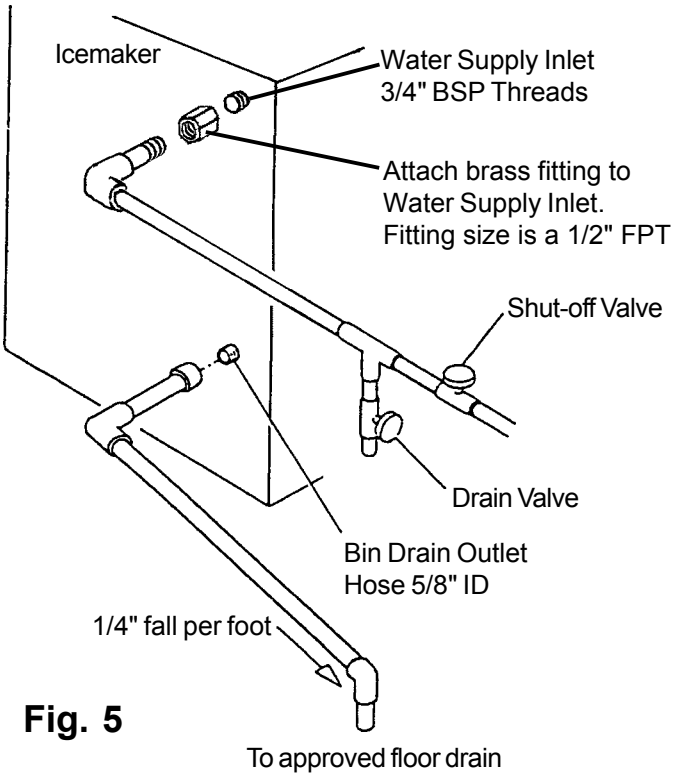

Fig. 5

6. Final Check List

1) Is the icemaker level?

2) Is the icemaker in a site where the ambient temperature is within 45°F (7°C) to 100°F (38°C) and the water temperature within 45°F (7°C) to 95°F (35°C) all year around?

3) Have all shipping tape(s), string and packing been removed from the icemaker?

4) Are all components, fasteners and thumbscrews securely in place?

5) Have all electrical and piping connections been made?

6) Has the power supply voltage been tested or checked against the nameplate rating? Has a proper ground been installed to the icemaker?

7) Are the water supply line shut-off valve and drain valve installed? Has the water supply pressure been checked to ensure a minimum of 10 PSIG (0.7 bar) and a maximum of 113 PSIG (7.5 bar)?

8) Have the compressor hold-down bolts and all refrigerant lines been checked against vibration and possible failure?

9) Has the bin control thermostat been checked for correct operation?

10) Has the user been given the Instruction Manual and instructed on how to operate the icemaker and the importance of the recommended periodic maintenance?

11) Has the user been given the name and telephone number of an authorized service agent?

7. Startup

* Check that shipping tape(s), string and packing are removed before starting the icemaker.

1) Clean inside the storage bin and door.

2) Open the water supply line shut-off valve and plug in the icemaker.

3) Move the control switch to the “ICE" position.

* The freezing cycle will start automatically.

8. Preparing the Icemaker for Long Storage

WARNING

Drain the icemaker to prevent damage to the water supply line at subfreezing temperatures, using air or carbon dioxide. Shut off the icemaker until proper air temperature is resumed.

1) Close the water supply line shut-off valve, and open the drain valve.

2) Move the control switch to the “OFF" position.

3) Blow out the water supply line and the internal water circuit.

Note: This procedure is necessary to protect the icemaker from freezing up at subfreezing temperatures.

4) Unplug the icemaker.

5) Remove all ice from the storage bin, and clean the bin.

6) Close the drain valve.

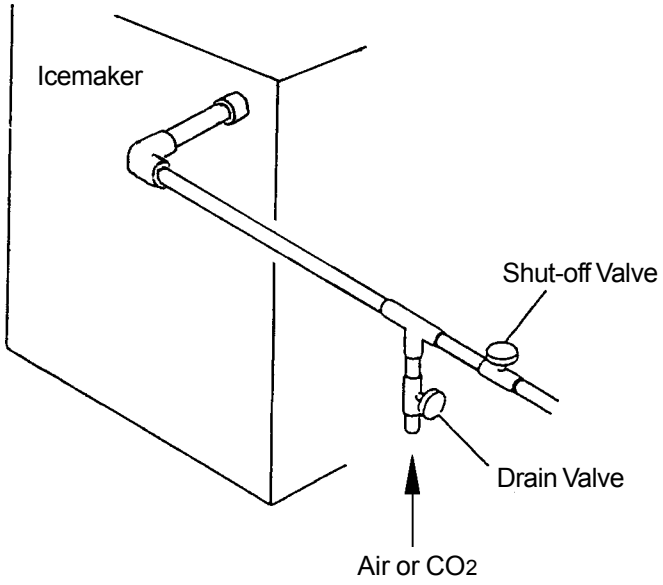

Fig. 6

IV. Cleaning and Maintenance

IMPORTANT

1. Ensure all components, fasteners and thumbscrews are securely in place after any maintenance or cleaning is done to the equipment.
2. Wash your hands before removing ice. Use the scoop provided to remove ice.
3. Keep the scoop clean. Clean it by using a neutral cleaner at least once a day, and rinse thoroughly.
4. Close the bin door after removing ice to prevent entrance of dirt, dust or insects into the bin.
5. Clean the bin liner at least once a month by using a neutral cleaner. Rinse thoroughly after cleaning.
6. The storage bin is for ice use only. Do not store anything else in the bin.
7. Keep the area around the icemaker clean. Dirt, dust or insects in the icemaker could cause electrical damage to the equipment or harm to individuals.

1. Cleaning and Sanitizing Instructions

WARNING

1. HOSHIZAKI recommends cleaning this unit at least once a year. More frequent cleaning, however, may be required in some existing water conditions.
2. To prevent injury to individuals and damage to the icemaker, do not use ammonia type cleaners.
3. Always wear liquid-proof gloves to prevent the cleaning and sanitizing solutions from coming into contact with skin.

[a] Cleaning Solution

Dilute 5 fl. oz. (148 ml) of recommended cleaner Hoshizaki “Scale Away" or “LIME-A-WAY" (Economics Laboratory, Inc.) with 1 gallon (3.8 l) of warm water.

IMPORTANT

For safety and maximum effectiveness, use the solution immediately after dilution.

[b] Cleaning Procedure

The cleaning process will remove lime deposits from the water system.

1) Remove all ice from the evaporator and the storage bin.

Note: To remove cubes on the evaporator, move the control switch to the “OFF" position and move it back to the “ICE" position after 3 minutes. The defrost cycle starts and the cubes will be removed from the evaporator.

2) Move the control switch to the “OFF" position. Close the water supply line shut-off valve.

3) Disconnect the suction tube by compressing both plastic tabs to unlock the joint in the direction of the black arrows and pulling the tube clear.

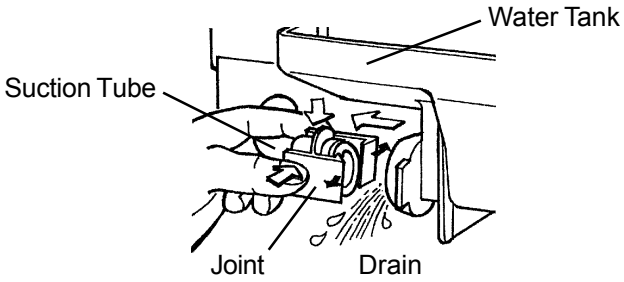

4) Spread out the tabs on both sides of the water tank to unlock it, then pull it out toward you. Drain the tank.

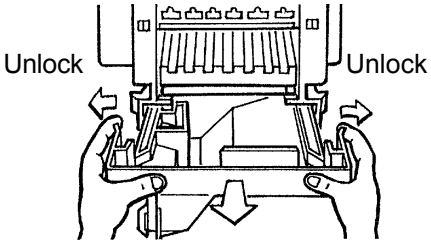

5) After draining, slide in the water tank along the rails at the bottom of the right and left brackets until it clicks into place.

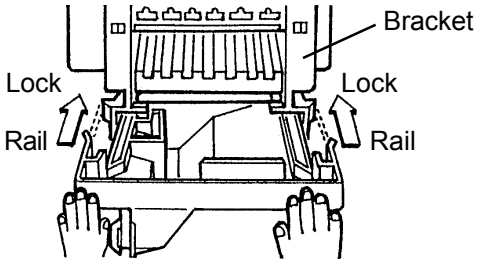

6) Refit the suction tube onto the water tank inlet by pushing the joint to lock it securely in the direction of the arrows. A loose fitting may cause a water leak.

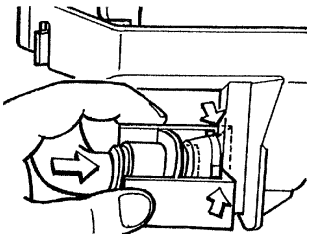

7) Slowly pour the cleaning solution into the water tank.

8) Move the control switch to the “WASH" position.

9) After circulating the cleaning solution for about 30 minutes, move the control switch to the “OFF" position.

10) Remove the water tank, drain it, and replace it as described in 3) through 6).

11) Open the water supply line shut-off valve.

12) Move the control switch to the “WASH" position to circulate clean water for about 5 minutes.

13) Move the control switch to the “OFF" position, then remove the water tank, drain it, and replace it as described in 3) through 6).

14) Repeat 12) and 13) three more times to rinse thoroughly.

[c] Sanitizing Solution

Dilute 0.5 fl. oz. (14.8 ml or 1 tbs) of 5.25% sodium hypochlorite solution (chlorine bleach) with 1 gallon (3.8 l) of warm water. Using a chlorine test strip or other method, confirm that you have a concentration of about 200 ppm.

IMPORTANT

For safety and maximum effectiveness, use the solution immediately after dilution.

[d] Sanitizing Procedure

The sanitizing process will sanitize the icemaker.

1) Move the control switch to the “OFF" position.

2) Open the bin door and remove ice from the storage bin.

3) Remove the slope by bending its center carefully and releasing it from the two slope shafts. Remove the slope from the storage bin.

4) Thoroughly clean and sanitize the storage bin, slope, scoop and any parts normally accessible from the storage bin.

5) Remove each separator by lifting it to the horizontal position and pushing it hard inward. Remove all separators in the same way and clean and sanitize them.

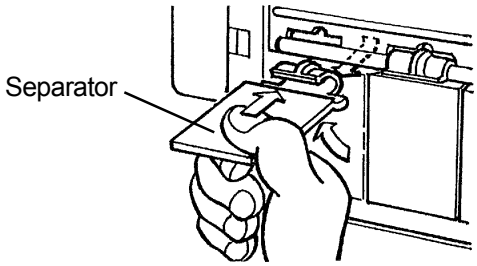

6) Disconnect the suction tube by compressing both plastic tabs to unlock the joint in the direction of the black arrows and pulling the tube clear to drain the tank.

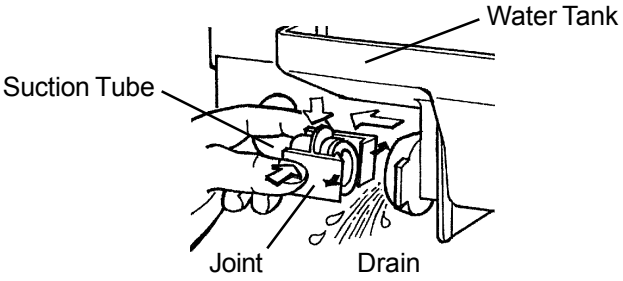

7) Spread out the tabs on both sides to unlock the water tank, and pull it out toward you. Soak the water tank in the sanitizing solution for 10 minutes.

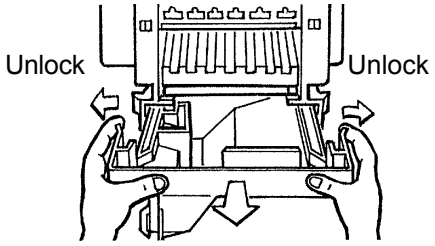

8) Lift off the ice chute from the front frame pipe and then from the rear frame pipe. Soak the ice chute in the sanitizing solution for 10 minutes.

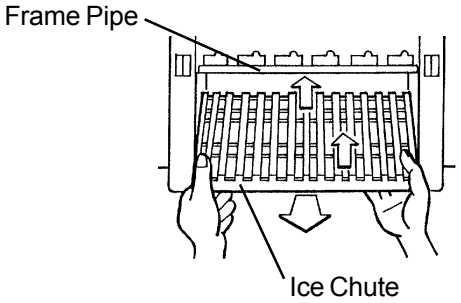

9) Pull the discharge tube from the spray assembly. Remove the assembly by pulling it toward you.

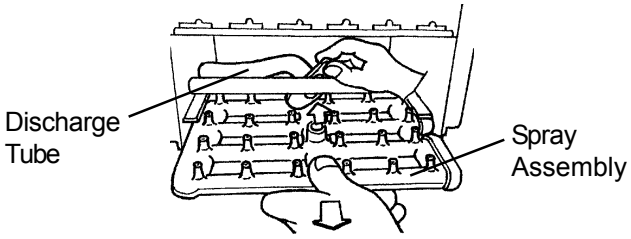

10) Remove the two caps. Soak the caps and the spray assembly in the sanitizing solution for 10 minutes. If the nozzles are clogged, clean them with a wire or a suitable brush.

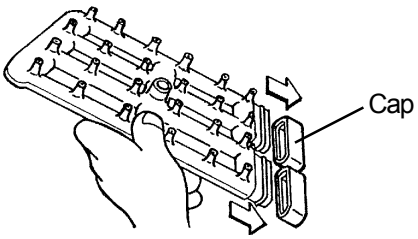

11) Refit the two caps in their correct positions. Make sure the reducing pipe is in place in the center.

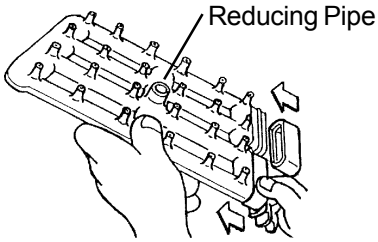

12) Slide in the spray assembly along the rails on the right and left brackets. Refit the discharge tube securely on the spray assembly. A loose fitting may cause a water leak.

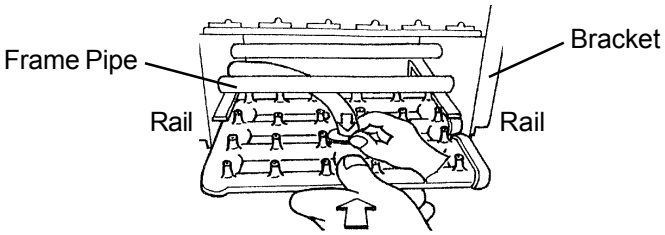

13) Position and lock the ice chute onto the front and rear frame pipes by pushing the chute down until it clicks onto both pipes.

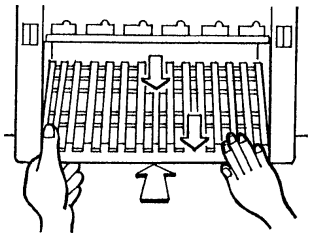

14) Slide in the water tank along the rails at the bottom of the right and left brackets until it clicks into place.

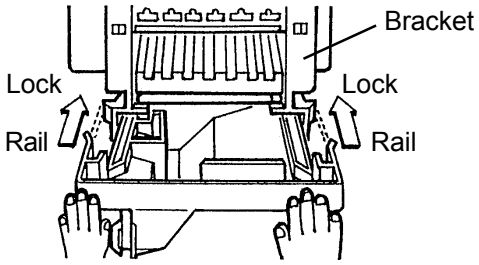

15) Refit the suction tube onto the water tank inlet by pushing the joint to lock it securely in the direction of the arrows. A loose fitting may cause a water leak.

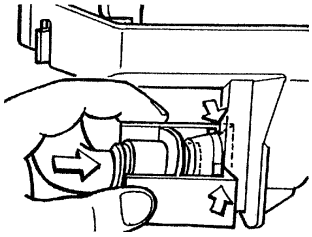

16) Hook each separator onto the rail, and pull it hard toward you until it locks in place with a click. Refit all the separators in the same way.

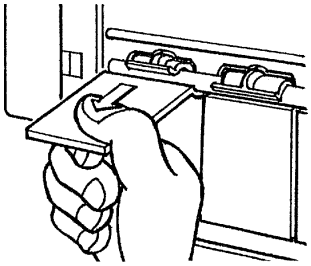

17) Refit the slope in its correct position.

18) Close the water supply line shut-off valve.

19) Discard the sanitizing solution.

20) Mix a new batch of the sanitizing solution and slowly pour it into the water tank.

21) Move the control switch to the “WASH" position.

22) After circulating the sanitizing solution for about 15 minutes, move the control switch to the “OFF" position.

23) Disconnect the suction tube by compressing both plastic tabs to unlock the joint in the direction of the black arrows and pulling the tube clear.

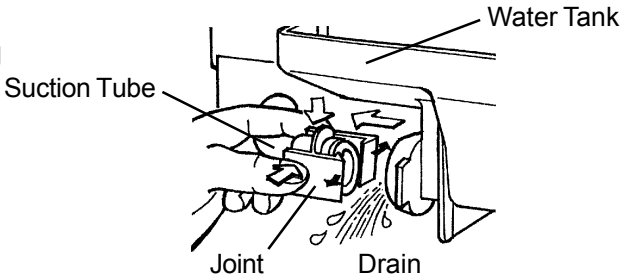

24) Spread out the tabs on both sides of the water tank to unlock it, then pull it out toward you. Drain the tank.

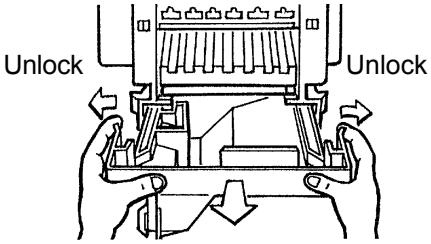

25) After draining, slide in the water tank along the rails at the bottom of the right and left brackets until it clicks into place.

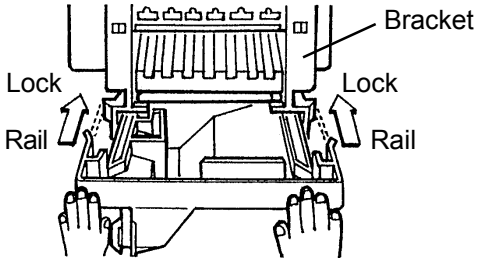

26) Refit the suction tube onto the water tank inlet by pushing the joint to lock it securely in the direction of the arrows. A loose fitting may cause a water leak.

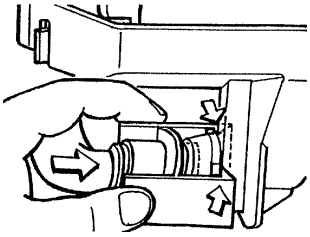

27) Repeat 20) through 26) one time.

28) Open the water supply line shut-off valve.

29) Move the control switch to the “WASH" position to circulate clean water for about 5 minutes.

30) Move the control switch to the “OFF" position, then remove the water tank, drain it, and replace it as described in 23) through 26).

31) Repeat 29) and 30) two more times to rinse thoroughly.

32) Move the control switch to the “ICE" position, and start the automatic icemaking process.

2. Maintenance

IMPORTANT

This icemaker must be maintained individually, referring to the instruction manual and labels provided with the icemaker.

1) Exterior

To keep the exterior clean, wipe occasionally with a clean and soft cloth. Use a damp cloth containing a neutral cleaner to wipe off all oil or dirt build-up.

2) Condenser

Check the condenser once a year, and clean if required by using a brush or vacuum cleaner. More frequent cleaning may be required depending on the location of the icemaker.

3. Water Valve

1) Unplug the icemaker or disconnect the power source.

2) Close the water supply shut-off valve.

3) Remove the door and top panel.

4) Disconnect the water supply inlet from the water valve.

5) Remove the mesh filter from the water valve.

6) Clean the mesh using a brush.

7) Refit the mesh and water supply inlet in their correct positions.

8) Open the water supply shut-off valve.

9) Plug in the icemaker or connect the power source.

10) Check for leaks.

11) Refit the panels in their correct positions.

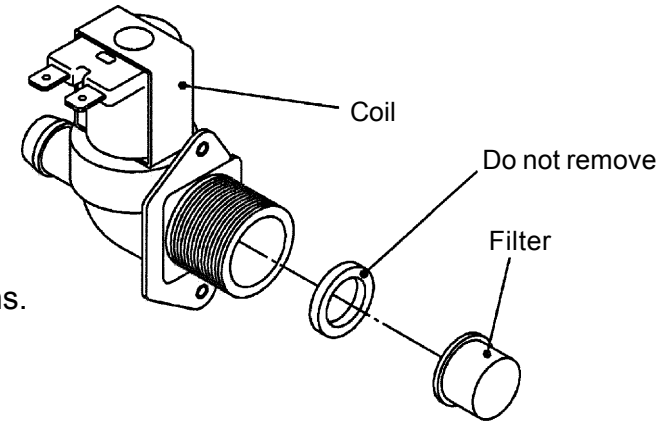

Fig. 7

V. Technical Information

1. Water Circuit and Refrigerant Circuit

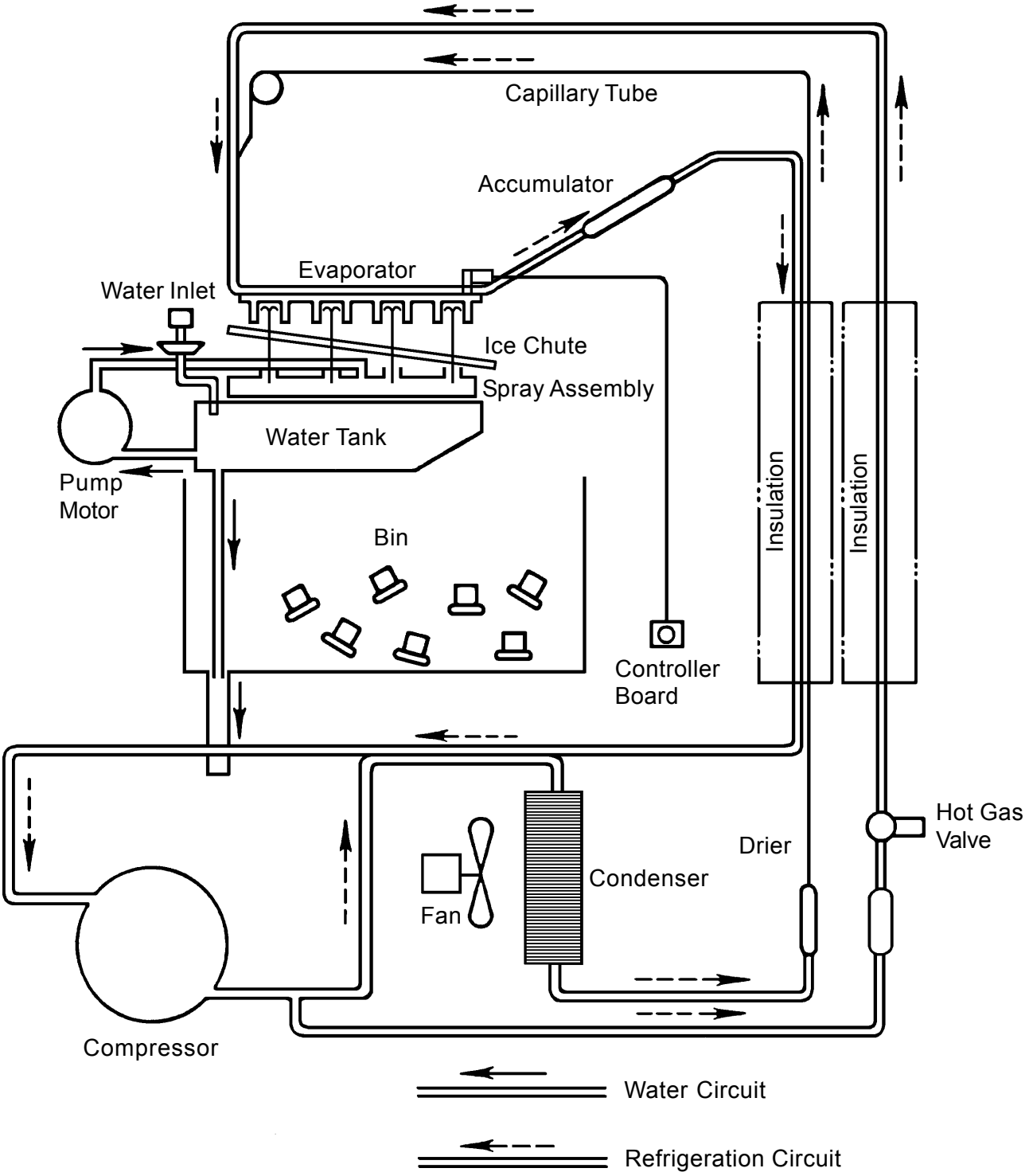

U1VA6060209

2. Wiring Diagram

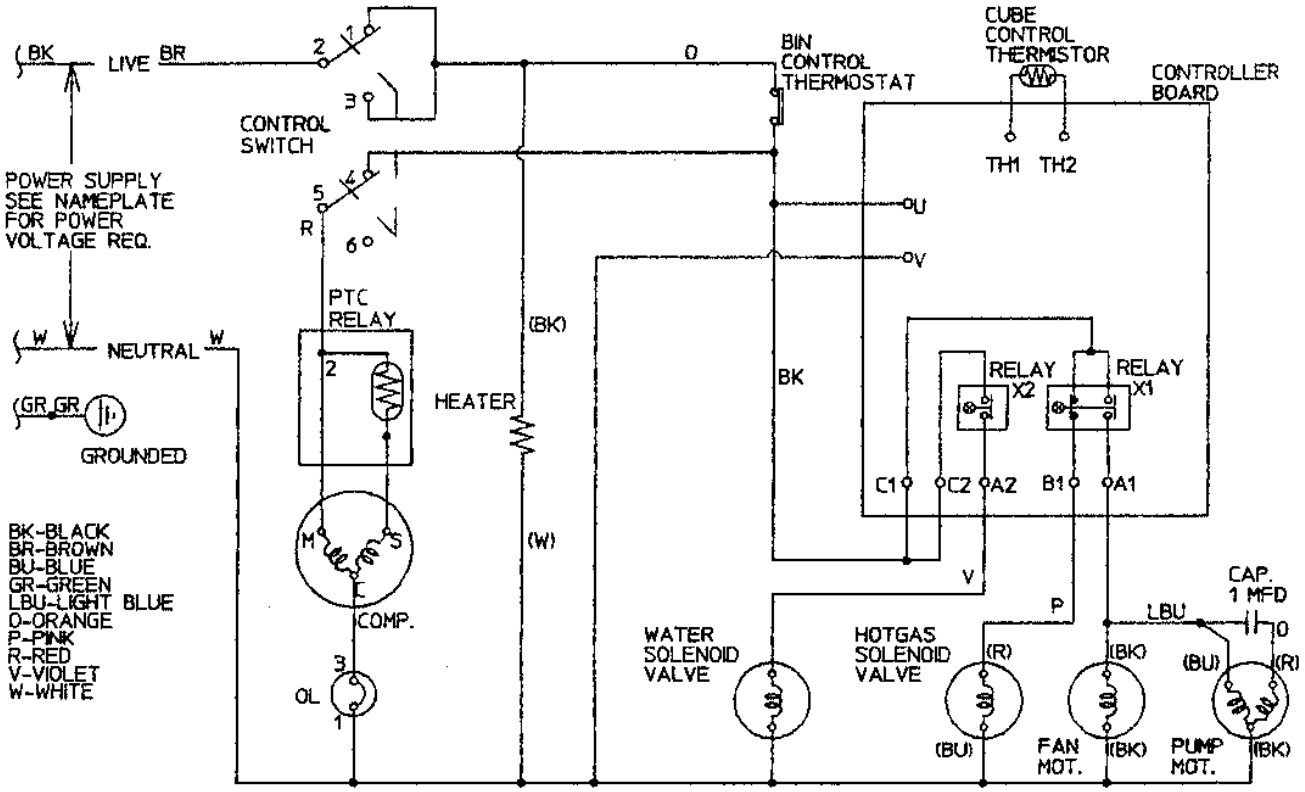

3. Controls

[a] Icemaking Control

The freeze and defrost cycles are controlled by the combination of a thermistor and an electronic controller.
When the evaporator cools down to a specific temperature (around +28°F (-2°C)), the thermistor attached to the evaporator senses the temperature and signals to the electronic controller. After the built-in timer counts 10 minutes from the signal input, the controller switches the contact of the built-in relays (X1 and X2) to stop the pump motor and fan motor and to open the hot gas valve and water valve. This completes the freeze cycle and starts the defrost cycle.

[b] Defrost Control

The ice cubes formed inside the icemaking cells are released by hot gas warming the evaporator. When a small portion of the ice melts on the icemaking cell interior, the ice drops by its own weight and slides down the ice guide into the storage bin. When the evaporator is warmed further (to around +45°F (+7°C)), the thermistor senses the temperature rise and signals to the electronic controller. After the built-in timer counts 50 seconds from the signal input, the controller switches the contact of the built-in relays to start the pump motor and fan motor and to close the hot gas valve and water valve. This completes the defrost cycle and starts the freeze cycle.
At low temperature conditions where the defrost cycle exceeds 3 minutes, the water valve will close after 3 minutes.
In the initial cycle at startup or after shutdown for bin control, water is supplied for 80 seconds. This means the water valve closes (approx. 30 seconds) after the freeze cycle starts.

[c] No Adjustment Required

The thermistor and electronic controller are factory adjusted to produce constant ice all the year around, not affected by changes in the ambient and water temperatures.
No adjustment is required for any frequency 50/60Hz or ambient temperature.

[d] Before Checking the Electronic Controller

Check the power source voltage and the thermistor as shown in the table below.

Component	Procedure	Normal
Thermistor (on evaporator) 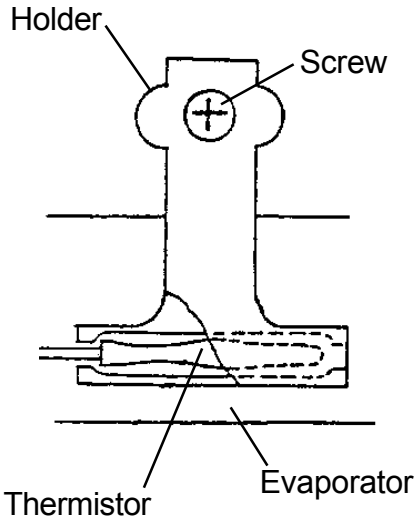 	**CAUTION** Thermistor sensor part is fragile, glass sealed. Handle with care. * Disconnect the thermistor on the board. * Remove the screw and the thermistor holder on the evaporator. * Immerse the sensor part in a glass containing ice and water for 5 minutes. * Check the resistance between terminals of the thermistor. * Replace the thermistor in its correct position. * Connect the thermistor.	5.5 - 6.5 kΩ

[e] Adjustment at Part Replacement

The thermistor and electronic controller are designed for optimum ice production. If adjustment is desired at part replacement, follow the instructions below.

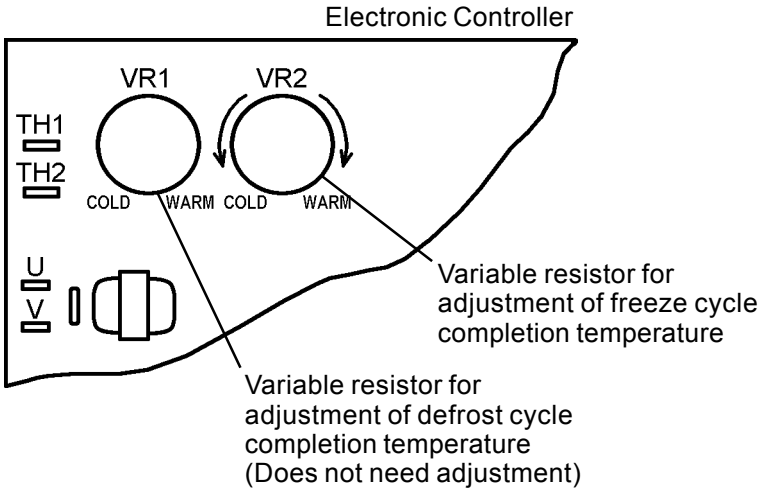

Fig. 8

The variable resistor VR1 is for a fine adjustment of the defrost cycle completion temperature. It needs no adjustment at part replacement.

The variable resistor VR2 is for a fine adjustment of the freeze cycle completion temperature. Turn VR2 clockwise for a higher temperature (WARM), i.e. ice cubes with larger diameter holes and counterclockwise for a lower temperature (COLD), i.e. ice cubes with smaller diameter holes.

Note: Do not adjust VR2 to the lowest temperature. It will cause excessive ice production resulting in defrost failure.

4. Timing Chart

5. Performance Data

[a] AM-50BAE

APPROXIMATE ICE PRODUCTION PER 24 HR.	AMBIENT TEMP. (°F/°C)	WATER TEMP. (°F/°C) 50/10		70/21		90/32	
	70/21	**51**	23	46	21	43	19
	80/27	47	22	40	18	38	17
	90/32	46	21	**35**	16	32	14
lbs./day kg./day	100/38	40	18	34	15	29	13
APPROXIMATE ELECTRIC CONSUMPTION	70/21	**222**		228		235	
	80/27	227		237		242	
	90/32	228		**244**		250	
watts	100/38	237		246		255	
APPROXIMATE WATER CONSUMPTION PER 24 HR.	70/21	**44**	0.17	38	0.14	33	0.12
	80/27	39	0.15	31	0.12	27	0.10
	90/32	38	0.14	**24**	0.09	20	0.08
gal./day m^3/day	100/38	31	0.12	23	0.09	16	0.06
FREEZING CYCLE TIME	70/21	**16**		19		23	
	80/27	18		21		26	
	90/32	19		**24**		29	
min.	100/38	25		29		33	
HARVEST CYCLE TIME	70/21	**3.1**		2		2	
	80/27	3		2		2	
	90/32	3		**2.4**		2	
min.	100/38	3		2		2.1	
HEAD PRESSURE	70/21	**140**	9.8	152	10.7	175	12.3
	80/27	149	10.5	167	11.8	194	13.7
	90/32	152	10.7	**180**	12.7	206	14.5
PSIG kg/cm^2G	100/38	159	11.2	186	13.1	230	16.2
SUCTION PRESSURE	70/21	**15**	1.1	16	1.2	19	1.3
	80/27	16	1.1	18	1.3	21	1.5
	90/32	16	1.2	**20**	1.4	23	1.6
PSIG kg/cm^2G	100/38	17	1.2	21	1.4	**25**	1.8

TOTAL HEAT OF REJECTION FROM CONDENSER 1850 BTU/h [AT 90°F (32°C) / WT 70°F (21°C)]

Note: Pressure data is recorded at 5 minutes into freezing cycle.
The data not in **bold** should be used for reference only.

We reserve the right to make changes in specifications and design without prior notice.

[b] AM-50BAE-AD

APPROXIMATE ICE PRODUCTION PER 24 HR.	AMBIENT TEMP. (ºF/ºC)	WATER TEMP. (ºF/ºC) 50/10		70/21		90/32	
	70/21	**55**	25	49	22	46	21
	80/27	50	23	41	19	41	19
	90/32	49	22	**34**	15	33	15
lbs./day kg./day	100/38	42	19	34	15	32	15
APPROXIMATE ELECTRIC CONSUMPTION	70/21	**227**		230		237	
	80/27	229		234		243	
	90/32	230		**238**		246	
watts	100/38	236		240		253	
APPROXIMATE WATER CONSUMPTION PER 24 HR.	70/21	**30**	0.11	27	0.10	24	0.09
	80/27	28	0.11	24	0.09	22	0.08
	90/32	27	0.10	**22**	0.08	19	0.08
gal./day m^3/day	100/38	24	0.09	21	0.08	17	0.06
FREEZING CYCLE TIME	70/21	**15**		17		20	
	80/27	16		19		23	
	90/32	17		**21**		25	
min.	100/38	20		22		29	
HARVEST CYCLE TIME	70/21	**2.5**		2.5		2.5	
	80/27	2.5		2		2	
	90/32	2		**2**		2	
min.	100/38	2		2		2	
HEAD PRESSURE	70/21	**145**	10.2	161	11.3	182	12.8
	80/27	157	11.0	182	12.8	202	14.2
	90/32	161	11.3	**200**	14.1	221	15.5
PSIG kg/cm^2G	100/38	165	11.6	205	14.4	240	16.9
SUCTION PRESSURE	70/21	**18**	1.3	22	1.5	25	1.8
	80/27	21	1.5	26	1.8	28	2.0
	90/32	22	1.5	**30**	2.1	33	2.3
PSIG kg/cm^2G	100/38	22	1.5	31	2.2	**35**	2.5

TOTAL HEAT OF REJECTION FROM CONDENSER 1850 BTU/h [AT 90ºF (32ºC) / WT 70ºF (21ºC)]

Note: Pressure data is recorded at 5 minutes into freezing cycle.
The data not in **bold** should be used for reference only.

We reserve the right to make changes in specifications and design without prior notice.

VI. Service Diagnosis

PROBLEM	CHECK	POSSIBLE CAUSE	REMEDY
[1] The icemaker will not start	a) Power Cord	1. Loose connections	1. Tighten
		2. Open circuit-damaged	2. Repair or replace
	b) Power Switch	1. "OFF" position	1. Move to "ICE" position
		2. Loose connections	2. Tighten
		3. Bad contacts	3. Check for continuity and replace
	c) Supply Voltage	1. Too low	1. Rearrange power supply connection to get enough capacity
		2. Power supply shared with other equipment	2. Rearrange power supply connection to get enough capacity
	d) Bin Control Thermostat	1. Ambient temperature too cool	1. Increase ambient temperature
		2. Bad contacts or leaks in bulb	2. Check for continuity and replace
	e) Heater	1. Open circuit-damaged at low ambient temperature	2. Check for continuity and replace
[2] Compressor will not start	a) Compressor	1. Wiring to compressor	1. Check for loose connection or open, and replace
		2. Coil winding opened	2. Check for continuity between terminals and replace
	b) Protector	1. Bad contacts	1. Check for continuity and replace
	c) Starter	1. Bad contacts	1. Check for continuity and replace
[3] Fan motor or pump motor will not run	a) Wiring	1. Loose connections or broken wire	1. Repair or replace
	b) Fan Motor, Pump Motor	1. Coil winding opened	1. Replace
	c) Fan Blade	1. Fan blade bound	1. Check and replace
	d) Pump Motor Impeller	1. Defective or bound impeller	1. Replace and clean
	e) Pump Motor Capacitor	1. Defective	1. Replace
	f) Electronic Controller	1. Defective	1. Replace
[4] Defrost cycle time is too long	a) Thermistor	1. Out of position or loose attachment	1. See "VII.10. Thermistor for Cube Control"
		2. Loose connections	2. Repair
	b) Electronic Controller	1. Defective	1. Replace
[5] Hot gas valve will not open	a) Wiring	1. Loose connectors or broken wire	1. Repair or replace
	b) Hot Gas Valve	1. Coil winding opened	1. Replace

PROBLEM	CHECK	POSSIBLE CAUSE	REMEDY
[6] Water will not be supplied	a) Water Supply	1. Cut off	1. Turn off power supply and wait for recovery
		2. Shut-off Valve or water tap closed	2. Open
	b) Water Valve	1. Filter clogged	1. See "IV.3. Water Valve"
		2. Coil winding opened	2. Replace
[7] Water continues to be supplied in freeze cycle	a) Water Valve	1. Diaphragm does not close	1. Check for water leaks with icemaker off
	b) Electronic Controller	1. Defective	1. Replace
[8] No water comes from water tank	a) Wiring to Pump Motor	1. Loose connectors or broken wire	1. Repair or replace
	b) Pump Motor	1. Coil winding opened	1. Replace
	c) Pump Motor Impeller	1. Defective or bound impeller	1. Replace and clean
	d) Pump Motor Capacitor	1. Defective	1. Replace
	e) Water System	1. Water leaks	1.Check connections for water leaks and repair
		2. Clogged	2. See "IV.1. Cleaning and Sanitizing Instructions"
	f) Water Supply Line	1. Water pressure too low and water level in water tank too low	1. Check for recommended pressure
[9] All components run but no ice is produced	a) Water System	1. Water leaks	1. Check connections for water leaks and repair
		2. Clogged	2. See "IV.1. Cleaning and Sanitizing Instructions"
	b) Nozzle	1. Clogged	1. See "IV.1. Cleaning and Sanitizing Instructions"
		2. Misaligned nozzle and water tank	2. Place in correct position
	a) Refrigerant Circuit	1. Gas leak	1. Check with a leak detector. Weld, vacuum and recharge. Replace the refrigerant drier.
		2. Undercharged	2. Check for leaks and recharge.
		3. Air or moisture trapped	3. Replace drier & recharge
	b) Compressor	1. Defective valve	1. Replace compressor
	c) Hot Gas Valve	1. Continues to open in freeze cycle	1. Check and replace
	d) Water Valve	1. Stuck open	1. Clean or replace
[10] Large-hole cubes	a) Ambient temperature	1. Low	1. No problem. Low ambient temperature results in ice cubes with slightly larger diameter holes.
	b) Electronic Controller	1. Built-in timer does not count 10 min	1. Replace

PROBLEM	CHECK	POSSIBLE CAUSE	REMEDY
[11] Cloudy cubes	a) Water Quality	1. High hardness or contains impurities.	1. Install a water filter or scale treatment
	b) Nozzle	1. Clogged	1. See "IV.1. Cleaning and Sanitizing Instructions"
		2. Misaligned nozzle and water tank	2. Place in correct position
	c) Water System	1. Scaled up	1. Clean or remove scale
		2. Water leaks	2.Check connections for water leaks and repair
[12] Freeze cycle time is too long	a) Ambient temperature	1. Too high (freeze cycle will be extremely long at more than 40°C)	1. Check for recommended ambient temperature
	b) Air Inlet / Outlet (bottom front)	1. Blocked. Bad air circulation greatly reduces ice production capacity of built-in condenser types.	1. Unblock. See "III.2. Location"
	c) Thermistor	1. Out of position or loose attachment	1. See "VII.10. Thermistor for Cube Control"
		2. Leads short-circuit	2. See "V.3.[d] Before Checking Electronic Controller"
	d) Refrigerant Circuit	1. Gas leak	1. Check with a leak detector. Weld, vacuum and recharge. Replace the refrigerant drier.
		2. Undercharged	2. Check for leaks and recharge.
	e) Fan Motor	1. See [3]	
	f) Condenser	1. Clogged	1. Clean
[13] Icemaker will not stop when bin is filled with ice	a) Bin Control Thermostat	1. Fused contacts	1. Replace
[14] Abnormal ice	a) Nozzle	1. Clogged	1. See "IV.1. Cleaning and Sanitizing Instructions"
		2. Misaligned nozzle and water tank	2. Place in correct position
	b) Pump Motor	1. Bearing worn out	1. Replace
	c) Pump Motor Impeller	1. Defective or bound impeller	1. Replace and clean
	d) Compressor	1. Bearing worn out, or cylinder valve broken	1. Replace
		2. Mounting pad out of position	2. Reinstall
	e) Refrigerant Circuit	1. Rub or touch lines or other surfaces	1. Replace
[15] Some cells on the evaporator form no ice	a) Nozzle	1. Clogged	1. See "IV.1. Cleaning and Sanitizing Instructions"
		2. Misaligned nozzle and water tank	2. Place in correct position

VII. Removal and Replacement of Components

IMPORTANT

Ensure all components, fasteners and thumbscrews are securely in place after the equipment is serviced.

1. Service for Refrigerant Lines

[a] Service Information

1) Allowable Compressor Opening Time and Prevention of Lubricant Mixture [R134a]

The compressor must not be opened more than 30 minutes in replacement or service. Do not mix lubricants of different compressors even if both are charged with the same refrigerant, except when they use the same lubricant.

2) Treatment for Refrigerant Leak [R134a]

If a refrigerant leak occurs in the low side of an ice maker, air may be drawn in. Even if the low side pressure is higher than the atmospheric pressure in normal operation, a continuous refrigerant leak will eventually reduce the low side pressure below the atmospheric pressure and will cause air suction. Air contains a large amount of moisture, and ester oil easily absorbs a lot of moisture. If an icemaker charged with R134a has possibly drawn in air, the drier must be replaced. Be sure to use a drier designed for R134a.

3) Handling of Handy Flux [R134a]

Repair of the refrigerant circuit requires brazing. It is no problem to use the same handy flux that is used for the current refrigerants. However, its entrance into the refrigerant circuit should be avoided as much as possible.

4) Oil for Processing of Copper Tubing [R134a]

When processing the copper tubing for service, wipe off oil, if any used, by using alcohol or the like. Do not use too much oil or let it into the tubing, as wax contained in the oil will clog the capillary tubing.

5) Service Parts for R134a

Some parts used for refrigerants other than R134a are similar to those for R134a. But never use any parts unless they are specified for R134a because their endurance against the refrigerant have not been evaluated. Also, for R134a, do not use any parts that have been used for other refrigerants. Otherwise, wax and chlorine remaining on the parts may adversely affect R134a.

6) Replacement Copper Tubing [R134a]

The copper tubes currently in use are suitable for R134a. But do not use them if oily inside. The residual oil in copper tubes should be as little as possible. (Low residual oil type copper tubes are used in the shipped units.)

7) Evacuation, Vacuum Pump and Refrigerant Charge [R134a]

Never allow the oil in the vacuum pump to flow backward. The vacuum level and vacuum pump may be the same as those for current refrigerants. However, the rubber hose and gauge manifold to be used for evacuation and refrigerant charge should be exclusively for R134a.

8) Refrigerant Leak Check

Refrigerant leaks can be detected by charging the unit with a little refrigerant, raising the pressure with nitrogen and using an electronic detector. Do not use air or oxygen instead of nitrogen for this purpose, or rise in pressure as well as in temperature may cause R134a to suddenly react with oxygen and explode. Be sure to use nitrogen to prevent explosion.

[b] Refrigerant Recovery

The refrigerant must be recovered if required by an applicable law. No refrigerant access valve is provided in the unit. Install a proper access valve on the low-side line (ex. compressor process pipe). Recover the refrigerant from the access valve, and store it in a proper container. Do not discharge the refrigerant into the atmosphere.
When replacing the drier, take the opportunity to also fit a high-side access valve for ease of charging liquid refrigerant.

[c] Evacuation and Recharge

1) Attach charging hoses, a service manifold and a vacuum pump to the system. If possible, use quick release connectors onto the access valves (especially on the high side).

2) Turn on the vacuum pump.

3) Allow the vacuum pump to pull down to a 29.9” Hg (760 mm Hg) vacuum. Evacuating period depends on the pump capacity.

4) Close the low-side and high-side valves on the service manifold.

5) Disconnect the vacuum pump, and attach a refrigerant charging cylinder to accurately weigh in the liquid charge. Remember to purge any air from the charging hose. See the nameplate for the required refrigerant charge.

6) Open the high-side valve on the gauge manifold, and accurately measure in the liquid charge. Close the valve on the charging cylinder before closing the high-side manifold valve. Any remaining liquid in the line can be charged into the low side.

   Note: Always charge in the liquid stage, as many refrigerants are blends and vapor charging will affect the blend consistency (eg. R404A).

7) Turn on the icemaker. Release the high-side access connector, and allow pressure in the charging line to slowly enter the low side of the system. Cap off the high-side access valve. When pressure reduces on the low side, disconnect the low side charging line and cap off the access valve.

8) Always cap the access valves to prevent a refrigerant leak.

9) Always thoroughly leak test all joints and valve caps.

10) Avoid charging large quantities of liquid into the low side in case of damage to the compressor.

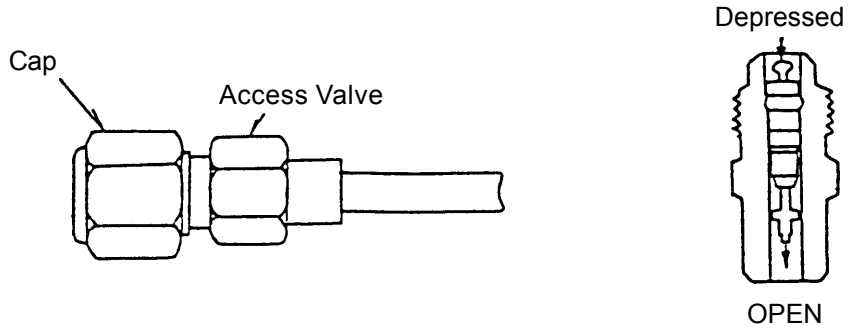

Fig. 9

2. Compressor

1) Unplug the icemaker or disconnect the power source.

2) Remove the rear panel, louver and front panel.

3) Recover the refrigerant and store it in a proper container, if required by an applicable law (See “1. [b] Refrigerant Recovery”).

4) Remove the terminal cover on the compressor, and disconnect solderless terminals.

5) Disconnect the discharge and suction pipes using brazing equipment.

6) Remove the hold-down bolts, washers and rubber grommets.

7) Slide and remove the compressor. Unpack the new compressor package.

8) Attach the rubber grommets of the previous compressor.

9) Clean the suction and discharge pipes with an abrasive cloth/paper.

10) Place the compressor in position, and secure it using the bolts and washers.

11) Remove plugs from the compressor suction and discharge pipes.

12) Braze or solder the access, suction and discharge lines (Do not change this order), with nitrogen gas flowing at a pressure of 3 to 4 psig (.21 to .28 bar).

13) Install the new drier (See “3. Drier”).

14) Check for leaks using nitrogen gas at 140 psig (9.65 bar) and soap bubbles.

15) Evacuate the system and charge it with refrigerant (See “1.[c] Evacuation and Recharge”).

16) Connect the solderless terminals and replace the terminal cover in its correct position.

17) Refit the panels in their correct positions.

18) Plug in the icemaker or connect the power source.

Note: Hoshizaki recommends that compressor starting components are always replaced at the same time as the compressor.

3. Drier

1) Unplug the icemaker or disconnect the power source.

2) Remove the rear panel, louver and front panel.

3) Recover the refrigerant and store it in a proper container, if required by an applicable law (See “1.[b] Refrigerant Recovery”).

4) Remove the drier holder, if any, and pull the drier towards you for easy service.

5) Remove the drier using brazing equipment.

6) Braze or solder the new drier, with the arrow on the drier in the direction of the refrigerant flow. Use nitrogen gas flowing at a pressure of 3 to 4 psig (.21 to .28 bar) when brazing tubings. Braze in an access valve using a tee if necessary.

7) Check for leaks using nitrogen gas at 140 psig (9.65 bar) and soap bubbles.

8) Evacuate the system and charge it with refrigerant (See “1.[c] Evacuation and Recharge”).

9) Refit the panels in their correct positions.

10) Plug in the icemaker or connect the power source.

Note: Always use a drier of the correct capacity and refrigerant type.

4. Evaporator

IMPORTANT

Always install a new drier every time the sealed refrigeration system is opened. Do not replace the drier until after all other repair or replacement has been made.

1) Unplug the icemaker or disconnect the power source.

2) Remove the rear panel, door, louver, top and front panels.

3) Recover the refrigerant and store it in a proper container, if required by an applicable law (See “1.[b] Refrigerant Recovery”).

4) Remove the water tank assembly, referring to “IV.1. Cleaning and Sanitizing Instructions.”

5) Remove the thermistor holder and thermistor from the evaporator.

6) Disconnect the solder connections on the evaporator using brazing equipment. Protect the surrounding components from heat damage.

7) Remove the four screws holding the evaporator.

8) Install the new evaporator, and secure it with the four original screws.

9) Remove and replace the drier (See “3. Drier”).

10) Braze pipes, with nitrogen gas flowing at a pressure of 3 to 4 psig (.21 to .28 bar).

11) Check for leaks using nitrogen gas at 140 psig (9.65 bar) and soap bubbles.

12) Refit the thermistor (See “10. Thermistor for Cube Control”).

13) Evacuate the system and charge it with refrigerant (See “1.[c] Evacuation and Recharge”).

14) Refit the panels in their correct positions.

15) Plug in the icemaker or connect the power source.

5. Hot Gas Valve

IMPORTANT

Always install a new drier every time the sealed refrigeration system is opened. Do not replace the drier until after all other repair or replacement has been made.

1) Unplug the icemaker or disconnect the power source.

2) Remove the rear panel, louver and front panel.

3) Recover the refrigerant and store it in a proper container, if required by an applicable law (See “1.[b] Refrigerant Recovery”).

4) Disconnect the hot gas valve leads.

5) Remove the screw and the solenoid coil.

6) Remove the valve and drier using brazing equipment.

7) Braze the new hot gas valve with nitrogen gas flowing at a pressure of 3 to 4 psig (.21 to .28 bar).

WARNING

Always protect the valve body by using a damp cloth to prevent the valve from overheating. Do not braze with the valve body exceeding 250°F (120°C).

8) Install the new drier (See “3. Drier”).

9) Check for leaks using nitrogen gas at 140 psig (9.65 bar) and soap bubbles.

10) Evacuate the system and charge it with refrigerant (See “1.[c] Evacuation and Recharge”).

11) Attach the solenoid coil to the valve body, and secure it with the screw.

12) Connect the leads.

13) Refit the panels in their correct positions.

14) Plug in the icemaker or connect the power source.

6. Pump Motor

1) Unplug the icemaker or disconnect the power source.

2) Remove the top panel, door and pipe cover (rear).

3) Disconnect the pump motor leads inside the pipe cover (rear).

4) Drain the water tank by compressing the plastic tabs on the suction tube to release the joint.

5) Spread the tabs on both sides of the water tank and pull it toward you.

6) Carefully remove the plastic housing by releasing the retaining screws.

7) Disconnect the pump suction and discharge tubings.

8) Release the pump retaining screws to remove the pump.

9) Install the new motor in the reverse order of the removal procedure.

10) Plug in the icemaker or connect the power source, and check for leaks.

11) Refit the panels in their correct positions.

7. Fan Motor

1) Unplug the icemaker or disconnect the power source.

2) Remove the louver and front panel.

3) Disconnect the connector of the fan motor.

4) Remove the fan motor bracket and the fan motor.

5) Cut the leads of the fan motor allowing enough lead length to reconnect using closed end connectors.

6) Install the new fan motor in the reverse order of the removal procedure.

7) Refit the panels in their correct positions.

9) Plug in the icemaker or connect the power source.

8. Water Valve

1) Close the water supply shut-off valve.

2) Unplug the icemaker or disconnect the power source.

3) Remove the door and top panel.

4) Disconnect the receptacle (leads) from the water valve.

5) Remove the valve outlet tubing.

6) Remove the water supply inlet and water valve by releasing the two retaining screws.

7) Install the new valve in the reverse order of the removal procedure.

8) Open the water supply shut-off valve.

9) Plug in the icemaker or connect the power source.

10) Check for leaks.

11) Refit the panels in their correct positions.

Note: When replacing parts, disassemble as shown in Fig. 7 (page 25) and replace the defective parts.

9. Controller Board

1) Unplug the icemaker or disconnect the power source.

2) Remove the louver and door.

3) Remove screws and the control box cover.

4) Pull out the control box from the machine compartment, and disconnect the connectors on the controller board.

5) Pull out and remove the controller board from the control box.

6) Install the new controller board and reassemble the control box in the reverse order of the removal procedure.

7) Refit the panels in their correct positions.

8) Plug in the icemaker or connect the power source.

10. Thermistor for Cube Control

1) Unplug the icemaker or disconnect the power source.

2) Remove the top and front panels, door, louver, pipe cover (rear) and control box cover.

3) Remove the connectors on the controller board, referring to “9. Controller Board.”

4) Unscrew and remove the thermistor holder and thermistor, located on the evaporator.

5) Install the new thermistor in the reverse order of the removal procedure, by using a sealant (high-thermal conductive type). See Fig. 10.

Note: Recommended sealant is KE4560RTV, manufactured by Shinetsu Silicon. When other type of sealant used, the cube size and performance will be changed. Do not use silicone sealant as this will insulate the thermistor.

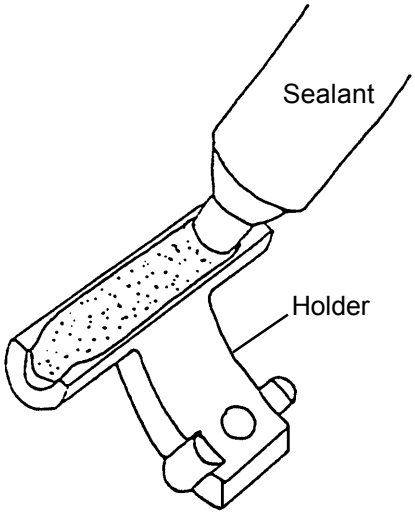

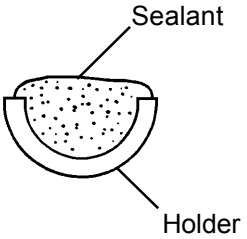

* Thermistor and Leads are FRAGILE.
HANDLE WITH CARE.

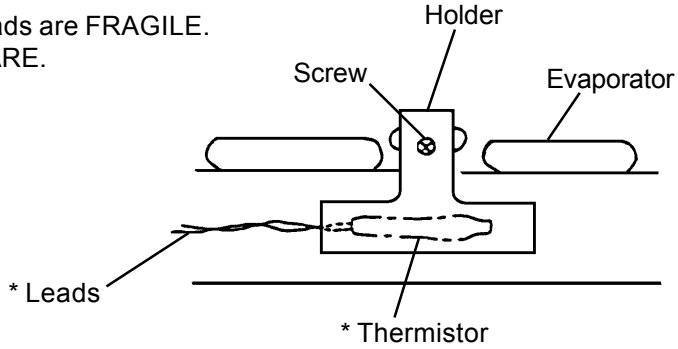

Fig. 10

U1VA6060209

11. Bin Control Thermostat

1) Unplug the icemaker or disconnect the power source.

2) Remove the top panel, door and pipe cover (rear).

3) Remove the thermostat holder from the storage bin, and disconnect the the bin control thermostat bulb.

4) Remove the bin control thermostat from the icemaker body (rear).

5) Cut off heater wires and splice new heater wires.

6) Install the new bin control thermostat in the reverse order of the removal procedure.

7) Refit the panels in their correct positions.

8) Plug in the icemaker or connect the power source.

HOSHIZAKI

HOSHIZAKI AMERICA, INC.
618 HIGHWAY 74 SOUTH
PEACHTREE CITY, GA 30269
U.S.A.
PHONE: 770-487-2331