A Division of Star Mfg. Int'l, Inc.

Installation, Operation, and Maintenance Instructions

Electric Full Size Convection Oven

Models:

ECOD-PT

ECOF-PT

Star Manufacturing International 10 Sunnen Drive St. Louis, MO 63143
Phone: 314-781-2777 Fax: 314-781-2714
WWW.STAR-MFG.COM

Part Number: 2M-W487
Rev A
October 14, 2009

THIS MANUAL MUST BE RETAINED FOR FUTURE REFERENCE. READ, UNDERSTAND AND FOLLOW THE INSTRUCTIONS AND WARNINGS CONTAINED IN THIS MANUAL.

FOR YOUR SAFETY

DO NOT STORE OR USE GASOLINE OR OTHER FLAMMABLE VAPORS AND LIQUIDS IN THE VICINITY OF THIS OR ANY OTHER APPLIANCE.

POST IN A PROMINENT LOCATION

INSTRUCTIONS TO BE FOLLOWED IN THE EVENT USER SMELLS GAS. THIS INFORMATION SHALL BE OBTAINED BY CONSULTING YOUR LOCAL GAS SUPPLIER. AS A MINIMUM, TURN OFF THE GAS AND CALL YOUR GAS COMPANY AND YOUR AUTHORIZED SERVICE AGENT. EVACUATE ALL PERSONNEL FROM THE AREA.

WARNING: IMPROPER INSTALLATION, ADJUSTMENT, ALTERATION, SERVICE OR MAINTENANCE CAN CAUSE PROPERTY DAMAGE, INJURY OR DEATH. READ THE INSTALLATION, OPERATING AND MAINTENANCE INSTRUCTIONS THOROUGHLY BEFORE INSTALLING OR SERVICING THIS EQUIPMENT.

Model #:	**Purchased From:**
Serial #:	**Location:**
Date Purchased:	**Date Installed:**
Purchase Order #:	**For Service, Call:**

Table of Contents

Chapter **Page**

Table Of Contents 3
Read First 4
Equipment Description 6
Unpacking 7
Installation 8
Initial Start-Up 11
Operation 12
Maintenance & Cleaning Procedures 16
Trouble Shooting 17
Parts List 19
Wiring Diagram 20

CAUTION: EACH UNIT WEIGHS 430 LBS. FOR SAFE HANDLING, INSTALLER SHOULD OBTAIN HELP AS NEEDED, OR EMPLOY APPROPRIATE MATERIALS HANDLING EQUIPMENT (SUCH AS A FORKLIFT, DOLLY, OR PALLET JACK) TO REMOVE THE UNIT FROM THE SKID AND MOVE IT TO THE PLACE OF INSTALLATION.

CAUTION: ANY STAND, COUNTER OR OTHER DEVICE ON WHICH OVEN WILL BE LOCATED MUST BE DESIGNED TO SUPPORT THE WEIGHT OF THE OVEN.

CAUTION: SHIPPING STRAPS ARE UNDER TENSION AND CAN SNAP BACK WHEN CUT.

DANGER: THIS APPLIANCE MUST BE GROUNDED AT THE TERMINAL PROVIDED. FAILURE TO GROUND THE APPLIANCE COULD RESULT IN ELECTROCUTION AND DEATH.

WARNING: INSTALLATION OF THE UNIT MUST BE DONE BY PERSONNEL QUALIFIED TO WORK WITH ELECTRICITY AND PLUMBING. IMPROPER INSTALLATION CAN CAUSE INJURY TO PERSONNEL AND/OR DAMAGE TO EQUIPMENT. UNIT MUST BE INSTALLED IN ACCORDANCE WITH ALL APPLICABLE CODES.

NOTICE: The data plate is located above control panel behind wire mesh screen. The oven voltage, wattage, serial number, wire size, and clearance specifications are on the data plate. This information should be carefully read and understood before proceeding with the installation.

NOTICE: The installation of any components such as a vent hood, grease extractors, fire extinguisher systems, must conform to their applicable National, State and locally recognized installation standards.

NOTICE: During the first few hours of operation you may notice a small amount of smoke coming off the oven, and a faint odor from the smoke. This is normal for a new oven and will disappear after the first few hours of use.

CAUTION: ALWAYS KEEP THE AREA NEAR THE APPLIANCE FREE FROM COMBUSTIBLE MATERIALS.

CAUTION: KEEP FLOOR IN FRONT OF EQUIPMENT CLEAN AND DRY. IF SPILLS OCCUR, CLEAN IMMEDIATELY, TO AVOID THE DANGER OF SLIPS OR FALLS.

WARNING: KEEP WATER AND SOLUTIONS OUT OF CONTROLS. NEVER SPRAY OR HOSE CONTROL CONSOLE, ELECTRICAL CONNECTIONS, ETC.

CAUTION: MOST CLEANERS ARE HARMFUL TO THE SKIN, EYES, MUCOUS MEMBRANES AND CLOTHING. PRECAUTIONS SHOULD BE TAKEN TO WEAR RUBBER GLOVES, GOGGLES OR FACE SHIELD AND PROTECTIVE CLOTHING. CAREFULLY READ THE WARNING AND FOLLOW THE DIRECTIONS ON THE LABEL OF THE CLEANER TO BE USED.

NOTICE: Never leave a chlorine sanitizer in contact with stainless steel surfaces longer than 10 minutes. Longer contact can cause corrosion.

NOTICE: Service on this, or any other, LANG appliance must be performed by qualified personnel only. Consult your LANG authorized service agent directory or call the factory at 1-800-807-9054, or WWW.STAR-MFG.COM for the service agent nearest you.

WARNING: BOTH HIGH AND LOW VOLTAGES ARE PRESENT INSIDE THIS APPLIANCE WHEN THE UNIT IS PLUGGED/WIRED INTO A LIVE RECEPTACLE. BEFORE REPLACING ANY PARTS, DISCONNECT THE UNIT FROM THE ELECTRIC POWER SUPPLY.

CAUTION: USE OF ANY REPLACEMENT PARTS OTHER THAN THOSE SUPPLIED BY LANG OR THEIR AUTHORIZED DISTRIBUTORS CAN CAUSE BODILY INJURY TO THE OPERATOR AND DAMAGE TO THE EQUIPMENT AND WILL VOID ALL WARRANTIES.

Equipment Description

Model: ECOD-PT

Exterior Construction

The oven exterior dimensions are 40” (100 cm) Wide, 27” (67.5 cm) High, 38” (95 cm) Deep. The Top, Front, Back, and Sides are constructed of stainless steel with an aluminized bottom.

The oven doors come standard with double pane windows.

The door handle is constructed of Stainless Steel and Phenolic Tubing.

The oven cavity is insulated with high temperature insulation for efficiency and reduced heat loss.

Interior Construction

The oven cavity dimensions are 29” (72.5 cm) Wide, 20” (50.84 cm) High, 21” (53.38 cm) Deep.

The interior of the oven is constructed of porcelainized stainless steel.

Operation

The ECOD-PT oven is a forced air convection oven with a vented oven cavity.

The air is driven by a 1/3 HP fan motor.

Controls

Icon driven (touch) panel allows for easy operation.

Complete computerized controls.

Pre-Programmable product selections.

Independent shelf timers for each shelf.

Load control through use of Cooking Curves.

Shelf compensation for uniform baking.

Solid state temperature sensing and controls.

Dual speed fan.

Manual override controls.

Technical

The ECOD-PT oven operates on either 208/240V or 480V. **This must be specified when ordering.**

Floor space required is 48” (122.6 cm) wide, 44” (112.5 cm) deep.

The oven weighs 430 lbs.

Unpacking

Receiving the Oven

Upon receipt, check for freight damage, both visible and concealed. Visible damage should be noted on the freight bill at the time of delivery and signed by the carrier's agent. Concealed loss or damage means loss or damage, which does not become apparent until the merchandise has been unpacked. If concealed loss or damage is discovered upon unpacking, make a written request for inspection by the carrier's agent within 15 days of delivery. All packing material should be kept for inspection. **Do not return damaged merchandise to STAR Manufacturing Company. File your claim with the carrier.**

Location

Prior to un-crating, move the oven as near to its intended location as practical. The crating will help protect the unit from the physical damage normally associated with moving it through hallways and doorways.

Un-crating

The oven will arrive completely assembled inside a wood frame and strapped to a skid. **Cut the straps and remove the wood frame.**

CAUTION: **THE OVEN WEIGHS 430 LBS. FOR SAFE HANDLING, INSTALLER SHOULD OBTAIN HELP AS NEEDED, OR EMPLOY APPROPRIATE MATERIALS HANDLING EQUIPMENT (SUCH AS A FORKLIFT, DOLLY, OR PALLET JACK) TO REMOVE THE UNIT FROM THE SKID AND MOVE IT TO THE PLACE OF INSTALLATION.**

CAUTION: **ANY STAND, COUNTER OR OTHER DEVICE ON WHICH THE OVEN WILL BE LOCATED MUST BE DESIGNED TO SUPPORT THE WEIGHT OF THE OVEN.**

CAUTION: **SHIPPING STRAPS ARE UNDER TENSION AND CAN SNAP BACK WHEN CUT.**

Remove Oven from skid and place in intended location.

DANGER: **THIS APPLIANCE MUST BE GROUNDED AT THE TERMINAL PROVIDED. FAILURE TO GROUND THE APPLIANCE COULD RESULT IN ELECTROCUTION AND DEATH.**

WARNING: **INSTALLATION OF THE UNIT MUST BE DONE BY PERSONNEL QUALIFIED TO WORK WITH ELECTRICITY AND PLUMBING. IMPROPER INSTALLATION CAN CAUSE INJURY TO PERSONNEL AND/OR DAMAGE TO EQUIPMENT. UNIT MUST BE INSTALLED IN ACCORDANCE WITH ALL APPLICABLE CODES.**

NOTICE: **The data plate is located above control panel behind wire mesh screen. The oven voltage, wattage, serial number, wire size, and clearance specifications are on the data plate. This information should be carefully read and understood before proceeding with the installation.**

NOTICE: **The installation of any components such as a vent hood, grease extractors, fire extinguisher systems, must conform to their applicable National, State and locally recognized installation standards.**

Leg Installation

Legs are available for both the single and double deck installations. Single deck installations require a 27-inch leg. Double deck installations require 6-inch legs or casters.

To install the 27-inch legs, place some cardboard on the floor and gently tip the oven onto its back. Fasten two legs to the oven's front corners using the four 5/16 inch bolts provided in the leg kit. Lift the oven onto its front legs and block the back up using one of the 27-inch legs set upside down in the center rear of the oven body. Install the last 27-inch leg onto the oven body on the control side rear. Gently lift the oven rear, remove the leg set to support the oven center and install it on the last rear corner.

To install the 6-inch legs or casters, follow the instructions in the Leg Pad section on the following pages or in the Leg Pad box supplied with the oven.

The adjustable feet on the bottom of each leg may be screwed in or out as necessary to level the oven.

A torpedo level placed on an oven rack will assist in leveling the oven.

Stacking the Ovens

Remove all the plug buttons from the top of the lower oven.

Remove the stacking kit from the oven compartment of one oven and install the 1 1/4-inch plastic bushing into the top of the lower oven.

Tip the top oven backwards and install two 3/8-inch socket head bolts, found in the stacking kit, into the two front leg holes that match the holes in the top of the lower oven. Install the socket head bolts with the heads of the bolt pointing away from the oven.

Lift the top oven and gently set on top of the lower oven so that the heads of the socket head bolts nest into the holes in the top of the lower oven.

Leg Pad Adapter

Identify the front and rear leg adapters (the front adapters have two threaded inserts, the rear has four).

Leg to Adapter Installation:

Install the leg's threaded stud through the hole in the adapter labeled "**C**" with the bent flange of the adapter facing away from the leg.

Screw the 3/4-inch nut supplied in the adapter kit onto the leg stud and tighten.

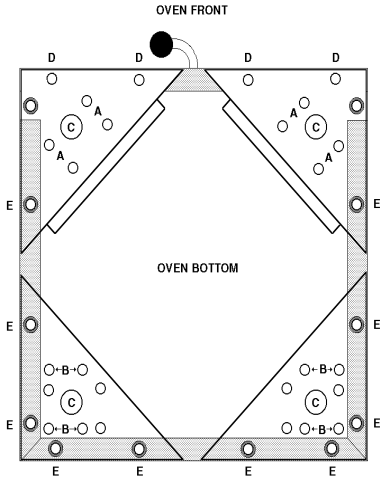

Caster to Adapter Installation:

Place the swivel caster against the front leg adapter with the flange of the adapter facing away from the caster.

Install the four 5/16 inch bolts through the caster base and the adapter holes labeled "**A**" then install the 5/16 inch nuts with washer and lock washers.

Place the rigid casters against the rear leg adapter with the flange of the adapter facing away from the caster.

Align the caster to the holes in the adapter labeled "**B**". NOTE: There are two sets of "**B**" holes set at 90° from the each other. One set will create a left rear adapter and the other set will create a right rear adapter.

Install four 5/16-inch bolts through the caster base and the adapter holes labeled "**B**" then install 5/16-inch nuts with lock washers and flat washers.

Adapter to Oven Installation:

Gently tip the oven onto its back. Place the front leg adapter into the front corers of the oven. The holes without the threaded inserts face the front of the oven and the flange on the adapter points toward the bottom of the oven.

The edge of the leg adapter with the threaded insert slips under the flange on the oven side, while the edge without the inserts sits on top of the threaded angle on the oven front.

Install two 3/8-inch bolts with lock washers and flat washers through the front holes "**D**" in the leg adapter and into the threaded inserts on the oven.

Thread one 3/8-inch bolt with lock washer and flat washer into the rear threaded hole labeled "**E**" on each of the leg adapters.

The forward threaded hole on the front leg adapter does not get a bolt installed.

Place the rear leg adapters into the rear corners of the oven so that the adapter is under the flange of the oven side and back. NOTE: If installing a caster place the adapter on the oven so that the casters roll forward.

Install for 3/8-inch bolts with lock washers and flat washers through the holes labeled "**E**" in the flange of the oven and into the threaded inserts of the leg adapter.

Ventilation and Clearances

Standard minimum clearance from combustible construction is as follows.

4” from side
4” from back
6” from floor

These ovens may be set directly, without legs, on a curbed base or **non-combustible** floor.

If the oven is set without legs on a **non-combustible** floor or a curbed base, maintain a 4-inch back clearance.

If the oven is set directly against a **non-combustible** back wall, maintain a 6-inch clearance to the floor.

Do not install the oven closer than 4 inches from another oven on the right hand side (control panel side).

Do not install the oven closer than 12 inches from an uncontrolled heat source (char broiler etc.) on the right side.

Keep the appliance area free and clear of combustible material and do not obstruct the flow of combustion or ventilation air.

The installation of any components such as a vent hood, grease extractors, and/or fire extinguisher systems, must conform to the there applicable nationally recognized installation standards.

Electrical Connection

The electrical service entrance is provided by a 1 1/4-inch knockout in the bottom right front corner of each oven, or at the oven back directly behind the control compartment. Grounding lugs are provided at both the front and rear service entrances.

The 208/240-volt oven is a dual voltage oven and is shipped from the factory as 208- volt. The oven must be field converted to operate on a 240-volt power supply.

To convert the oven to 240-volt, remove the panel above the power supply knock out at the back of the oven and toggle the switch to the 240-volt position.

With 480-volt installations, check to be sure that the motor rotates in a clockwise direction as viewed from the front of the oven.

To reverse the motor rotation, switch any two incoming power supply leads and recheck the rotation.

Supply wire size must be large enough to carry the amperage load for the number of ovens being installed. Wire size information can be found on the oven DATA PLATE.

This oven can be installed on both single and three-phase supplies and is shipped from the factory for three-phase.

To phase the oven to match the power supply, follow the charts on the Wiring Diagram located at the back of the Manual.

Initial Start Up

Pre-Power On

After the oven is installed and connected to power, prior to turning on, verify the following:

The doors open and close freely.
All racks are in the oven correctly.
All packing materials have been removed from the inside of the oven.

Power On

Once oven has been turned on, verify that the blower wheel is spinning freely in a clockwise position and that the elements are heating properly.

NOTICE: **During the first few hours of operation, you may notice a small amount of smoke coming off the oven, and a faint odor from the smoke. This is normal for a new oven and will disappear after the first few hours of use.**

Control Panel

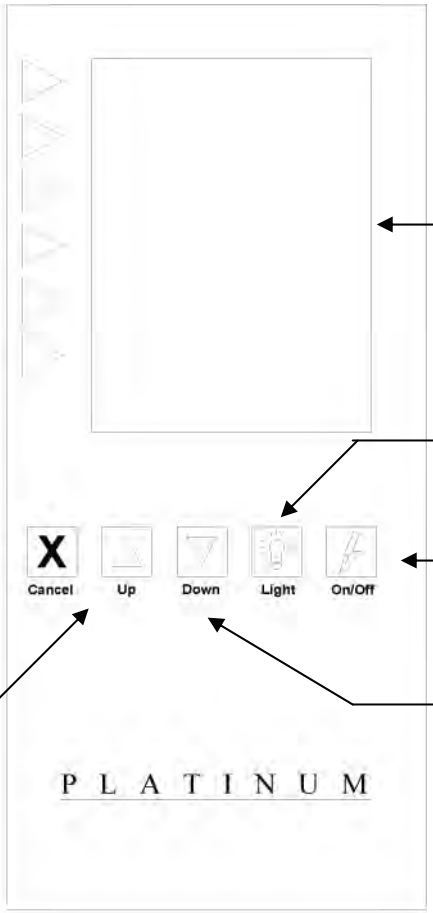

Function keys. Keys are active when a program option is displayed on display.

Alpha-Numeric Display.

Light switch. Inspection light only. Push for light to come on. Light will automatically turn off.

Cancel button. When scrolling through menu's this will allow you to back up to the previous menu. In program mode this will allow you to advance to the next step.

Power switch.

Arrow up button. Allows you to scroll up.

Arrow down button. Allows you to scroll down.

Typical Operation Sequence

ACTION	RESULT
Press the on switch.	Control panel comes on, display says **"LANG, Run Oven, Time Date Program**.
Select **"Run Oven".**	Display will show a list of product to choose.
Select Product button next to Icon desired.	Display says **"Preheating to XXXF".**
Beeper sounds briefly.	Display says **"Ready".**
Select Product to start.	Display shows possible product selection for that temperature.
Select Product to start.	Display says **"Select shelf".**
Press Product button next to desired shelf.	Display will show icon chosen and begin to count down.
Beeper sounds continuously.	Display shows **" DONE"** press button and remove product from that shelf.
Oven is ready for another product.	

Hints & Suggestions

Convection ovens constantly circulate air over and around the product. This strips away the thin layer of moisture and cool air from around the product allowing heat to penetrate more quickly.

Cooking times can be shortened and cooking temperatures can be reduced.

To convert standard deck oven recipes, reduce the temperature 50 degrees and the time by 25%. Make minor adjustments as necessary.

The lower the oven temperature the more even the bake.

Always weigh your product. This will give you a more consistent size, color and quality.

Check the product near the end of the initial cooking cycle by turning on the oven light and looking through the oven door windows.

Do not open the oven doors during baking, as this will change the baking characteristics of the oven and make it difficult to determine a final program.

If the product is overdone on the outside and underdone on the inside, reduce the baking temperature.

If the product is pulling away from the edge of the pan, the temperature is too high or the cooking time too long.

The convection is a mechanical piece of equipment. The same control settings will always give the same results. If the results vary, problems may be because of product preparation.

Loading

When loading and unloading the oven, stage products and racks so the oven doors are opened for the least amount of time.

Be sure that racks are level within the oven.

Bent or warped pans can greatly affect the evenness of the cook or bake.

If using baker's parchment, be sure the parchment does not blow over the product. This will create an uneven bake.

Load each shelf evenly. Spaces should be maintained equally between the pan and oven walls, front and back.

Do not overload pan's this will create an uneven bake.

For best baking results, load the oven from the center out during random loading.

CAUTION: **ALWAYS KEEP THE AREA NEAR THE APPLIANCE FREE FROM COMBUSTIBLE MATERIALS.**

CAUTION: **KEEP FLOOR IN FRONT OF EQUIPMENT CLEAN AND DRY. IF SPILLS OCCUR, CLEAN IMMEDIATELY, TO AVOID THE DANGER OF SLIPS OR FALLS.**

WARNING: **KEEP WATER AND SOLUTIONS OUT OF CONTROLS. NEVER SPRAY OR HOSE CONTROL CONSOLE.**

CAUTION: **MOST CLEANERS ARE HARMFUL TO THE SKIN, EYES, MUCOUS MEMBRANES AND CLOTHING. PRECAUTIONS SHOULD BE TAKEN TO WEAR RUBBER GLOVES, GOGGLES OR FACE SHIELD AND PROTECTIVE CLOTHING. CAREFULLY READ THE WARNING AND FOLLOW THE DIRECTIONS ON THE LABEL OF THE CLEANER TO BE USED.**

NOTICE: **Never leave a chlorine sanitizer in contact with stainless steel surfaces longer than 10 minutes. Longer contact can cause corrosion.**

Cleaning

Always start with a cold oven.
The stainless exterior can easily be cleaned using stainless steel cleaner
Always follow the cleaner manufacturer's instructions when using any cleaner.
Care should be taken to prevent caustic cleaning compounds from coming in contact with the blower wheel.
The oven racks, rack slides, and interior may be cleaned using oven cleaner.
Discoloration or heat tint may be removed using a Carbon Release oven cleaner.
The oven interior should be cleaned using a mild soap and a non-metal scouring pad. **DO NOT use caustic cleaners.**
Always apply these cleaners when the oven is cold and rub in the direction of the metal's grain.

Symptoms

What follows is a chart of Symptoms and Possible Causes to aid in diagnosing faults with the oven.
Refer to the Symptoms column to locate the type of failure then to the Possible Cause for the items to be checked.
To test for a possible causes refer to the TEST section and locate the Possible Cause then refer to test to identify test procedures.

Symptom	Possible Cause
Display will not come on	No power to cord outlet Oven unplugged from outlet Failed power cord or plug Contrast needs to be adjusted Failed display board
Oven will not heat	Power Switch is not “ON” Product not selected Failed Transformer Failed Probe Failed Circuit board Failed Contactor Failed Over-temperature Thermostat Failed Element
Oven motor will not run	Power Switch is not “ON” Product not selected Failed Transformer Failed Contactor Failed Motor Failed output on circuit board.
Product burning	Product is cooked too long Failed Probe Failed Circuit board
Product under done	Product is not cooking long enough Failed Probe Failed Circuit board

TESTS

NOTICE: **Service on this, or any other, LANG appliance must be performed by qualified personnel only. Consult your LANG authorized service agent directory or call the factory at 1-800-807-9054, or WWW.STAR-MFG.COM for the service agent nearest you.**

WARNING: **BOTH HIGH AND LOW VOLTAGES ARE PRESENT INSIDE THIS APPLIANCE WHEN THE UNIT IS PLUGGED/WIRED INTO A LIVE RECEPTACLE. BEFORE REPLACING ANY PARTS, DISCONNECT THE UNIT FROM THE ELECTRIC POWER SUPPLY.**

If an item on the list is followed by an asterisk (*), the work should be done by a factory authorized service representative.

Possible Cause	Test
Product is cooked too long	No test available, operational condition
Failed Probe	Check probe for proper resistance*
Failed Circuit board	Confirm that Circuit board is getting correct voltage and putting out correct voltage*
Failed Transformer	Check both Primary and Secondary coils for correct voltage*
Failed Contactor	Remove the wires from the contactor coil and check for continuity across the contactor coil connection* Ensure the contactor moveable points move freely up and down*
Failed Motor	Confirm that motor is getting correct voltage*
Failed or disconnected safety thermostat	Check across the thermostat connectors for continuity*
Failed Element	Confirm that Elements are getting correct voltage and have continuity*

CAUTION: **USE OF ANY REPLACEMENT PARTS OTHER THAN THOSE SUPPLIED BY STAR OR THEIR AUTHORIZED DISTRIBUTORS CAN CAUSE BODILY INJURY TO THE OPERATOR AND DAMAGE TO THE EQUIPMENT AND WILL VOID ALL WARRANTIES.**

Wiring Diagram 208/240

REVISION BLOCK						
REV	ECN NO.	DESCRIPTION	DR:	MFG	ENG	DATE
B		ADDED HI LIMIT CONTACTOR PER UL	TDV			4/1/09

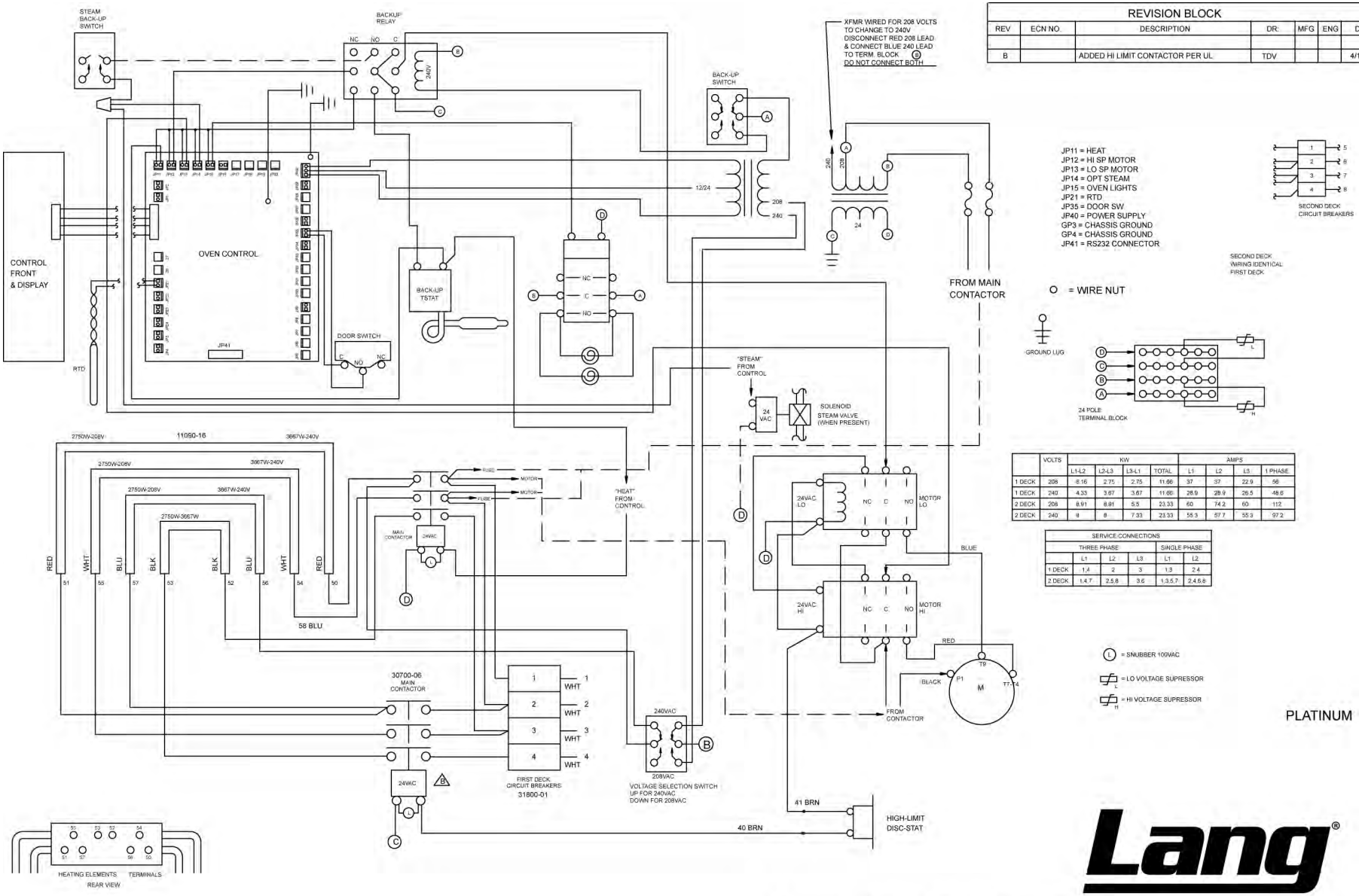

	VOLTS	KW				AMPS			
		L1-L2	L2-L3	L3-L1	TOTAL	L1	L2	L3	1 PHASE
1 DECK	208	8.16	2.75	2.75	11.66	37	37	22.9	56
1 DECK	240	4.33	3.67	3.67	11.66	28.9	28.9	26.5	48.6
2 DECK	208	8.91	8.91	5.5	23.33	60	74.2	60	112
2 DECK	240	8	8	7.33	23.33	55.3	67.7	55.3	97.2

SERVICE CONNECTIONS					
	THREE PHASE			SINGLE PHASE	
	L1	L2	L3	L1	L2
1 DECK	1,4	2	3	1,3	2,4
2 DECK	1,4,7	2,5,8	3,6	1,3,5,7	2,4,6,8

Model: ECCO-PT, 208/240VAC

2M-61111-143, Rev. B, 4/1/09

Wiring Diagram 480

REVISION BLOCK						
REV	ECN NO.	DESCRIPTION	DR:	MFG	ENG	DATE
C	7929	ADDED HI LIMIT CONTACTOR PER UL	JMM			6-12-09

JP11 = HEAT
JP12 = HI SP MOTOR
JP13 = LO SP MOTOR
JP14 = OPT STEAM
JP15 = OVEN LIGHTS
JP21 = RTD
JP35 = DOOR SW
JP40 = POWER SUPPLY
GP3 = CHASSIS GROUND
GP4 = CHASSIS GROUND
JP41 = RS232 CONNECTOR

L = LO V SUPRESSOR
H = HI V SUPRESSOR
L = 100V SNUBBER

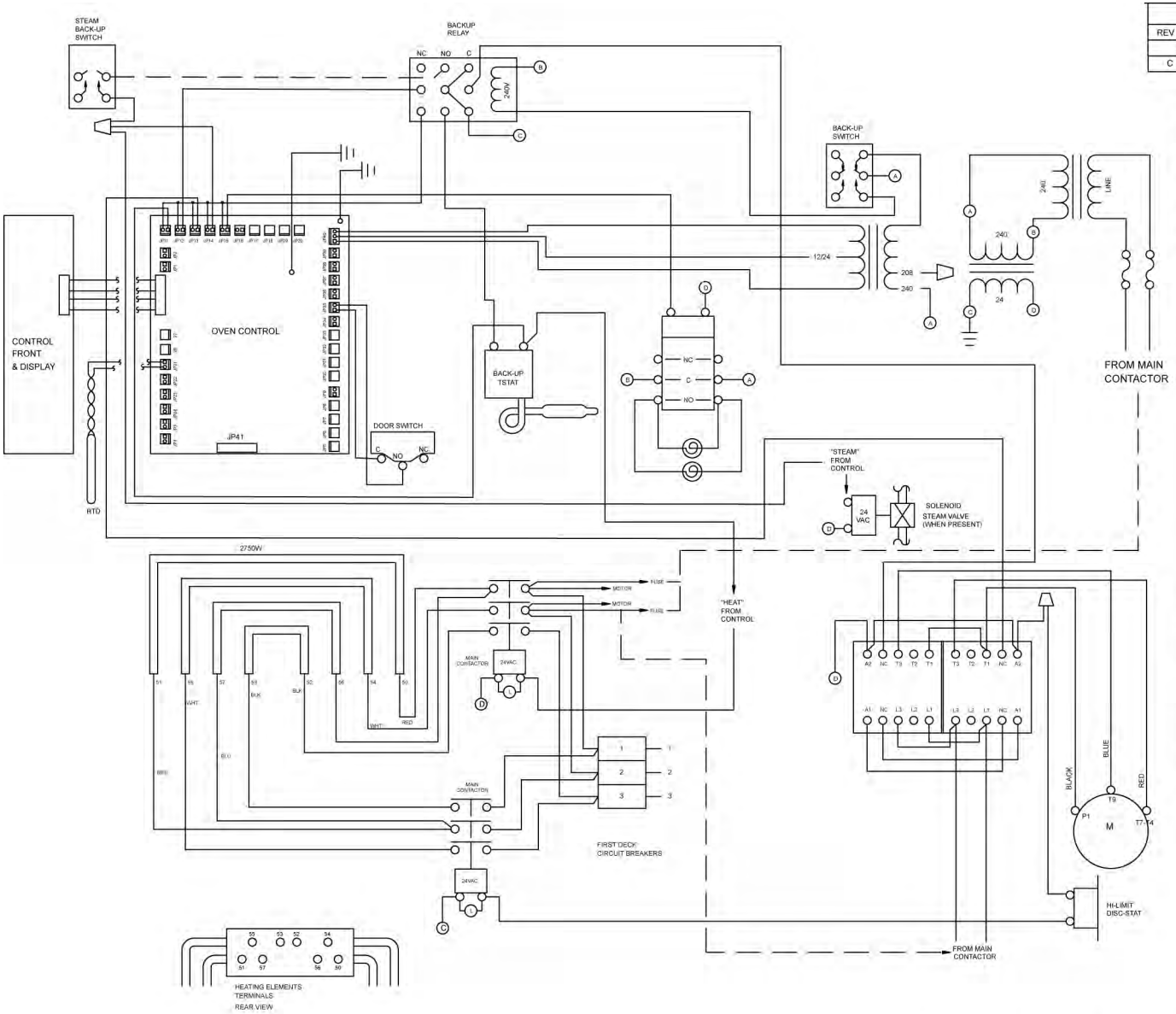

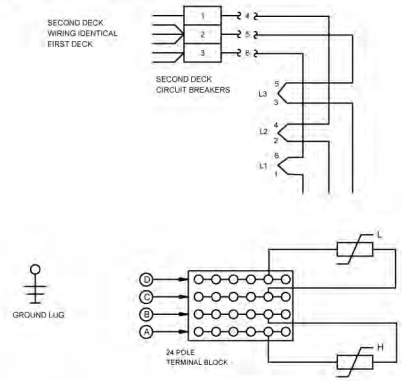

	VOLTS	KW				AMPS			
		L1-L2	L2-L3	L3-L1	TOTAL	L1	L2	L3	1 PHASE
1 DECK	480	6.0	2.7	2.7	11.5	15.8	15.8	10.0	N/A
1 DECK	380	6.0	2.7	2.7	11.5	19.7	19.7	17.2	N/A
2 DECK	480	8.7	8.7	5.4	23.0	25.8	31.6	25.8	N/A
2 DECK	380	8.7	8.7	5.4	23.0	32.1	39.5	32.1	N/A

SERVICE CONNECTIONS					
	THREE PHASE			SINGLE PHASE	
	L1	L2	L3	N/A	N/A
1 DECK	1	2	3	N/A	N/A
2 DECK	1-6	2-4	3-5	N/A	N/A

PLATINUM

Lang®

Model: ECCO-PT, 480, 380VAC

2M-61111-153, Rev. C, 6/12/09

Wiring Diagram 220/380 & 240/415

REVISION BLOCK						
REV	ECN NO.	DESCRIPTION	DR:	MFG	ENG	DATE
C	7831	ADDED HI LIMIT CONTACTOR PER UL	JMM			5-4-09

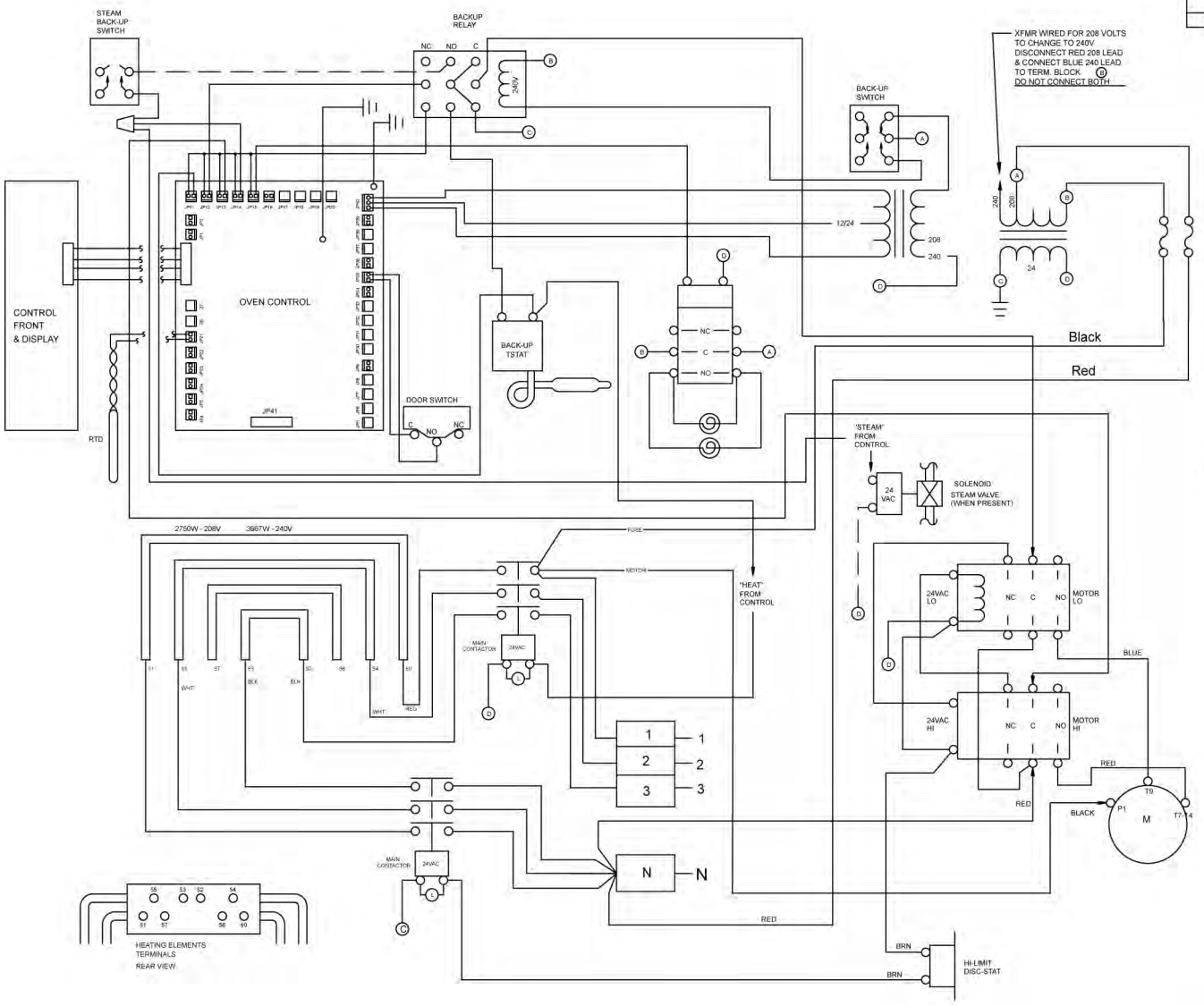

JP11 = HEAT
JP12 = HI SP MOTOR
JP13 = LO SP MOTOR
JP14 = OPT STEAM
JP15 = OVEN LIGHTS
JP21 = RTD
JP35 = DOOR SW
JP40 = POWER SUPPLY
GP3 = CHASSIS GROUND
GP4 = CHASSIS GROUND
JP41 = RS232 CONNECTOR

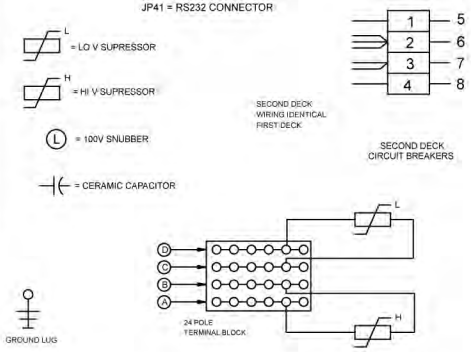

220/380-3 PH 4 WIRE 50 OR 60 HZ

	VOLTS	KILOWATTS				AMPS			
		L1-N	L2-N	L3-N	TOTAL	L1	L2	L3	N
1 DECK		3.7	3.1	3.1	9.9	16.8	14.1	14.1	16.8
2 DECK		4.3	3.8	3.8	11.9	28.9	28.7	28.7	28.9

240/415-3 PH 4 WIRE 50 OR 60 HZ

	VOLTS	KILOWATTS				AMPS			
		L1-N	L2-N	L3-N	TOTAL	L1	L2	L3	N
1 DECK		4.3	3.7	3.7	11.7	17.8	15.3	15.3	17.8
2 DECK		8	8	7.4	23.4	33.1	33.1	30.6	33.1

SERVICE CONNETIONS				
THREE PHASE				
	L1	L2	L3	N
1 DECK	1	2	3	N
2 DECK				

PLATINUM

Model: ECCO-PT, 220/380VAC & 240/415VAC

2M-61111-161, Rev. C, 5/4/09

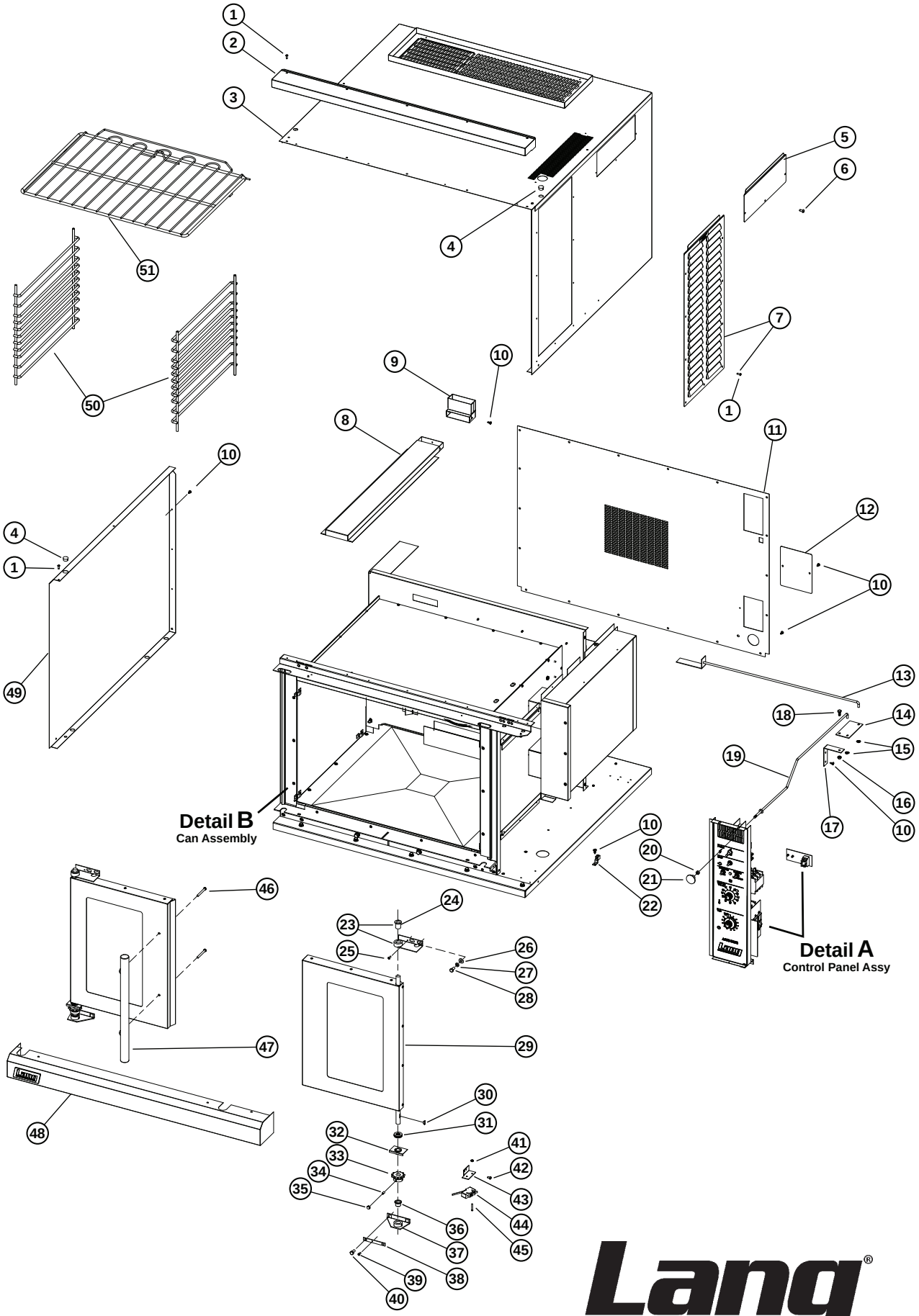

ECOF Main Assembly

Lang®

SK2366 Rev 4/21/2008

PARTS LIST

February 9, 2009

Model No: ECOF & ECOD Main Assembly
Commercial & Marine Full Size Electric Convection Oven

Key Number	Part Number	Qty Per	Description	
1	2C-20102-04	33	SCRW PHD ST 8-32X.5 PLTD	ECOF-ECOD
2	Q9-ECCO-230-1	1	TOP PANEL ASSEMBLY	ECOF-ECOD
3	Q9-ECCO-176-2	1	BODY SPOTWELD STD.	ECOF
4	2P-70901-06	2	PLGBTNBLKPLSTC 5/8DP625	ECOF-ECOD
5	Q9-ECCO-176-4	1	STM VALVE COVER	ECOF-ECOD
6	2C-20102-08	27	SCRW PHD ST 8-32X.375	ECOF-ECOD
7	Q9-60102-904	1	ACCESS COVER - ECCO/GCCO	ECOF-ECOD
8	Q9-ECCO-124	1	TOP VENT SPOTWELD	ECOF
9	Q9-ECCO-128	1	DAMPER BODY SPOTWELD	ECOF
10	2C-20103-02	3	SCRW SM PLT 10 X .5 PHLSL	ECOF-ECOD
11	Q9-ECCO-182-3	1	BODY BACK S/S W/MOTOR	ECOF-ECOD
12	Q9-ECCO-182-4	1	BODY BACK S/S COVER	ECOF-ECOD
13	Q9-ECCO-133	1	DAMPER ROD B WELD	ECOF-ECOD
14	Q9-ECCO-437	1	DAMPER PIVOT	ECOF-ECOD
15	2C-20602-02	1	TINNERMAN CLIP 1/4	ECOF-ECOD
16	2C-20301-20	1	NUT LOCK STOVER 1/4-20	ECOF-ECOD
17	Q9-ECCO-136	1	DAMPER BRACKET ANGLE	ECOF-ECOD
18	2C-20104-41	6	SCRW MACH. 1/4-20X5/8 H/H	ECOF-ECOD
19	Q9-ECCO-131	1	DAMPER ROD A WELD	ECOF
20	2C-20303-01	4	NUT HX SS 1/4-20	ECOF-ECOD
21	2R-70701-25	1	KNOB DAMPER BLACK PLAIN	ECOF-ECOD
22	2E-31200-02	1	LUG GROUNDING UL APPROVED	ECOF-ECOD
24	2P-70201-07	2	BRNZ BR FLN 5/8IDX3/4ODX1	ECOF-ECOD
25	2C-20115-01	78	SCRW S/S 8-32X1/2 P/H S/T	ECOF-ECOD
26	2C-20203-03	20	WSHR FLT SS 5/16 USS	ECOF-ECOD
27	2C-20204-06	14	WSHR S/S 5/16 SPLIT LOCK	ECOF-ECOD
28	2C-20111-07	14	SCRW SCKTHD 5/16-18X5/8	ECOF-ECOD
29	Q9-50312-43	1	RH DOOR ASSY E/GCCO	ECOF-ECOD
29	Q9-50312-44	1	LH DOOR ASSY E/GCCO	ECOF-ECOD
30	2C-71802-01	2	KEY WOODRUFF 3/16 X 5/8	ECOF-ECOD
31	2C-20201-15	10	WSHR FLT 960-C-1016 PLTD	ECOF-ECOD
32	Q9-50312-67	2	PIVOT BEARING ASSY	ECOF-ECOD
33	2P-73000-03	2	SST SPRKT40B11 5/8 BORE	ECOF-ECOD
34	2C-20105-04	1	SCRW SET 1/4-20X1/2	ECOF-ECOD
35	2C-20301-07	1	NUT ACORN 1/4-20 PLTD	ECOF-ECOD
36	2P-70201-06	4	BRNZBRFLN5/8IDX3/4ODX5/8	ECOF-ECOD
37	Q9-50312-41	1	BEARING BRACKET ASSY	ECOF-ECOD
38	Q9-GCCO-185-4	2	HINGE BRACKET RETAINER	ECOF-ECOD
39	2C-20115-01	4	SCRW S/S 8-32X1/2 P/H S/T	ECOF-ECOD
40	2C-20111-07	4	SCRW SCKTHD 5/16-18X5/8	ECOF-ECOD
41	2C-20301-10	2	NUT HEX 6-32 PLTD	ECOF-ECOD
41	2C-20301-10	2	NUT HEX 6-32 PLTD	ECOF-ECOD
41	2C-20301-10	13	NUT HEX 6-32 PLTD	ECOF-ECOD
42	2C-20102-12	4	SCRW PHD ST 10-32X3/8	ECOF-ECOD
43	Q9-ECCO-145-1	1	MICRO SWITCH BRACKET	ECOF-ECOD
44	2E-30301-02	1	SWITCH, MICRO	ECOF-ECOD
45	2C-20101-17	2	SCRW RND MS 6-32X1 PLTD	ECOF-ECOD
46	2C-20104-50	2	SCRW HXHD 1/4-28X2-1/4	ECOF-ECOD
47	Y9-50312-05	1	HANDLE ASSY 1 HANDLE	ECOF-ECOD
48	Q9-60102-1092	1	BOTTOM PANEL ECCO	ECOF-ECOD
49	Q9-ECCO-176-6	1	L/H BODY SIDE	ECOF
49	Q9-ECCO-177-1	1	L/H BODY SIDE DEEP	ECOD
50	2B-50200-93	2	RACK SLIDE 11 POS	ECOF
50	2B-50200-94	2	RACK SLDE 11 POS E&GCCO-T	ECOD
51	2B-50200-20	5	RACK ECCO/GCCO OVEN	ECOF
51	2B-50200-31	5	RACK ECO DEEP OVEN ONLY	ECOD
NI	Q9-ECCOPPT-C	1	PANEL ECCO 208/240V	ECOF-PT, ECOD-PT
NI	Q9-ECCOPPT-U	1	PANEL ECCO 480V PLATIMUN	ECOF-PT-480V

IMPORTANT: WHEN ORDERING, SPECIFY VOLTAGE OR TYPE GAS DESIRED
INCLUDE MODEL AND SERIAL NUMBER

Some items are included for illustrative purposes only and in certain instances may not be available.

Star Manufacturing International, Inc.

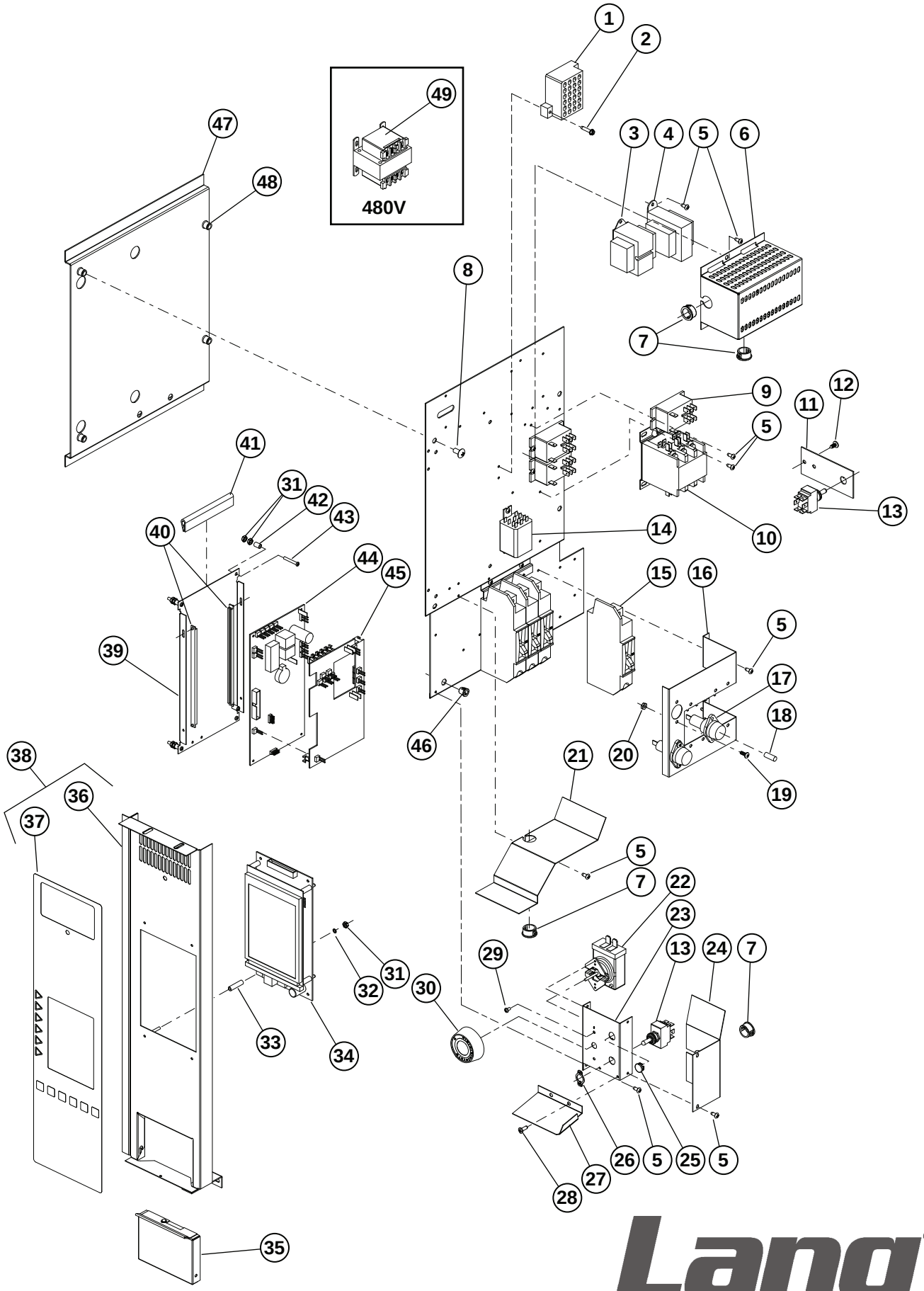

ECOF-PT & ECOD-PT Platinum Controller Panel

SK2361 Rev. - 3/25/2008

PARTS LIST

February 9, 2009

Model No: ECOF-PT & ECOD-PT PLATINUM CONTROL PANEL ASSEMBLY
Full Size Electric Convection Oven

Key Number	Part Number	Qty Per	Description	
	Q9-ECCOPPT-C		PANEL ECCO 208/240V	ECOD-PT, ECOF-PT, ECOF-PT-MF, ECOF-PT-NT, ECOF-PT2/4MF
	Q9-ECCOPPT-U		PANEL ECCO 480V	ECOF-PT-480V, ECOF-PT480MF, ECOF-PT480NT
1	2E-30503-01	1	TRM BLOCK 24 POS QK CON	ECCOPPT-C, ECCOPPT-U
2	2C-20102-05	2	SCRW HXHD ST 8-32X.75	ECCOPPT-C, ECCOPPT-U
3	Y9-31400-26-1	1	XFORMER 208-240/24-12 40V	ECCOPPT-C, ECCOPPT-U
4	2E-31400-07	1	XFORMR120-208-240/24V40VA	ECCOPPT-C
5	2C-20102-08	27	SCRW PHD ST 8-32X.375	ECCOPPT-C
	2C-20102-08	35	SCRW PHD ST 8-32X.375	ECCOPPT-U
6	Q9-ECCO-224-2	1	TRANSFORMER COVER	ECCOPPT-C, ECCOPPT-U
7	2K-70801-04	3	SNAP BUSH 3/4 SB750-10	ECCOPPT-U
	2K-70801-04	6	SNAP BUSH 3/4 SB750-10	ECCOPPT-C
8	2C-20101-11	4	SCRW THD MS 1/4-20X1/2	ECCOPPT-C, ECCOPPT-U
9	2E-30701-05	3	CONTC 2POLE 30A 24VAC P &	ECCOPPT-C, ECCOPPT-U
	2E-30705-03	1	CONTC 2-SPD MTO ABB	ECCOPPT-U
10	2E-30700-06	1	CONTC3POLE35A24VAC50/60HZ	ECCOPPT-C, ECCOPPT-U
11	Q9-ECCO-275-1	1	SWITCH BRACKET	ECCOPPT-C
12	2C-20103-02	2	SCRW SM PLT 10 X .5 PHLSL	ECCOPPT-C
13	2E-30303-06	1	SWT TOG ON-ON DPDT BLK	ECCOPPT-U
	2E-30303-06	2	SWT TOG ON-ON DPDT BLK	ECCOPPT-C
14	2E-30600-02	1	RELAY 240VAC 3FORMC FLNG	ECCOPPT-C, ECCOPPT-U
15	2E-31800-01	4	CB 250V50A 1 POLE CRLNGSW	ECCOPPT-C
	2E-31800-04	1	CB 480V 50A 3 POLE	ECCOPPT-U
16	Q9-ECCO-226	1	FUSE MOUNT C 208-240V	ECCOPPT-C
	Q9-ECCO-226-1	1	FUSE MOUNT C 480V	ECCOPPT-U
17	2E-30901-08	2	FUSE HLDR FOR SC FUSE	ECCOPPT-C, ECCOPPT-U
18	2E-30900-10	2	FUSE 15AMP 300V (SC-15)	ECCOPPT-C, ECCOPPT-U
19	2C-20101-52	4	SCRW RHD MS 8-32 X 1/2	ECCOPPT-C, ECCOPPT-U
20	2C-20301-11	4	NUT HEX 8-32 PLTD	ECCOPPT-C, ECCOPPT-U
21	Q9-ECCO-223-4	1	BARRIER (A & C MODEL	ECCOPPT-C, ECCOPPT-U
22	2T-30402-27	1	STAT ADJ 450 DEG 48 PILOT	ECCOPPT-C, ECCOPPT-U
23	Q9-ECCO-275	1	STAT BRACKET	ECCOPPT-C, ECCOPPT-U
24	Q9-ECCO-276	1	BARRIER	ECCOPPT-C, ECCOPPT-U
25	2P-70903-09	1	PLG BTN PLTD MTL 7/16	ECCOPPT-C
26	2E-30303-10	1	SWT PLATE ON/OFF IND	ECCOPPT-C, ECCOPPT-U
27	Q9-ECCO-277-1	1	DEAD FRONT W/BACKUP STAT	ECCOPPT-C, ECCOPPT-U
28	2C-20102-04	4	SCRW PHD ST 8-32X.5 PLTD	ECCOPPT-C, ECCOPPT-U
29	2C-20101-77	2	SCRW MS PLT 6-32 X .25	ECCOPPT-C, ECCOPPT-U
30	Y9-70701-16	1	KNOB ASSY 450o A	ECCOPPT-C, ECCOPPT-U
31	2C-20301-10	13	NUT HEX 6-32 PLTD	ECCOPPT-C, ECCOPPT-U
32	2C-20205-02	4	.140#6IDX.2500DX.032	ECCOPPT-C, ECCOPPT-U
33	2A-20504-02	4	SPACER NYLON #6 1/4 X 1	ECCOPPT-C, ECCOPPT-U
34	2J-40102-25	1	DSPLY 320X240 DB170-001	ECCOPPT-C, ECCOPPT-U
35	Q9-ECCO-278	1	SWITCH DOOR ASSY - C	ECCOPPT-C, ECCOPPT-U
36	Q9-ECCO-218-32	1	PANEL ASSY - PT	ECCOPPT-C, ECCOPPT-U
37	2M-60301-119	1	SWITCH LBL E/GCCO	ECCOPPT-C, ECCOPPT-U
38	Q9-60101-882	1	CONTROL FRT W/LABEL	ECCOPPT-C, ECCOPPT-U
39	Q9-50307-47	1	CPU MOUNT	ECCOPPT-C, ECCOPPT-U
40	2E-41800-02	2	PCB GUIDE 6675 6.675 LG	ECCOPPT-C, ECCOPPT-U
41	Q9-EH-502-1	1	TRIMLOCK 4	ECCOPPT-C, ECCOPPT-U
42	2A-20501-01	5	SPCR FBR 1/4 OD #8 ID 3/8	ECCOPPT-C, ECCOPPT-U
43	2C-20101-17	4	SCRW RND MS 6-32X1 PLTD	ECCOPPT-C, ECCOPPT-U
44	2J-40102-26	1	MAIN BOARD, MDL.CA170-001	ECCOPPT-C, ECCOPPT-U
45	2J-40102-51	1	CIRBD FILTER	ECCOPPT-C, ECCOPPT-U
46	2K-70801-03	1	SNAP BUSH 3/8 SB375-4 BLK	ECCOPPT-C, ECCOPPT-U

IMPORTANT: WHEN ORDERING, SPECIFY VOLTAGE OR TYPE GAS DESIRED
INCLUDE MODEL AND SERIAL NUMBER

Some items are included for illustrative purposes only and in certain instances may not be available.

PARTS LIST

February 9, 2009

Model No: ECOF-PT & ECOD-PT PLATINUM CONTROL PANEL ASSEMBLY
Full Size Electric Convection Oven

Key Number	Part Number	Qty Per	Description	
47	Q9-ECCO-221	1	SLIDE	ECCOPPT-C, ECCOPPT-U
48	2C-20306-02	4	AVK CAD 1/4-20 1ST GRP	ECCOPPT-C, ECCOPPT-U
49	2E-31400-04	1	XFRMR 480/240VAC 10VA	ECCOPPT-U

IMPORTANT: WHEN ORDERING, SPECIFY VOLTAGE OR TYPE GAS DESIRED
INCLUDE MODEL AND SERIAL NUMBER

Some items are included for illustrative purposes only and in certain instances may not be available.

Suggested Marine Parts Stocking

8 16 28 33 34

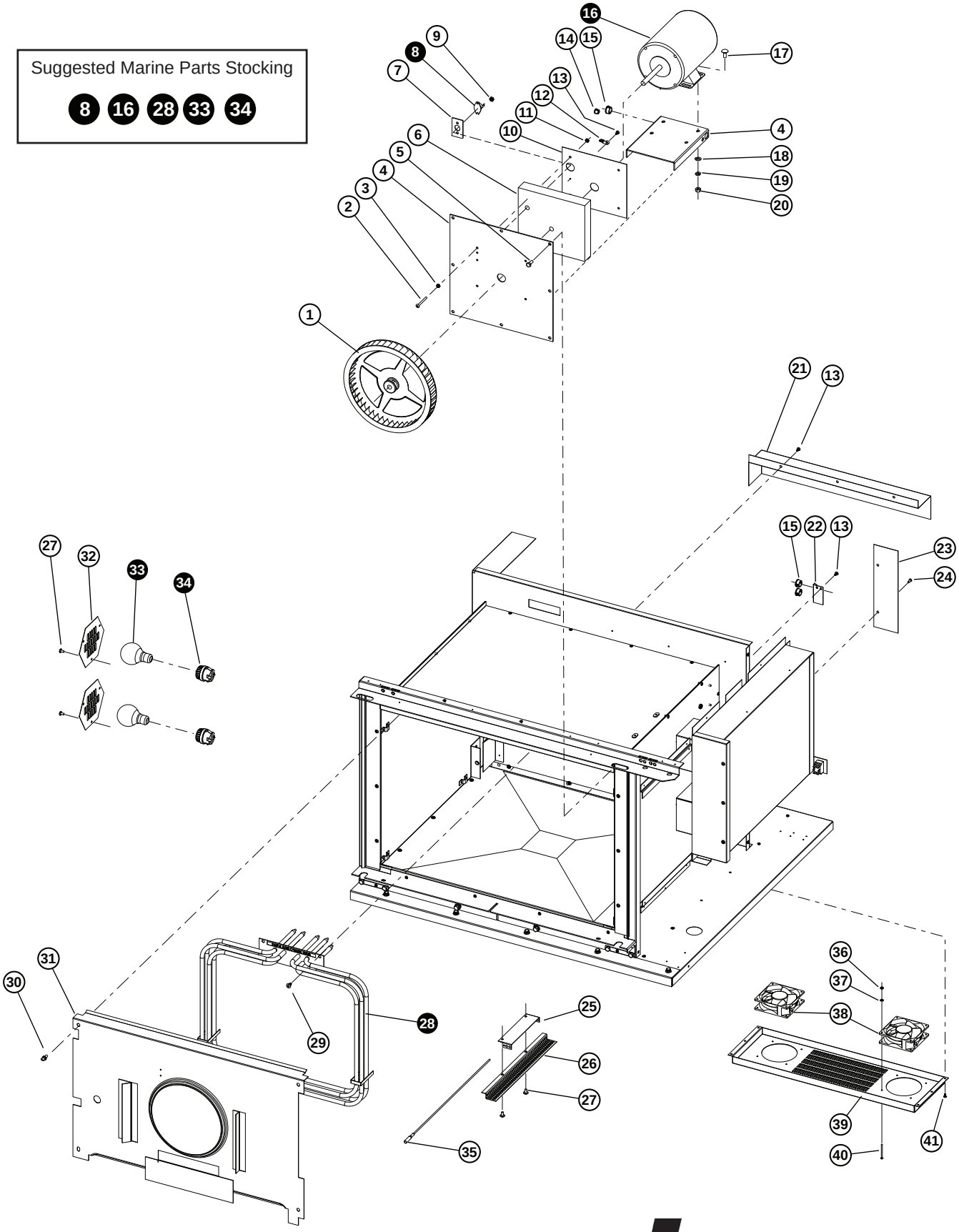

Detail B

ECOF-PT: CAN & MOTOR ASSEMLBY

SK2377 Rev. - 6/06/08

PARTS LIST

October 23, 2009

Model No: ECOF & ECOD CAN & MOTOR ASSEMBLY
Commercial & Marine Full Size Electric Convection Oven

Key Number	Part Number	Qty Per	Description	
1	2U-71500-05	1	BLOWER WHEEL ECCO/GCCO	ECOF, ECOD
2	2C-20101-42	4	SCRW THD MS 10-24X2 PLTD	ECOF, ECOD
3	2C-20301-09	12	NUT HEX 10-24 PLTD	ECOF, ECOD
4	Q9-ECCO-168	1	MOTOR MOUNT WELD	ECOF, ECOD
5	2C-20111-02	8	SCRW HXHD CAP 1/4-20X3/4	ECOF, ECOD
6	2H-ECCO-172	1	MOTOR INSULATION	ECOF, ECOD
7	Q9-GCCO-166-2	1	SPACER - SAFETY STAT	ECOF, ECOD
8	2T-30401-09	1	STAT FXD 500 DEG OPEN	ECOF, ECOD
9	2C-20301-10	2	NUT HEX 6-32 PLTD	ECOF, ECOD
10	Q9-GCCO-167	1	MOTOR SHIELD	ECOF, ECOD
11	2C-20301-09	2	NUT HEX 10-24 PLTD	ECOF, ECOD
12	2C-31900-03	1	CABLE STRAP 3/16X7	ECOF, ECOD
13	2C-20103-09	4	SCRW SM PLT 10 X .5 PHLSL	ECOF, ECOD
14	2K-70801-01	2	SNAP BUSH 7/16 SB437-5	ECOF, ECOD
15	2K-70801-04	10	SNAP BUSH 3/4 SB750-10	ECOF, ECOD
16	2U-30200-16	1	MTR 1/3HP 460V/1/60HZ 2SP	ECOF-PT-480V
	2U-30200-17	1	MTR 1/3HP208/240V1PH2SPD	ECOF, ECOD
	2U-30200-53	1	MTR 1/3HP240/254V50HZ2SP	ECOF-PT2/4MF
17	2C-20118-01	4	SCRW CARRAGE PLT 5/16X.75	ECOF, ECOD
18	2C-20201-09	4	WSHR PLT 5/16 FLAT SAE	ECOF, ECOD
19	2C-20202-08	4	WSHR PLT 5/16 LOCK SPLIT	ECOF, ECOD
20	2C-20301-06	4	NUT HEX 5/16-18 PLTD	ECOF, ECOD
21	Q9-ECCO-122	1	ELEMENT TOP COVER	ECOF, ECOD
22	Q9-GCCO-115-1	1	MOTOR WIRE HOLDER	ECOF, ECOD
23	Q9-ECCO-123	1	ELEMENT SIDE COVER	ECOF, ECOD
24	2C-20102-04	40	SCRW PHD ST 8-32X.5 PLTD	ECOF, ECOD
25	Q9-GCCO-247	1	PROBE HOLDER [ECCO &	ECOF, ECOD
26	Q9-50312-34	1	PROBE COVER ECCO/GCCO	ECOF, ECOD
27	2C-20109-04	4	SCRW THD MS SS 10-32X3/8	ECOF, ECOD
28	2N-11090-16	1	ELE ECCO OVN 208/240V11KW	ECOF-PT, ECOD-PT
	2N-11090-18	1	ELMNT ECCO 480V 11KW	ECOF-PT-480V, ECOF-PT480MF, ECOF-PT480NT
29	2C-20103-02	8	SCRW SM PLT 10 X .5 PHLSL	ECOF, ECOD
30	2C-20112-02	4	SCRWSHLDRTHUM 1/4-20X3/8	ECOF, ECOD
31	Q9-ECCO-163	1	REAR BAFFLE SPOTWELD	ECOF, ECOD
	Q9-ECCO-163-1	1	REAR BAFFLE SPTOWELD-MRS	ECOF-PT-MF, ECOF-PT2/4MF
32	Q9-GCCO-431	2	LIGHT RING - CORRECTIONAL	ECOF, ECOD
33	2S-31603-04	2	LAMPS INC 250V 50W	ECOF, ECOD
34	2E-31602-04	2	LAMP SKT SNAP-IN WHT	ECOF, ECOD
35	2E-41100-08	1	SENSOR OVEN TEMP CONTROL	ECOF, ECOD
36	2C-20301-10	8	NUT HEX 6-32 PLTD	ECOF-PT-480MF, ECOF-PT-480NT
37	2C-20203-04	8	WSHR S/S #10 SAE 7/16OD FLAT	ECOF-PT-480MF, ECOF-PT-480NT
38	2U-30200-46	2	MOTOR W/FAN AXIAL 220VAC	ECOF-PT-480MF, ECOF-PT-480NT
39	Q9-ECCO-185	1	FAN SUPPORT BRACE	ECOF-PT-480MF, ECOF-PT-480NT
40	2C-20109-14	8	SCRW S/S 6-32 X 2 R/H M/S	ECOF-PT-480MF, ECOF-PT-480NT
41	2C-20103-02	6	SCRW SM PLT 10 X .5 PHLSL	ECOF-PT-480MF, ECOF-PT-480NT

IMPORTANT: WHEN ORDERING, SPECIFY VOLTAGE OR TYPE GAS DESIRED
INCLUDE MODEL AND SERIAL NUMBER

Some items are included for illustrative purposes only and in certain instances may not be available.

Star Manufacturing International, Inc.

STAR MANUFACTURING GROUP
Star - Holman - Lang - Wells - Bloomfield - Toastmaster
10 Sunnen Drive, St. Louis, MO 63143 U.S.A.
(800) 807-9054 (314) 781-2777
Parts & Service (800) 807-9054
www.star-mfg.com