SELECTRONIC ELECTRIC GRIDDLE

Commercial & Marine

124S, 124SHE, 124SCHE
136S, 136S-SC, 136SHE
148S, 148SHE, 148SR
160S, 160SHE, 160SR, 160S-SC
172S, 172SR, 172SC

Installation and Operation Instructions

2M-W353 Rev. H 1/17/2012

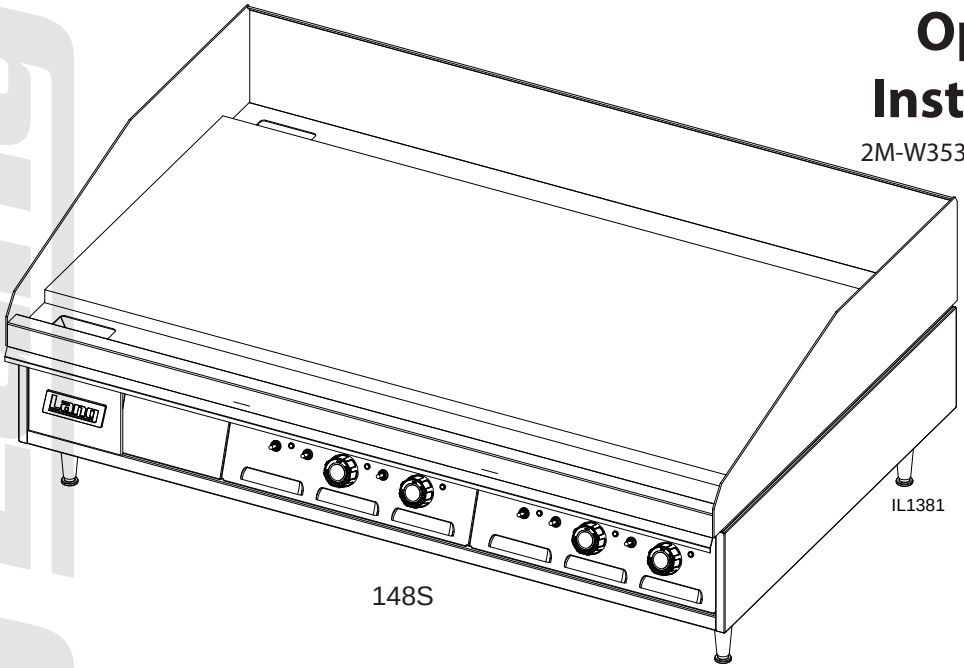

148S

SAFETY SYMBOL

These symbols are intended to alert the user to the presence of important operating and maintenance instructions in the manual accompanying the appliance.

FOR YOUR SAFTEY

DO NOT STORE OR USE GASOLINE OR OTHER FLAMMABLE VAPORS AND LIQUIDS IN THE VICINTIY OF THIS OR ANY OTHER APPLIANCE.

POST IN PROMINENT LOCATION

INSTRUCTIONS TO BE FOLLOWED IN THE EVENT USER SMELLS GAS. THIS INFORMATION SHALL BE OBTAINED BY CONSULTING YOUR LOCAL GAS SUPPLIER. AS A MINIMUM, TURN OFF THE GAS AND CALL YOUR GAS COMPANY AND YOUR AUTHORIZED SERVICE AGENT. EVACUATE ALL PERSONNEL FROM THE AREA.

WARNING

IMPROPER INSTALLATION, ADJUSTMENT, ALTERATION, SERVICE OR MAINTENANCE CAN CAUSE PROPERTY DAMAGE, INJURY OR DEATH. READ THE INSTALLATION, OPERATION & MAINTENANCE INSTRUCTIONS THOROUGHLY BEFORE INSTALLING OR SERVICING THIS EQUIPMENT.

WARNING

RISK OF FIRE OR ELECTRIC SHOCK
DO NOT OPEN

WARNING, **TO REDUCE THE RISK OF ELECTRICAL SHOCK, DO NOT REMOVE CONTROL PANEL. NO USER-SERVICABLE PARTS INSIDE.**
REPAIRS SHOULD BE DONE BY AUTHORIZED SERVICE PERSONNEL ONLY.

NOTICE

Using any part other than genuine Lang factory supplied parts relieves the manufacturer of all liability.

Lang reserves the right to change specifications and product design without notice. Such revisions do not entitle the buyer to corresponding changes, improvements, additions or replacements for previously purchased equipment.

Due to periodic changes in designs, methods, procedures, policies and regulations, the specifications contained in this sheet are subject to change without notice. While Lang exercises good faith efforts to provide information that is accurate, we are not responsible for errors or omissions in information provided or conclusions reached as a result of using the specifications. By using the information provided, the user assumes all risks in connection with such use.

MAINTENANCE AND REPAIRS

Contact your local dealer for service or required maintenance. Please record the model number, serial number, voltage and purchase & Installation Information in the area below and have it ready when you call to ensure a faster service.

Model No.: _____ Purchased From: _____

Serial No.: _____ Location: _____

Voltage: _____ Purchase Date: _____

1-Phase or 3 Phase: _____ Installed Date: _____

PROBLEMS, QUESTIONS or CONCERNS

Before you proceed consult you authorized Lang service agent directory
or
Call the Lang Technical Service & Parts Department at 314-678-6315.

TABLE OF CONTENTS

Specifications . . . . . 4 - 5

Equipment Description 6

Unpacking 7

Installation
- Leg Installation 8
- Ventilation & Clearence 9
- Electrical Connection 9
- Technical Data. 9
- Phasing 9

Initial Start-Up
- Pre-Power On 10
- Power On 10
- Seasoning Cooking Surface. 10

Operation
- General 11
- Operations. 11
- Suggested Times and Temperatures 11

Maintenance
- Cleaning 12

Troubleshooting
- Symptoms / Possible Causes 13
- Possible Causes / Test 14

Wiring Diagram
- 208/240VAC 15
- 480VAC 16
- 380VM. 17
- 5’ 480V, w/CSE12 Hoods 18

Exploded View & Parts List 19-27

NOTICE Service on this or any other Lang appliance must be performed by qualified personnel only. Consult your Lang Authorized Service Agent Directory. You can call our tech service number 314-678-6315 or visit our website www.langworld.com for the service agent nearest you.

EQUIPMENT SPECIFICATIONS

Model	Height x Width x Depth (Not including legs)	Clearance from combustible surface	Weight		Freight Class
			Actual	Shipping	
124	15.0" x 24.0" x 28.2" 381mm x 610mm x 717mm	Sides: 2" Back: 2"	243 lbs. 110 kg	280 lbs. 127 kg	85
136	15.0" x 36.0" x 28.2" 381mm x 914mm x 717mm		368 lbs. 167 kg	410 lbs. 186 kg	
148	15.0" x 48.0" x 28.2" 381mm x 1219mm x 717mm		483 lbs. 220 kg	515 lbs. 234 kg	
160	15.0" x 60.0" x 28.2" 381mm x 1524mm x 717mm		621 lbs. 282 kg	665 lbs. 302 kg	
172	15.0" x 72.0" x 28.2" 381mm x 1830mm x 717mm		724 lbs. 329 kg	800 lbs. 364 kg	

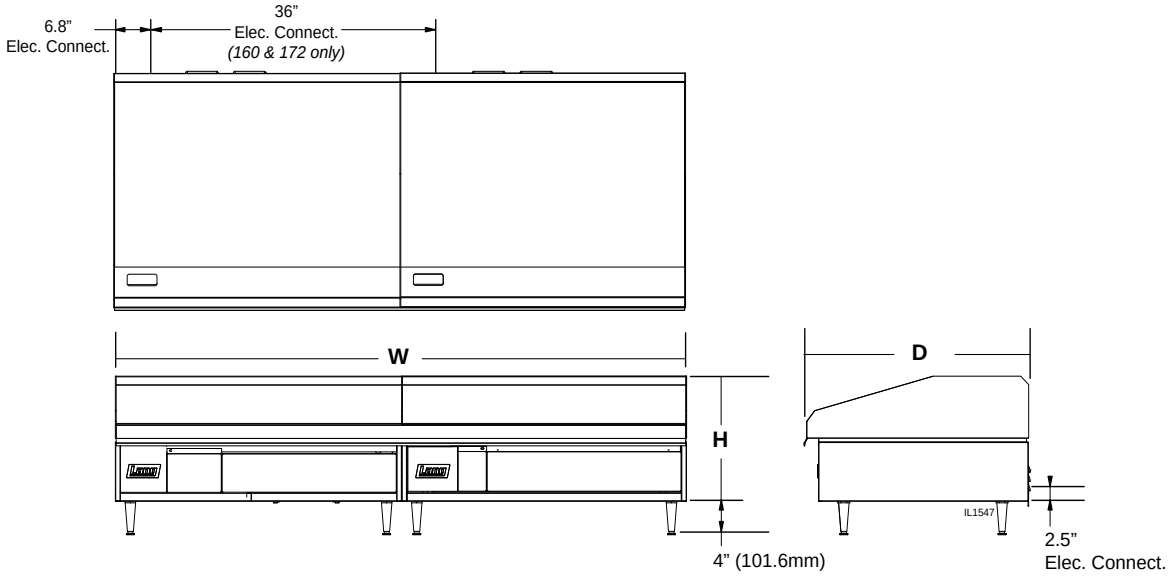

EQUIPMENT SPECIFICATIONS

Current Model	Volts AC	Hz.	PHASE	Kw TOT.	Amp 1PH.	Supply Wire 1 PH	Amp 3 Ph			Supply Wire 3 PH	Kw TOT.	Amp 1PH.	Supply Wire 1 PH	Amp 3 Ph			Supply Wire 3 PH
							L1	L2	L3					L1	L2	L3	
124S	208/240	60	1/3	12	58	4	50	29	29	6							
124S-480V	480	60	3	12			22	13	13	12							
124SHE	208/240	60	1/3	12	58	4	50	29	29	6							
124SCHE	208/240	60	1/3	12	58	4	50	29	29	6							
136S	208/240	60	1/3	18	87	2	50	50	50	6							
136S-380V	380	50/60	3	18			27.3	27.3	27.3	10							
136S-480V	480	60	3	18			22	22	22	12							
136SB-WB	208/240	60	1/3	18	87	2	50	50	50	6							
136SHE	208/240	60	1/3	18	87	2	50	50	50	6							
136S-SC	208/240	60	1/3	18	87	2	50	50	50	6							
136S-SC	208/240	60	1/3	18	87	2	50	50	50	6							
148S	208/240	60	1/3	24	116	1	75	75	50	3							
148S-480V	480	60	3	24			33	33	22	8							
148SHE-480V	480	60	3	24			33	33	22	8							
148S-SC	208/240	60	1/3	24	116	1	75	75	50	3							
160S	208/240	60	1/3	1	58	2	50	29	29	6	18	87	2	50	50	50	6
160S-480V	480	60	3	12			22	13	13	12	18			22	22	22	12
160SC	208/240	60	1/3	12	58	4	50	29	29	6	18	87	2	50	50	50	6
160SHE	208/240	60	1/3	12	58	2	50	29	29	6	18	87	2	50	50	50	6
160SHE-480V	480	60	3	12			22	13	13	12	18			22	22	22	12
160SR	208/240	60	1/3	12	58	2	50	29	29	6	18	87	2	50	50	50	6
160S-SC	208/240	60	1/3	12	58	2	50	29	29	6	18	87	2	50	50	50	6
160S-WB	208/240	60	1/3	12	58	2	50	29	29	6	18	87	2	50	50	50	6
172S	208/240	60	1/3	18	87	2	50	50	50	6	18	87	2	50	50	50	6
172S-480V	480	60	3	18			22	22	22	12	18			22	22	22	12
172SR	208/240	60	1/3	18	87	2	50	50	50	6	18	87	2	50	50	50	6
172S-SC	208/240	60	1/3	18	87	2	50	50	50	6	18	87	2	50	50	50	6

SPECIFICATIONS MARINE

Current Model	Volts AC	Hz.	Ph.	Kw TOT.	Amp 1PH	Supply Wire 1 PH	Amp 3 Ph			Supply Wire 3 PH	Kw TOT.	Amp 1PH	Supply Wire 1 PH	Amp 3 Ph			Supply Wire 3 PH
							L1	L2	L3					L1	L2	L3	
124S-440VM	440V	50/60	3	10.1			20	12	12	12							
124S-480VM	480V	60	3	12			22	13	13	12							
136SC-208VM	208/240V	60	1/3	18	87	2	50	50	50	6							
136S-380VM	380V	60	3	18			27.3	27.3	27.3	10							
136S-440VM	440V	60	3	18			23.6	23.6	23.6	12							
136S-480VM	480V	60	3	18			22	22	22	12							
148S-480VM	480V	60	3	24			33	33	22	8							
160S-M	208/240V	60	1/3	12	58	2	50	29	29	6	18	87	2	50	50	50	6
172S-440VM	440V	60	3	18			23.6	23.6	23.6	12	18			23.6	23.6	23.6	12
172SM	208/240V	60	1/3	18	87	2	50	50	50	6	18	87	2	50	50	50	6
172S-480VM	480V	60	3	18			22	22	22	12	18			22	22	22	12

MARINE EQUIPMENT IS APPROVED FOR INSTALLATION ONLY ON VESSELS GREATER THAN 65 FEET IN LENGTH, IN ACCORDANCE WITH USCG REGULATIONS IN TITLE 46 CFR 110-113.

ANY WIRING USED IN THE INSTALLATION OF THIS APPLIANCE MUST BE STRANDED COPPER.

EQUIPMENT DESCRIPTION

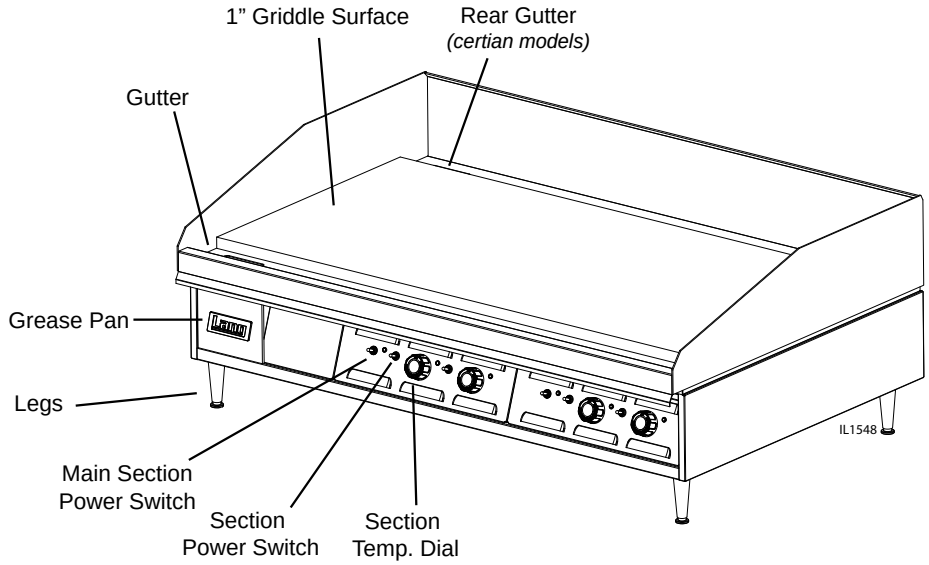

Exterior Construction

The griddle dimensions are 17” (43.18cm) High, 30” (76.20cm) Deep, and width is dependent on the actual model number.

The Sides, Bottom, and Rear wall are constructed of double wall stainless steel, which allows closer installation to combustible surfaces.

The griddle surface is made of 1” thick, highly polished steel to reduce hot and cold spots, recovery problems, warping, and ensure even heat to the edges of the griddle.

Controls

Each twelve-inch section has its own temperature selector switch that snaps into place to lock in any temperature from 175°F to 450°F (79°C to 232°C) in 25° increments.

Each twelve-inch section of the griddle is controlled by an area sensitive RTD probe, which can sense and react to a temperature change of +/- 4°F.

Each twelve-inch section has a set of 6 K.W. elements for high efficiency, quick recovery and outstanding performance

Technical

The 100 Series Selectronic griddle operates on either 208/240V or 480V, at either single or three phase.

This must be specified when ordering.

Minimum clearances: 2” from side and back

NOTICE **The data plate is on the right side of the griddle. The oven voltage, wattage, serial number, wire size, and clearance specifications are on the data plate. This information should be carefully read and understood before proceeding with the installation.**

UNPACKING

Receiving the Griddle

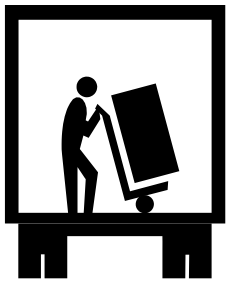

Upon receipt, check for freight damage, both visible and concealed. Visible damage should be noted on the freight bill at the time of delivery and signed by the carrier's agent. Concealed loss or damage means it does not become apparent until the merchandise has been unpacked. If concealed loss or damage is discovered upon unpacking, make a written request for inspection by the carrier's agent within 15 days of delivery. All packing material should be kept for inspection. **Do not return damaged merchandise to Star Manufacturing Company. File your claim with the carrier.**

Location

Prior to un-crating, move the oven as near to its intended location as practical. The crating will help protect the unit from the physical damage normally associated with moving it through hallways and doorways.

Un-crating

The griddle will arrive completely assembled inside a wood frame and strapped to a skid. Cut the straps and remove the wood frame.

The oven can now be removed from the skid.

CAUTION

THE UNIT IS EXTREMELY HEAVY. FOR SAFE HANDLING, INSTALLER SHOULD OBTAIN HELP AS NEEDED, OR EMPLOY APPROPRIATE MATERIALS HANDLING EQUIPMENT (SUCH AS A FORKLIFT, DOLLY, OR PALLET JACK) TO REMOVE THE UNIT FROM THE SKID AND MOVE IT TO THE PLACE OF INSTALLATION.

ANY STAND, COUNTER OR OTHER DEVICE ON WHICH OVEN WILL BE LOCATED MUST BE DESIGNED TO SUPPORT THE WEIGHT OF THE GRIDDLE.

SHIPPING STRAPS ARE UNDER TENSION AND CAN SNAP BACK WHEN CUT.

INSTALLATION

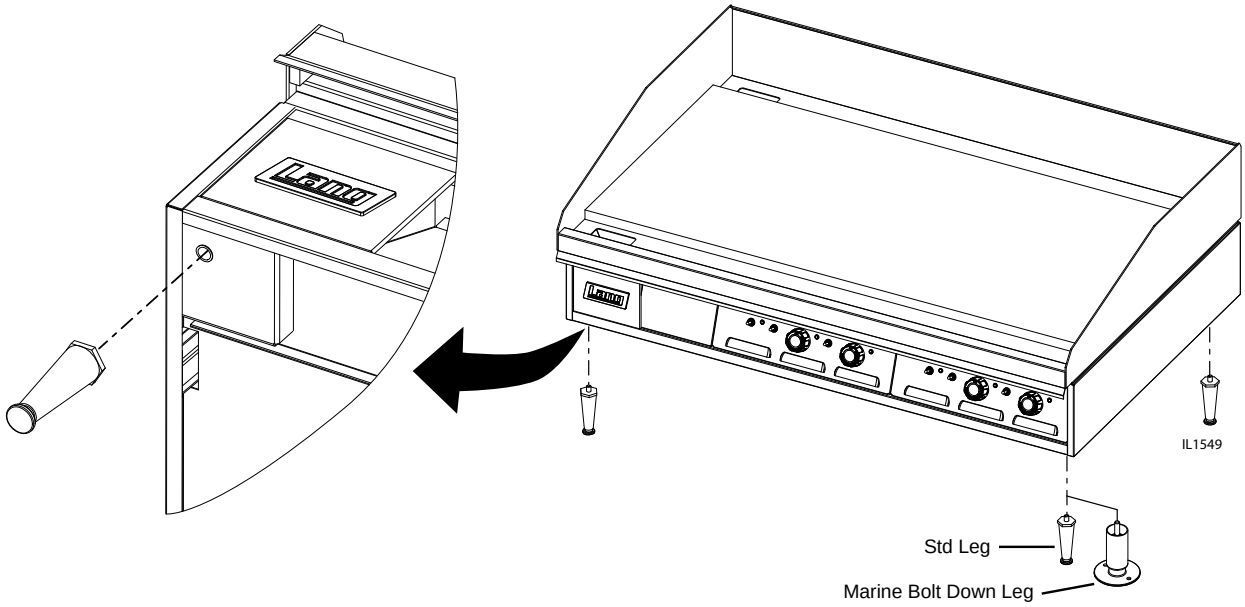

Above: *typical leg installation.*

Leg Installation

There are four, 4” legs provided for 2, 3 and 4 foot griddles.

There are eight 4” legs provided for 5 and 6 foot griddles.

The legs are shipped in the grease drawers of the griddle. Install them into the threaded holes on the underside of the griddle body.

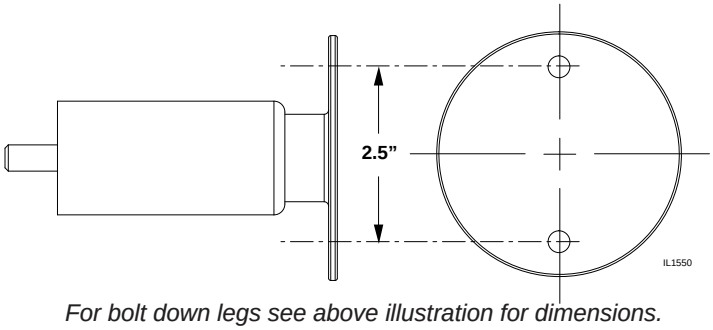

For bolt down legs see above illustration for dimensions.

Leveling adjustment may be done by screwing the bottom portion of the leg in and out.

DANGER: **THIS APPLIANCE MUST BE GROUNDED AT THE TERMINAL PROVIDED. FAILURE TO GROUND THE APPLIANCE COULD RESULT IN ELECTROCUTION AND DEATH.**

WARNING **INSTALLATION OF THE UNIT MUST BE DONE BY PERSONNEL QUALIFIED TO WORK WITH ELECTRICITY AND PLUMBING. IMPROPER INSTALLATION CAN CAUSE INJURY TO PERSONNEL AND/OR DAMAGE TO EQUIPMENT. UNIT MUST BE INSTALLED IN ACCORDANCE WITH ALL APPLICABLE CODES.**

NOTICE: **The data plate is located behind access panel between controls and grease drawer. The grill voltage, wattage, serial number, wire size, and clearance specifications are on the data plate. This information should be carefully read and understood before proceeding with the installation.**

NOTICE: **The installation of any components such as a vent hood, grease extractors, fire extinguisher systems, must conform to their applicable National, State and locally recognized installation standards.**

CAUTION **ALWAYS KEEP THE AREA NEAR THE APPLIANCE FREE FROM COMBUSTIBLE MATERIALS.**

KEEP FLOOR IN FRONT OF EQUIPMENT CLEAN AND DRY. IF SPILLS OCCUR, CLEAN IMMEDIATELY, TO AVOID THE DANGER OF SLIPS OR FALLS.

Ventilation and Clearances

Standard minimum clearance from combustible construction is as follows.

2” from side
2” from back

These griddles may be set directly, without legs, on a curbed base or **non-combustible** surface.

If the griddle is set without legs on a **non-combustible** floor or a curbed base, maintain a 4-inch back clearance.

Do not install the griddle directly against a **non-combustible** back wall or surface.

Do not install the griddle closer than 12 inches from an uncontrolled heat source (char broiler etc.).

Keep the appliance area free and clear of combustible material and do not obstruct the flow of combustion or ventilation air.

Electrical Connection

There is one power supply connection on the 2, 3, and 4-foot griddles. There are two power supply connections on 5 and 6-foot griddles. Refer to the power supply chart in the Technical Data portion of this manual, for proper power supply size.

There is (1) one 1 1/4-inch conduit knockout on 2, 3 and 4-foot griddles located at the rear of the griddle, through the back and the bottom of the griddle body. There are (2) two 1 1/4-inch conduit knockouts provided on the 5 and 6-foot griddles. Use a supply wire suitable for at least 90 degree centigrade.

This Selectronic griddle is shipped from the factory, wired for 208/240 or 480 volts, the 208/240 griddle is a dual voltage design. Jumper wires on terminal strip next to the main power supply connection determine the griddle voltage. For a 208-volt power supply, leave the jumpers in place. For a 240-volt power supply disconnect the jumpers as indicated on the tag on the terminal strip. The 480-volt griddle can be operated on 480 volts only and must be specified when ordering.

Technical Data

MODEL NUMBER		TOTAL K.W.	NOMINAL AMPS PER LINE										
			THREE PHASE									SINGLE PHASE	
			208 Volt			240 Volt			480 Volt				
			L1	L2	L3	L1	L2	L3	L1	L2	L3	208V	240V
24”		12	50	28.8	28.8	43.3	25	25	21.7	12.5	12.5	57.7	50
36”		18	50	50	50	43.3	43.3	43.3	21.7	21.7	21.7	86.5	75
48”		24	75	75	50	65	65	43.3	32.5	32.5	21.7	115.5	100
60”	#1	18	50	50	50	43.3	43.3	43.3	21.7	21.7	21.7	86.5	75
	#2	12	50	28.8	28.8	43.3	25	25	21.7	12.5	12.5	57.7	50
72”	#1	18	50	50	50	43.3	43.3	43.3	21.7	21.7	21.7	86.5	75
	#2	18	50	50	50	43.3	43.3	43.3	21.7	21.7	21.7	86.5	75

Phasing

All griddles are shipped from the factory set up for a three-phase service. Rearrange the wires in the power supply terminal block to convert the griddle to single phase. Re-phasing the griddle is not chargeable to Lang Manufacturing Company as warranty. To convert to single-phase have a Lang Authorized Service Agent, follow this chart.

PHASING BY WIRE NUMBER					
MODEL NUMBER	THREE PHASE			SINGLE PHASE	
	LINE 1	LINE 2	LINE 3	LINE 1	LINE 2
124S	1,4	2	3	1,3	2,6
136S	1,4	2,5	3,6	1,3,5	2,4,6
148S	1,4,7	2,5,8	3,6,9	1,3,5,7	2,4,6,8
160S #1	1,4	2,5	3,6	1,3,5	2,4,6
160S #2	1,4	2	3	1,3	2,6
172S #1	1,4	2,5	3,6	1,3,5	2,4,6
172S #2	1,4	2,5	3,6	1,3,5	2,4,6

INITIAL START UP

Pre-Power On

Before starting the griddle for the first time, clean the griddle body and cooking surface.

Use a mild soap and water solution, then rinse with clear water and dry.

Power On

Set the main power switch, located at the far left of the control panel, to the “ON” (up) position (there are two “ON” switches on 5 and 6 foot griddles).

Set each cooking section’s power switch, located next to each temperature dial, to the “ON” (up) position.

Set the temperature dials to 200°F.

Heat the griddle at 200°F (93°C) for 2 hours to evaporate any moisture that may be in the elements.

After 2 hours at 200°F (93°C), turn the temperature up to 350°F (176°C) for ½ hour.

After the griddle reaches 350°F (176°C) for ½ hour, turn the griddle up another 50°F (10°C) for another ½ hour and repeat this until it is at 450°F (232°C) for ½ hour.

The unit may emit a small amount of smoke as the cooking surface passes the 300°F (148°C) point. Do not be alarmed as the smoke is caused by oils associated with the manufacturing process and will stop when the griddle reaches 350°F (176°C).

Seasoning Cooking Surface (Non-Chrome Only)

The cooking surface must be “seasoned” in order to eliminate product sticking during cooking.

To season, heat the griddle to 250°F (121°C).

Once at 250°F (121°C), coat the cooking surface with non-salted vegetable oil.

Allow the griddle to stand at 250°F (121°C) until the cooking surface looks dry then coat it again.

Heat the griddle to 350°F (176°C) and repeat the procedure.

NOTICE: During the first few hours of operation you may notice a small amount of smoke coming off the griddle, and a faint odor from the smoke. This is normal for a new griddle and will disappear after the first few hours of use.

OPERATION

General

The suggested time and temperature chart (below) is provided as a guide for the products listed only.

If different temperature settings are to be used, select one side of the griddle and operate at the lowest temperature. Adjoining sections should be set at progressively higher temperatures. Do not try to operate the end sections hot and the center sections cool.

CAUTION

ALWAYS KEEP THE AREA NEAR THE APPLIANCE FREE FROM COMBUSTIBLE MATERIALS.

KEEP FLOOR IN FRONT OF EQUIPMENT CLEAN AND DRY. IF SPILLS OCCUR, CLEAN IMMEDIATELY, TO AVOID THE DANGER OF SLIPS OR FALLS.

Operations

An understanding of how the griddle sections are controlled will be a valuable aid in loading product on your unit.

Each 12-inch section of your griddle is independently controlled by a temperature controller. The temperature control sensor is mounted in the center of each cooking section under the griddle plate.

If the product is loaded directly over the temperature sensor, that section will turn on and the burner will heat the entire cooking section. If the product is loaded to the side, front or back of the temperature sensor, the thermostat will react to the temperature change much slower.

During slow periods with minimal loads, do not load directly over the thermostat sensors as this will unnecessarily turn the burners on and overheat the remainder of the section not being utilized.

SUGGESTED TIMES AND TEMPERATURES

PRODUCTS	TEMPERATURE F / C	TIME (MIN)
HAMBURGER		
2 patties per LB	350°F / 176°C	6 to 8
4 patties per LB		4 to 6
6 patties per LB		3 to 4
STEAKS		
1/2 to 3/4 inch thick, cooked medium	375°F / 190°C	5 to 7
3/4 to 1 inch thick, cooked medium		8 to 10
Lamb Chops	350°F / 176°C	6 to 8
Pork Chops		6 to 8
Salmon	350°F / 176°C	6 to 8
Halibut	325°F / 162°C	6 to 8
Snapper		6 to 8
Hash Brown Potatoes	375°F / 190°C	3 to 4
Bacon	350°F / 176°C	3 to 4
Sausage Links or Patties		3 to 4
Ham (Pre-cooked)	375°F / 190°C	2
Eggs	275°F / 135°C	2 to 4

Note: The times and temperatures in this chart are intended as a general guide and starting point. Your actual times and temperatures may vary from this chart.

Turn the product and continue cooking until it has reached its desired degree of doneness.

Remove the product from the griddle.

When reloading the griddle, first use the griddle surface on which a previous load was not placed. This will help insure the proper griddle temperature.

MAINTENANCE & CLEANING

Cleaning

- Always start with a cold griddle.
- The stainless exterior can easily be cleaned using a good non-abrasive cleaner.
- Always follow the cleaner manufacturer's instructions when using any cleaner.
- Always apply these cleaners when the griddle is cold and rub in the direction of the metal's grain.

Griddle Surface Care (non-chromium surfaces)

It takes very little time and effort to keep the griddle attractive and performing at top efficiency. If grease is permitted to accumulate, it will form a gummy cake and then carbonize into a hard substance which is extremely difficult to remove. To prevent this condition, the following suggestions for cleanliness should be followed:

- After each use, scrape the griddle with a scraper or flexible spatula to remove excess grease and food. A waste drawer is provided for the scrapings. If there is an accumulation of burned on grease and food, the griddle should be thoroughly scoured and re-seasoned. Use pumice or griddle stone while the griddle is warm.

Do not use steel wool because of the danger of steel slivers getting into the food.

Griddle Care (Chromium Surfaces)

It takes very little time and effort to keep this Industrial Chromium griddle surface sparkling clean and performing at top efficiency. DO NOT allow grease to accumulate as it will carbonize and become difficult to remove. To prevent this condition the following cleaning suggestions should be followed:

1. Remove excess grease and food regularly with a 4" (100mm) wide Razor Sharp type scraper and wipe surface with a damp cloth if desired.
2. Following the scraping, for end of the day cleaning, a damp cloth and a non-silicated, nonabrasive, non-chlorinated cleaner such as Bon-Ami may be used to wipe surface clean, followed by wiping with a clean wet cloth.
3. Follow steps 2 and 3 from Griddle Care (Non-Chromium Surfaces) above.

CAUTION

1. **Never** use pumice, griddle stones, or abrasives on a chromium surface.
2. **Never** strike a chromium griddle surface with a sharp instrument or spatula edge.
3. **Never** use steel wool.
4. **Never** use commercial liquid grill cleaner on the griddle surface.
5. **Abusing** surface voids the warranty.

WARNING

KEEP WATER AND SOLUTIONS OUT OF CONTROLS. NEVER SPRAY OR HOSE CONTROL CONSOLE.

CAUTION

MOST CLEANERS ARE HARMFUL TO THE SKIN, EYES, MUCOUS MEMBRANES AND CLOTHING. PRECAUTIONS SHOULD BE TAKEN TO WEAR RUBBER GLOVES, GOGGLES OR FACE SHIELD AND PROTECTIVE CLOTHING. CAREFULLY READ THE WARNING AND FOLLOW THE DIRECTIONS ON THE LABEL OF THE CLEANER TO BE USED.

NOTICE: **Never leave a chlorine sanitizer in contact with stainless steel surfaces longer than 10 minutes. Longer contact can cause corrosion.**

TROUBLESHOOTING

Symptoms

What follows is a chart of symptoms and possible causes to aid in diagnosing faults with the griddle.

Refer to the Symptoms column to locate the type of failure then to the possible cause for the items to be checked.

To test for a possible causes refer to the TEST section and locate the possible cause then refer to test to identify test procedures.

SYMPTOM	POSSIBLE CAUSE
Whole Griddle will not heat	• No Power to Griddle • Failed Power switch • Failed Transformer.
One Section will not heat	• Failed Power switch (for that section) • Failed Probe • Failed Circuit board • Failed 12-position switch • Failed contactor • Failed Element.
Product Burning	• Product left on griddle too long • Failed Probe • Failed Circuit board • Failed 12-position switch
Product Under cooked	• Product removed too soon • Failed Probe • Failed Circuit board • Failed 12-position switch

NOTICE: **Service on this, or any other, LANG appliance must be performed by qualified personnel only. Consult your Lang Authorized Service Agent Directory or call the factory at 314-678-6315, or WWW.LANGWORLD.COM For the service agent nearest you.**

WARNING **BOTH HIGH AND LOW VOLTAGES ARE PRESENT INSIDE THIS APPLIANCE WHEN THE UNIT IS PLUGGED/WIRED INTO A LIVE RECEPTACLE. BEFORE REPLACING ANY PARTS, DISCONNECT THE UNIT FROM THE ELECTRIC POWER SUPPLY.**

If an item on the list is followed by an asterisk (*), the work should be done by a factory authorized service representative.

POSSIBLE CAUSE	TEST
Product is cooked too long	• No test available, operational condition
Failed Probe	• Check probe for proper resistance*
Failed Circuit board	• Confirm that Circuit board is getting correct voltage and putting out correct voltage*
Failed Transformer	• Check both Primary and Secondary coils for correct voltage*
Failed Contactor	• Remove the wires from the contactor coil and check for continuity across the contactor coil connection* • Ensure the contactor moveable points move freely up and down*
Failed Element	• Confirm that Elements are getting correct voltage and have continuity*

CAUTION **USE OF ANY REPLACEMENT PARTS OTHER THAN THOSE SUPPLIED BY LANG OR THEIR AUTHORIZED DISTRIBUTORS CAN CAUSE BODILY INJURY TO THE OPERATOR AND DAMAGE TO THE EQUIPMENT AND WILL VOID ALL WARRANTIES.**

ELEMENT HOOKUP	
208V	240V
INSTALL JUMPER (4)	REMOVE JUMPER (4)

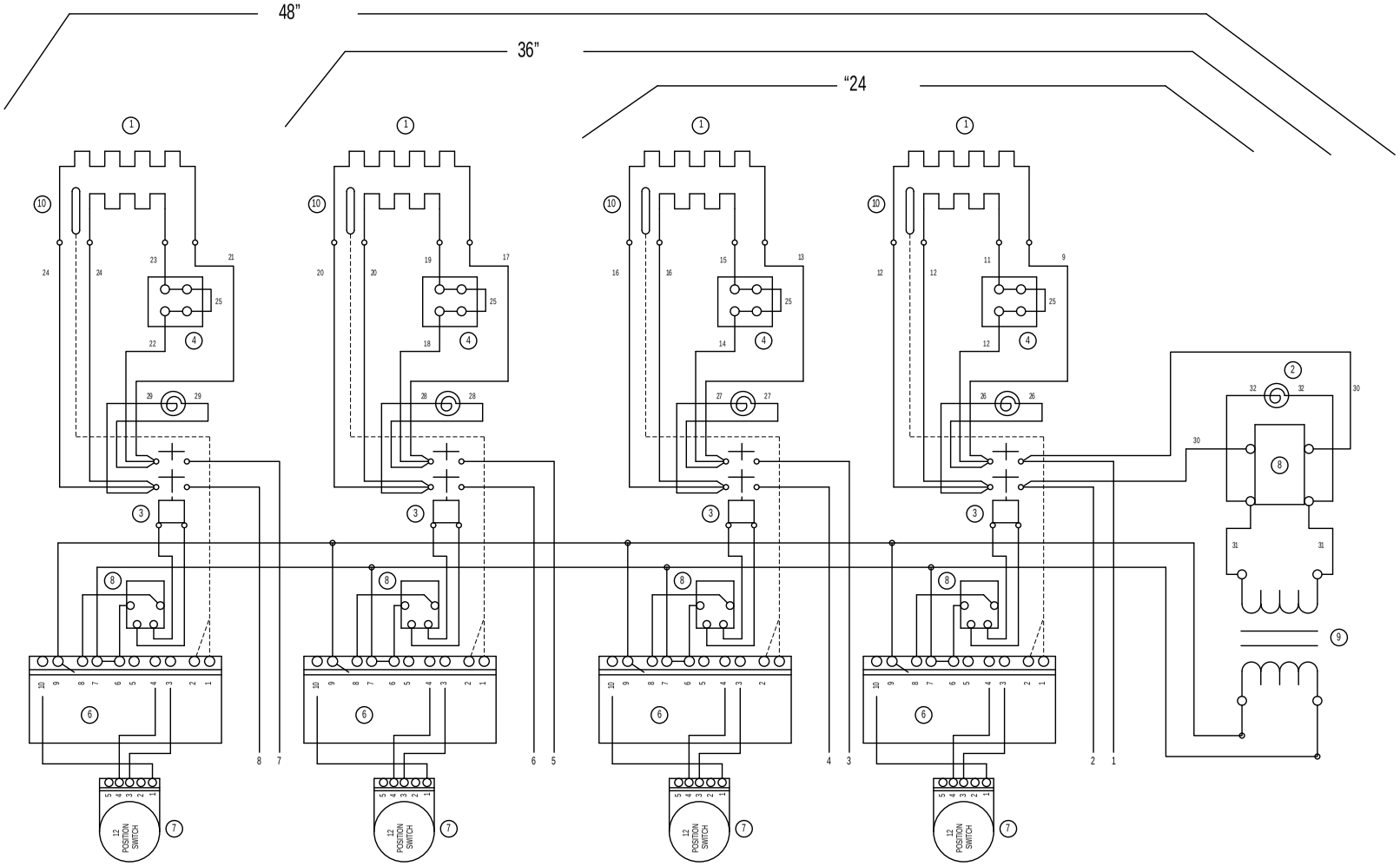

1. GRIDDLE ELEMENTS
2. GRIDDLE PILOT LAMP
3. CONTACTOR
4. JUMPER
5. TERMINAL BLOCK
6. TEMP. CONTROL BOARD
7. 12 POSITION SWITCH
8. TOGGLE SWITCH
9. TRANSFORMER
10. PROBE

NOTE: 60" & 72" HAVE TWO POWER SUPPLY CONNECTIONS

60": CONN # 1 USE LG36
CONN # 2 USE LG24

72": CONN # 1 USE LG36
CONN # 2 USE LG36

MODEL	K.W.			
	L1-L2	L2-L3	L3-L1	TOTAL
24	6.0	0.0	6.0	12.0
36	6.0	6.0	6.0	18.0
48	12.0	6.0	6.0	24.0

SERVICE CONNECTIONS

THREE PHASE			SINGLE PHASE	
L1	L2	L3	L1	L2
1,4	2	3	1,3	2,4
1,4	2,5	3,6	1,3,5	2,4,6
1,4,7	2,5,8	3,6	1,3,5,7	2,4,6,8

Lang
A Division of Star Mfg. Int'l, Inc.

DWN. BY: DLG / DWN. DATE: 12-10-03
DESCRIPTION: W/D GRIDDLE 208/240VAC
CAD FILE: FROM ACAD / DWG. NO: 61114-14 / SHEET 1 OF 1 / REV: B

Note:

1. Add one more section for a single connection “48
2. Add two more sections for a 60”
3. This wiring diagram shows 1/2 section for a 72” model
4. Do not use more than 4 contactors to one transformer

1 GRIDDLE ELEMENTS
2 GRIDDLE PILOT LAMP
3 CONTACTOR
4 JUMPER
5 TERMINAL BLOCK
6 TEMP. CONTROL BOARD
7 12 POSITION SWITCH
8 TOGGLE SWITCH
9 TRANSFORMER
10 PROBE

NOTE: SOME 48” AND ALL 60” & 72” GRIDDLES HAVE TWO POWER SUPPLY CONNECTIONS

48”: CONN # 1 USE LG24
CONN # 2 USE LG24

60”: CONN # 1 USE LG36
CONN # 2 USE LG24

72”: CONN # 1 USE LG36
CONN # 1 USE LG36

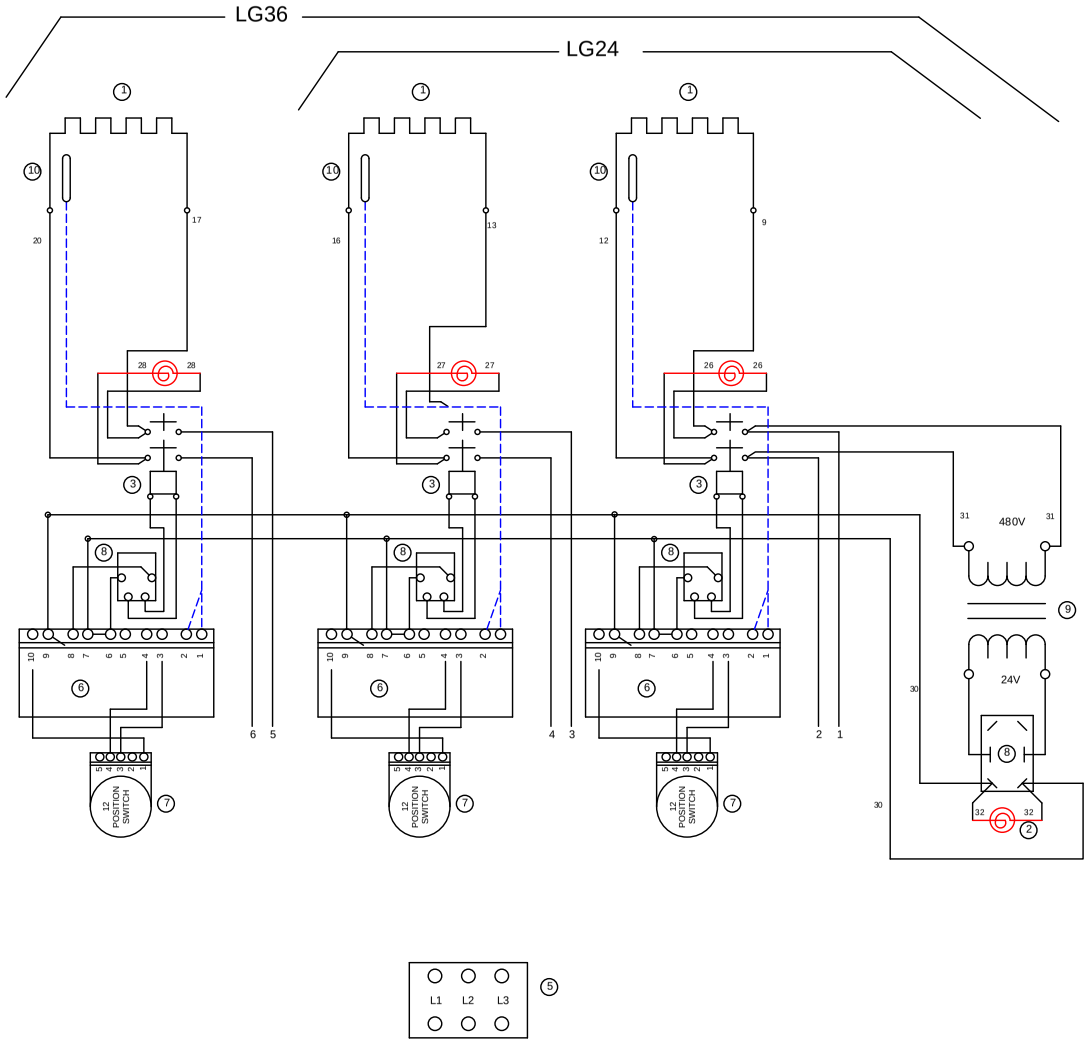

Lang A Division of Star Mfg. Int'l, Inc.	DWN. BY : SRC	DWN. DATE : 10-28-96	
	DESCRIPTION: LANG-GRIDDLE 480VAC SELECTRONIC		
	CAD FILE : FROM ACAD	DWG. NO: 61114-17	SHEET 1 OF 1 / REV: C

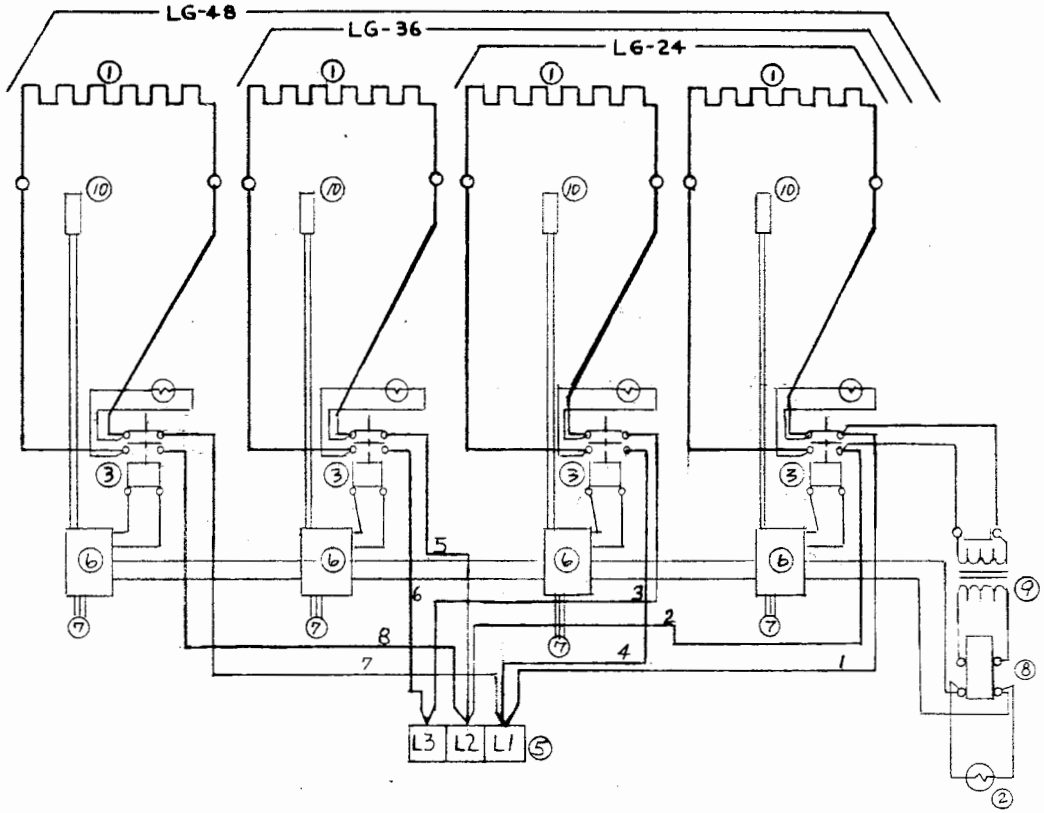

① GRIDDLE ELEMENTS
② GRIDDLE PILOT LAMP
③ GRIDDLE CONTACTOR
⑤ TERMINAL BLOCK
⑥ TEMPERATURE CONTROL BOARD
⑦ 12 POSITION SWITCH
⑧ TOGGLE SWITCH
⑨ TRANSFORMER
⑩ PROBE

MODEL	KW					SERVICE CONNECTION THREE PHASE		
	L1-L2	L2-L3	L3-L1	TOTAL		L1	L2	L3
LG-24	6.0	0.0	6.0	12.0		1,4	2	3
LG-36	6.0	6.0	6.0	18.0		1,4	2,5	3,6
LG-48	12.0	6.0	6.0	24.0		1,4,7	2,5,8	3,6

	AMPS PER LINE		
	L1	L2	L3
LG-24	27.3	13.7	13.7
LG-36	27.3	27.3	27.3
LG-48	41	41	27.3

380 V SELECTRONIC

A 9-28-88	QTY.	MATERIAL	
	LANG MFG. CO. REDMOND, WA.	LANG GRIDDLE	
		380 V AC	
	DR JAS 9-15-88		
	CK FJD 9-28-88	DWG NO 61114-19	REV NO A

1. GRIDDLE ELEMENTS
2. GRIDDLE PILOT LAMP-480V
3. CONTACTOR - GRIDDLE
4. PWR CONNECT TERM BLK
5. TEMP CONTROL BOARD
6. 12 POSITION SWITCH
7. TOGGLE SWITCH
8. TRANSFORMER, CL2
9. PROBE
10. OVERTEMP STAT - GRID
11. TERMINAL BLOCK
12. HOOD PILOT LAMP
13. HOOD OVERTEMP STAT #1
14. FUSES
15. CONTACTOR - HOOD
16. TIMER PLUGS
17. HOOD ELEMENTS
18. HOOD TILT SWITCH
19. HOOD OVERTEMP STAT #2
20. HOOD OVERTEMP STAT #3
21. CLAMSHELL PILOT LAMP-250V
22. GRIDDLE PILOT LAMP-28V

STAR MANUFACTURING INTERNATIONAL INC.
10 SUNNEN DRIVE
ST. LOUIS, MO. 63143, USA

THIS DRAWING CONTAINS INFORMATION CONFIDENTIAL TO STAR MFG. INT'L INC. NO REPRODUCTION OR DISCLOSURE OF ITS CONTENTS IS PERMITTED

MATERIAL			MODEL NO.	PART NO. 2M-61114-W65
FINISH			TITLE W/D 5' SELECTRONIC ELECT GRID W/ CSE12 HOODS - 480V	
DR: DJS	CK.	DATE: 10/12/2009		
TOLERANCE: UNLESS NOTED: .xxx ± .015 ANGLES ± 1°		REVISIONS	REV.	DATE/ECO	DESCRIPTION OF CHANGE	DR

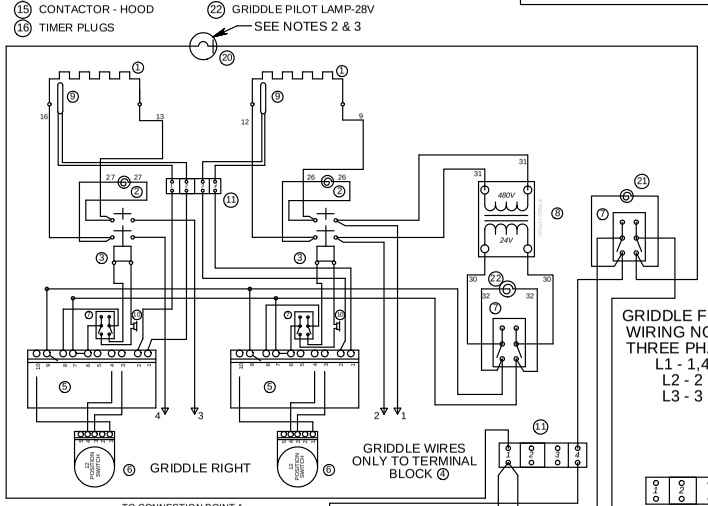

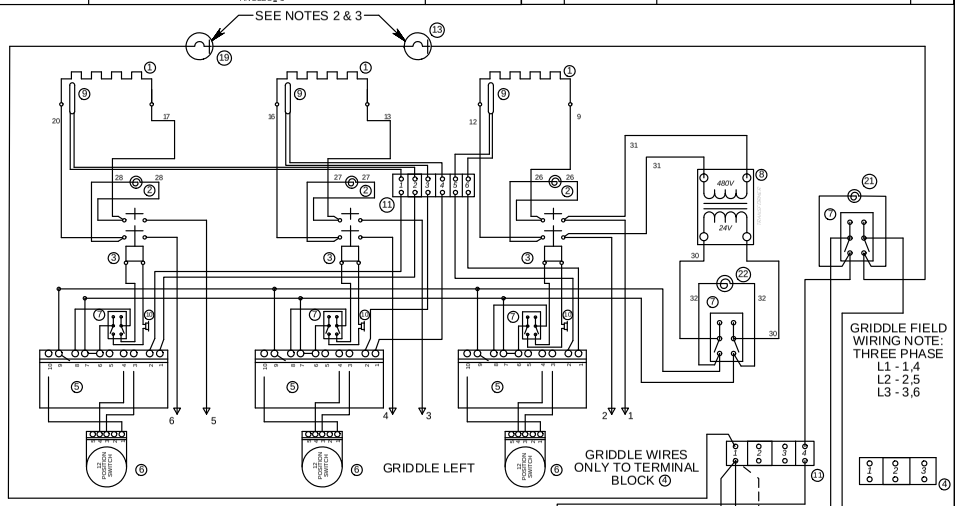

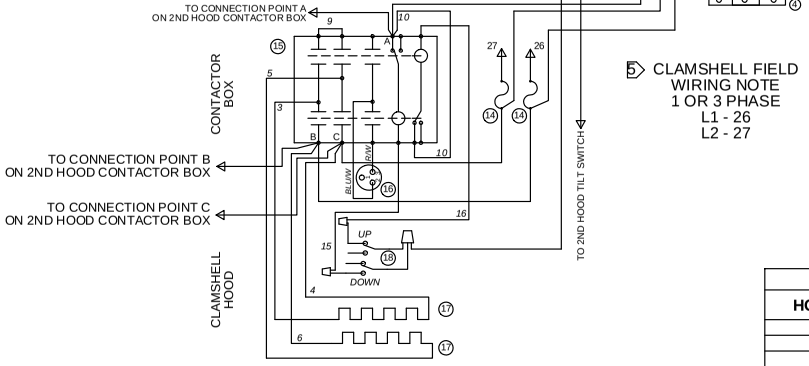

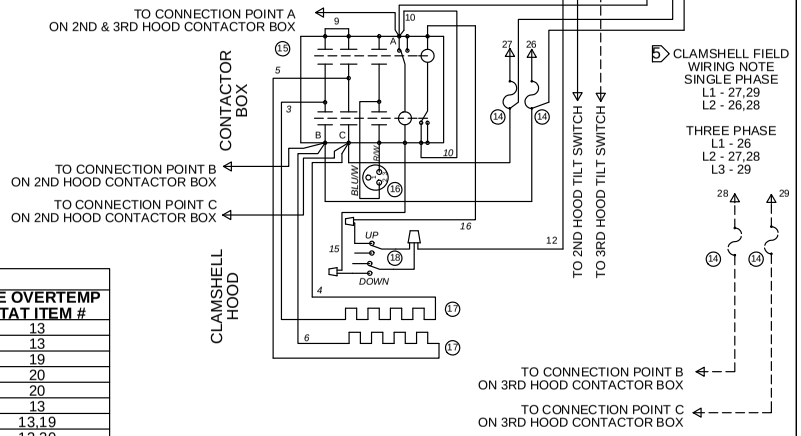

NOTES:
1. FUSE BLOCK PAIR REQUIED FOR EVERY 1 OR 2 CLAMSHELL COMBINATION ON EACH POWER CONNECTION.
2. OVERTEMP STATS ARE LOCATED ON THE UNDERSIDE OF THE GRIDDLE PLATE.
3. SEE TABLE 1 FOR ITEM 13,19 & 20 USAGE.
4. ------ DASHED COMPONENTS ARE REQURED ONLY WHEN 3 HOODS ARE USED ON ONE POWER CONNECTION.
5. CLAMSHELL VOLTAGE MAY BE DIFFERENT THAN GRIDDLE VOLTAGE. SEE CLAMSHELL NAMEPLATE FOR PROPER VOLTAGE FOR CLAMSHELL.

TOP VIEW OF GRIDDLE

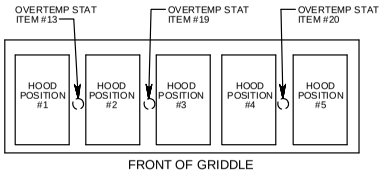

TABLE 1

HOOD POSITION #	USE OVERTEMP STAT ITEM #
1	13
2	13
3	19
4	20
5	20
1,2	13
1,3	13,19
1,4	13,20
1,5	13,20
2,3	19
2,4	13,20
2,5	13,20
3,4	19,20
3,5	19,20
4,5	20
1,2,3	13,19
1,2,4	13,20
1,2,5	13,20
1,4,5	13,20

TABLE 1

HOOD POSITION #	USE OVERTEMP STAT ITEM #
2,3,4	19,20
2,3,5	19,20
2,4,5	13,20
3,4,5	19,20
1,2,4,5	13,20
2,3,4,5	19,20
ALL OTHER COMBINATIONS	13,19 & 20

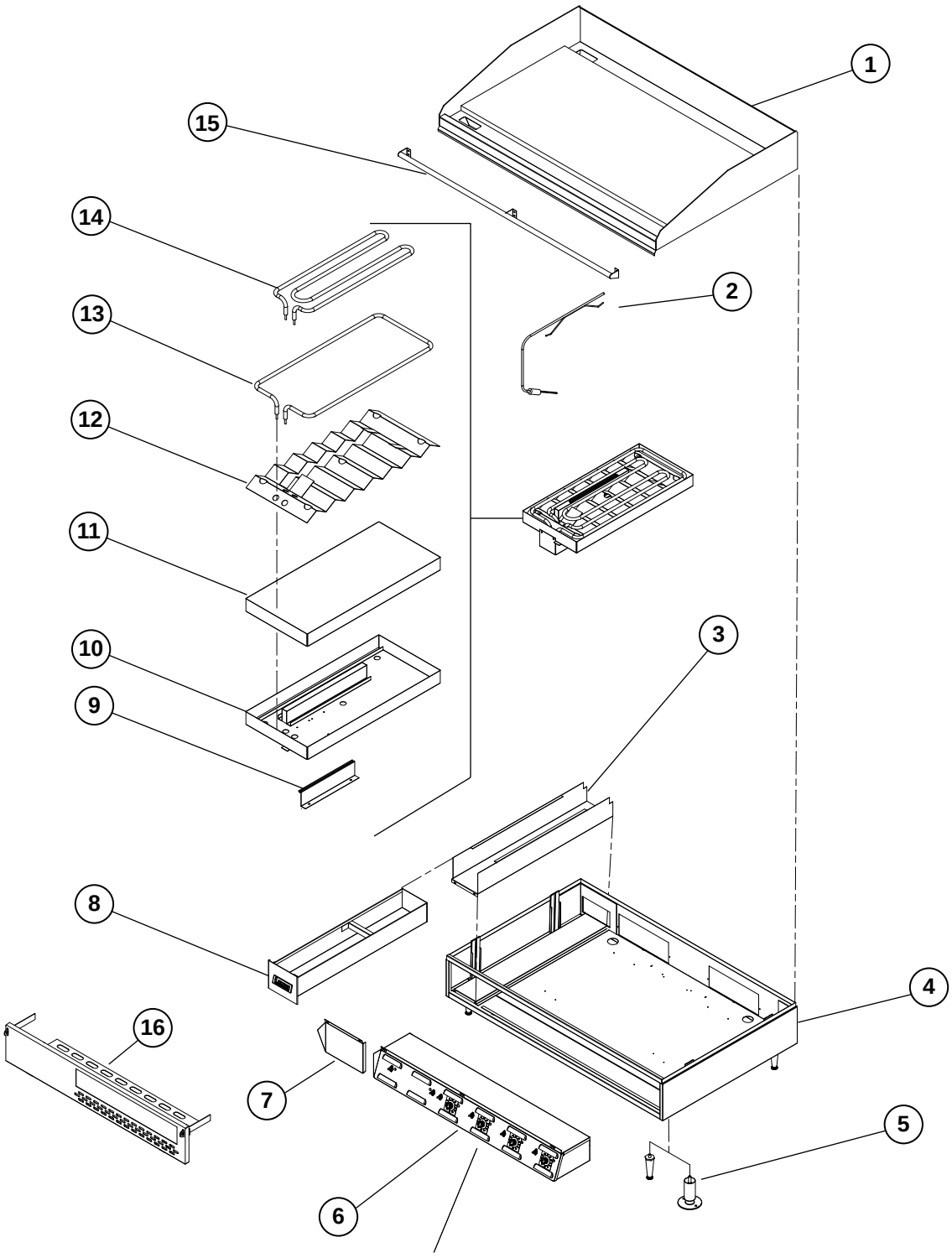

For individual parts
SEE DETAIL A

SOME ITEMS ARE INCLUDED FOR
ILLUSTRATIVE PURPOSES AND IN
CERTAIN INSTANCES MAY NOT BE AVAILABLE

This drawing contains information confidential
to Star Manufacturing International, Inc.
No reproduction or disclosure of it's
contents is permitted.

Model:
124S - 172S Selectronic Control Electric Griddle
LG Electric Griddle Accu-Temp Control

SK2263 Rev. C 1/17/12

PARTS LIST

December 9, 2011, Rev G

Model: 124S, 124S-480V, 124SHE, 124SCHE, Selectronic Electric Griddle				
FIG NO.	PART NO.	QTY	DESCRIPTION	APPLICATION
1	K9-XL-722-15	1	PLATE ASY 2' SEL .5 GRV	124S, 124S-480V
	K9-XL-722-154		PLTEASY 2' SEL.5GRVW/XLH12	124SHE
	K9-XL-722-C154		PLT ASSY 2' SEL .5" GRV CHR	124SCHE
2	2E-41100-17	2	TEMP PROBE SEL LG GRIDDLE	124S, 124S-480V, 124SHE
3	K9-XL-228	1	BUCKET SLIDE ASSY	ALL
4	K9-LG-BODY-2	1	BLANK BODY LG & XL 2FT	ALL
5	2A-Z0314	4	FOOT, 4" DIE CAST	124S, 124S-480V, 124SHE
	2A-72500-05		LEG 4 W/BOLT DOWN ADJ	MARINE
6	K9-LGPS2-C	1	PNEL XL-LG SEL 2' 208/240V	124S
	K9-LGPS2-C-W1		PNEL SEL 2' 208/240V W/CSE	124SHE
	K9-LGPS2-U		PNEL XL-LG SEL 2' 480V	124S-480V
7	K9-XL-235-1	1	GREASE BUCKET ASSY S/S	ALL
8	K9-XL-441	2	PROBE HOLDER SELECTRONIC	ALL
9	K9-XL-434	2	ELEMENT PAN ASSEMLBY	ALL
10	2H-XL-424	2	ELEMENT PAN INSULATION	ALL
11	K9-XL-439	2	ELEMENT PAN Z ASSEMBLY	ALL
12	2N-11030-30	2	ELMNT GRID 208V 1257W	124S, 124S-480V, 124SHE, 124SCHE
13	2N-11030-29	2	ELE GRD 208/240V4.5KW/6KW	124S, 124S-480V, 124SHE, 124SCHE
	2N-11030-31		ELMNT GRID 480V 5991W	124S-480V
	2N-11030-48		ELE GRD 440V 5991W XL/LG	124S-440VM
14	K9-50302-14	1	2' GRAB BARASSY XL-LG	MARINE
NI	2E-30500-02	1	TRM STRP 4 POLE 30A 600V	124S, 124S-480V, 124SHE
NI	2E-30500-07	1	TRM BLOCK 3PLELRGE 125AMP	124S, 124S-480V, 124SHE
NI	2E-30501-03	1	TERM STRP 4 POLE W/PUSH	124S, 124S-480V, 124SHE
NI	2P-50100-05		GROOVED GRIDDLE CLEANING	ALL
NI	2P-50100-051		GRVED GRDLE BRUSH REPL	ALL
NI	2P-50100-052		GRVED GRDLE BRUSH REPL	ALL

IMPORTANT: WHEN ORDERING, SPECIFY VOLTAGE OR TYPE GAS DESIRED
INCLUDE MODEL AND SERIAL NUMBER

Some items are included for illustrative purposes only and in certain instances may not be available.

Lang

PARTS LIST

December 9, 2011, Rev G

Model No: 136S, 136S-SC, 136S-380VM, 136S-480V Selectronic Electric Griddle				
FIG NO	PART NO.	QTY	DESCRIPTION	APPLICATION
1	K9-XL-722-16	1	PLATE ASY 3' SEL .5 GRV	136S
	K9-XL-722-W162		PLATE ASY 3' SEL.5 GRV CHR	136SC
2	2E-41100-17	3	TEMP PROBE SEL LG GRIDDLE	ALL
3	K9-XL-228	1	BUCKET SLIDE ASSY	ALL
4	K9-LG-BODY-3	1	BLANK BODY LG & XL 3FT	ALL
5	2A-Z0314	4	FOOT, 4" DIE CAST	136S, 480V
	2A-72500-05		LEG 4 W/BOLT DOWN ADJ	MARINE
	2A-200716		LEG, 2.5" METAL	136S-SC
6	K9-LGPS3-C	1	PANEL XL-LG SEL 3' 208/240V	136S
	K9-LGPS3-K		PANEL CL-LG SEL 3' 380V	136S-380VM
	K9-LGPS3-U		PANEL XL-LG SEL 3' 480V	136S-480V
7	K9-XL-235-1	1	GREASE BUCKET ASSY S/S	ALL
8	K9-XL-441	3	PROBE HOLDER SELECTRONIC	ALL
9	K9-XL-434	3	ELEMENT PAN ASSEMLBY	ALL
10	2H-XL-424	3	ELEMENT PAN INSULATION	ALL
11	K9-XL-439	3	ELEMENT PAN Z ASSEMBLY	ALL
12	2N-11030-30	3	ELMNT GRID 208V 1257W	136S
13	2N-11030-29	3	ELE GRD 208/240V4.5KW/6KW	136S
	2N-11030-04		ELMNT GRID 380V 5991W	136S-380V, 380VM
	2N-11030-31		ELMNT GRID 480V 5991W	136S-480V
	2N-11030-48		ELE GRD 440V 5991W XL/LG	136S-440VM
14	K9-50302-15	1	3' GRAB BARASSY XL-LG	MARINE
NI	2E-30500-03	1	TRM STRP 6 POLE 30A 300V	136S, 480V
NI	2E-30500-05	1	TRM STRP 8 POLE 30A 300V	136S, 480V
NI	2P-50100-05		GROOVED GRIDDLE CLEANING	ALL
NI	2P-50100-051		GRVED GRDLE BRUSH REPL	ALL
NI	2P-50100-052		GRVED GRDLE BRUSH REPL	ALL

IMPORTANT: WHEN ORDERING, SPECIFY VOLTAGE OR TYPE GAS DESIRED
INCLUDE MODEL AND SERIAL NUMBER

Some items are included for illustrative purposes only and in certain instances may not be available.

Lang

PARTS LIST

December 9, 2011, Rev G

Model No: 148S, 148S-480V, 148S-SC, 148S-WB Selectronic Electric Griddle				
FIG NO	PART NO.	QTY	DESCRIPTION	APPLICATION
1	K9-XL-719-4	1	PLATE ASY 4'SEL REAR GUTR	148S-WB, 148SR
	K9-XL-722-17		PLATE ASY 4' SEL .5 GRV	148S
	K9-XL-722-174		PLTEASY 4' SEL.5GRVW/XLH12	148SHE-480V
2	2E-41100-17	4	TEMP PROBE SEL LG GRIDDLE	ALL
3	K9-XL-228	1	BUCKET SLIDE SUPPORT	148S, 148S-SC
	K9-XL-228-30		BUCKET WRAP REAR GUTTER	148S-WB, 148SR
4	K9-XL-219-6	1	BODY ASSEMBLY 4' XL	ALL
5	2A-Z0314	4	FOOT, 4" DIE CAST	148S, 148S-SC
	2A-72500-05		LEG 4 W/BOLT DOWN ADJ	MARINE
	2A-200716		LEG, 2.5" METAL	148S-SC
6	K9-LGPS2-CWB-4	1	PNL LG-S 2' 208/240V WB 4' BDY	148S-WB, 148SR
	K9-LGPS4-C		PANEL XL-LG SEL 4' 208/240V	148S
	K9-LGPS4-U		PANEL XL-LG SEL 4' 480V	148S-480V, 148S-SC
	K9-LGPS4-U-W1		PANEL XL ASSY-LG SEL 4'	148SHE-480V
7	K9-XL-235-1	1	GREASE BUCKET ASSY S/S	148S
	K9-XL-235-30		GREASE BKT ASY REAR GUTER	148S-WB, 148SR
8	K9-XL-441	4	PROBE HOLDER SELECTRONIC	ALL
9	K9-XL-434	4	ELEMENT PAN ASSEMLBY	ALL
10	2H-XL-424	4	ELEMENT PAN INSULATION	ALL
11	K9-XL-439	4	ELEMENT PAN Z ASSEMBLY	ALL
12	2N-11030-30	4	ELMNT GRID 208V 1257W	148S
13	2N-11030-29	4	ELE GRD 208/240V4.5KW/6KW	148S
	2N-11030-48		ELEM GRID 440V 5991W	148S-440V
	2N-11030-31		ELMNT GRID 480V 5991W	148S-480V
14	K9-50302-16	1	4' GRAB BAR ASSY XL-LG	148S-WB, 148SR, MARINE
NI	2E-30500-02	2	TRM STRP 4 POLE 30A 600V	148S-WB, 148SR
NI	2E-30500-05	1	TRM STRP 8 POLE 30A 300V	148S
NI	2E-30500-07	1	TRM BLOCK 3PLELRGE 125AMP	148S
NI	2E-30500-07	2	TRM BLOCK 3PLELRGE 125AMP	148S-WB, 148SR
NI	2E-30501-03	1	TERM STRP 4 POLE W/PUSH	148S, 148S-SC
NI	2E-30501-03	2	TERM STRP 4 POLE W/PUSH	148S-WB, 148SR
NI	2P-50100-05		GROOVED GRIDDLE CLEANING	ALL
NI	2P-50100-051		GRVED GRDLE BRUSH REPL	ALL
NI	2P-50100-052		GRVED GRDLE BRUSH REPL	ALL

IMPORTANT: WHEN ORDERING, SPECIFY VOLTAGE OR TYPE GAS DESIRED
INCLUDE MODEL AND SERIAL NUMBER

Some items are included for illustrative purposes only and in certain instances may not be available.

Lang

PARTS LIST

December 9, 2011, Rev G

Model No: 160S, 160S-480V, 160S-SC, 160S-WB, 160SHE Selectronic Electric Griddle				
FIG NO	PART NO.	QTY	DESCRIPTION	APPLICATION
1	K9-XL-719-5	1	PLATE ASY 5'SEL REAR GUTR	160S-WB, 160SR
	K9-XL-722-18		PLATE ASY 5' SEL .5 GRV	160S
	K9-XL-722-184		PLATE ASY 5 GRV W/ XLH12	160SHE
2	2E-41100-17	5	TEMP PROBE SEL LG GRIDDLE	160S,160S-SC, 160SHE
3	K9-XL-228	2	BUCKET SLIDE SUPPORT	160S
	K9-XL-228-30	1	BUCKET WRAP REAR GUTTER	160S-WB, 160SR
4	K9-LG-BODY-2	1	BLANK BODY LG & XL 2FT	ALL
	K9-LG-BODY-3		BLANK BODY LG & XL 3FT	
5	2A-Z0314	8	FOOT, 4" DIE CAST	160S,160S-SC, 160SHE
	2A-72500-05		LEG 4 W/BOLT DOWN ADJ	MARINE
	2A-200716		LEG, 2.5" METAL	160S-SC
6	K9-LGPS2-C	1	PANEL XL-LG SEL 2' 208/240V	160S, 160S-SC, 160SHE
	K9-LGPS2-CWB		PANEL XL-LG SEL 2' 208/240V WB	160S-WB, 160SR
	K9-LGPS2-U		PANEL XL-LG SEL 2' 480V	160S-480V
	K9-LGPS3-C		PANEL XL-LG SEL 3' 208/240V	160S, 160S-SC
	K9-LGPS3-U		PANEL XL-LG SEL 3' 480V	160S-480V
7	K9-XL-235-1	2	GREASE BUCKET ASSY S/S	160S, 160SHE
	K9-XL-235-30		GREASE BKT ASY REAR GUTER	160S-WB, 160SR
8	K9-XL-441	5	PROBE HOLDER SELECTRONIC	ALL
9	K9-XL-434	5	ELEMENT PAN ASSEMLBY	ALL
10	2H-XL-424	5	ELEMENT PAN INSULATION	ALL
11	K9-XL-439	5	ELEMENT PAN Z ASSEMBLY	ALL
12	2N-11030-30	5	ELMNT GRID 208V 1257W	160S, 160SHE
13	2N-11030-29	5	ELE GRD 208/240V4.5KW/6KW	160S, 160SHE
	2N-11030-31		ELMNT GRID 480V 5991W	160S-480V, 160SHE-480V
14	K9-50302-17	1	5' GRAB BARASSY XL-LG	MARINE
NI	2E-30500-02	1	TRM STRP 4 POLE 30A 600V	160S, 160SHE
NI	2E-30500-03	1	TRM STRP 6 POLE 30A 300V	160S, 160SHE
NI	2E-30500-07	2	TRM BLOCK 3PLELRGE 125AMP	160S, 160SHE
NI	2E-30501-03	1	TERM STRP 4 POLE W/PUSH	160S, 160SHE
NI	2E-30501-05	2	TRM STRP 6 POLE W/2PUSH	160S, 160SHE
NI	2P-50100-05		GROOVED GRIDDLE CLEANING	
NI	2P-50100-051		GRVED GRDLE BRUSH REPL	
NI	2P-50100-052		GRVED GRDLE BRUSH REPL	
NI	K9-50302-17	1	5' GRAB BAR ASSY XL-LG	160S-WB, 160SR

IMPORTANT: WHEN ORDERING, SPECIFY VOLTAGE OR TYPE GAS DESIRED
INCLUDE MODEL AND SERIAL NUMBER

Some items are included for illustrative purposes only and in certain instances may not be available.

Lang

PARTS LIST

January 17, 2012, Rev G

Model No: 172S, 172S-480V, 172S-SC, 172S-480VM Selectronic Electric Griddle				
FIG NO	PART NO.	QTY	DESCRIPTION	APPLICATION
1	K9-XL-722-19	1	PLATE ASY 6' SEL .5 GRV	ALL
2	2E-41100-17	6	TEMP PROBE SEL LG GRIDDLE	ALL
3	K9-XL-228	2	BUCKET SLIDE SUPPORT	ALL
4	K9-XL-219-4	2	BODY ASSEMBLY 3' XL	ALL
5	2A-Z0314	8	FOOT, 4" DIE CAST	172S
	2A-72500-05		LEG 4 W/BOLT DOWN ADJ	MARINE
	2A-200716		LEG, 2.5" METAL	172S-SC
6	K9-LGPS3-C	2	PANEL XL-LG SEL 3' 208/240V	172S, 172S-SC
	K9-LGPS3-U		PANEL XL-LG SEL 3' 480V	172S-480V
7	K9-XL-235-1	2	GREASE BUCKET ASSY S/S	ALL
8	K9-XL-441	6	PROBE HOLDER SELECTRONIC	ALL
9	K9-XL-434	6	ELEMENT PAN ASSEMLBY	ALL
10	2H-XL-424	6	ELEMENT PAN INSULATION	ALL
11	K9-XL-439	6	ELEMENT PAN Z ASSEMBLY	ALL
12	2N-11030-30	6	ELMNT GRID 208V 1257W	172S
13	2N-11030-29	6	ELE GRD 208/240V4.5KW/6KW	172S
	2N-11030-31		ELMNT GRID 480V 5991W	172S-480V, 172S-480VM
	2N-11030-48		ELE GRD 440V 5991W XL/LG	172S-440VM
14	K9-50302-18	1	6' GRAB BARASSY XL-LG	MARINE
16	K9-XL-759-3	1	PANEL COVER ASSY 3' - CP	172S-CP
NI	2E-30500-03	2	TRM STRP 6 POLE 30A 300V	172S
NI	2E-30500-07	2	TRM BLOCK 3PLELRGE 125AMP	172S
NI	2E-30501-05	2	TRM STRP 6 POLE W/2PUSH	172S
NI	2P-50100-05		GROOVED GRIDDLE CLEANING	
NI	2P-50100-051		GRVED GRDLE BRUSH REPL	

Some items are included for illustrative purposes only and in certain instances may not be available.

Lang

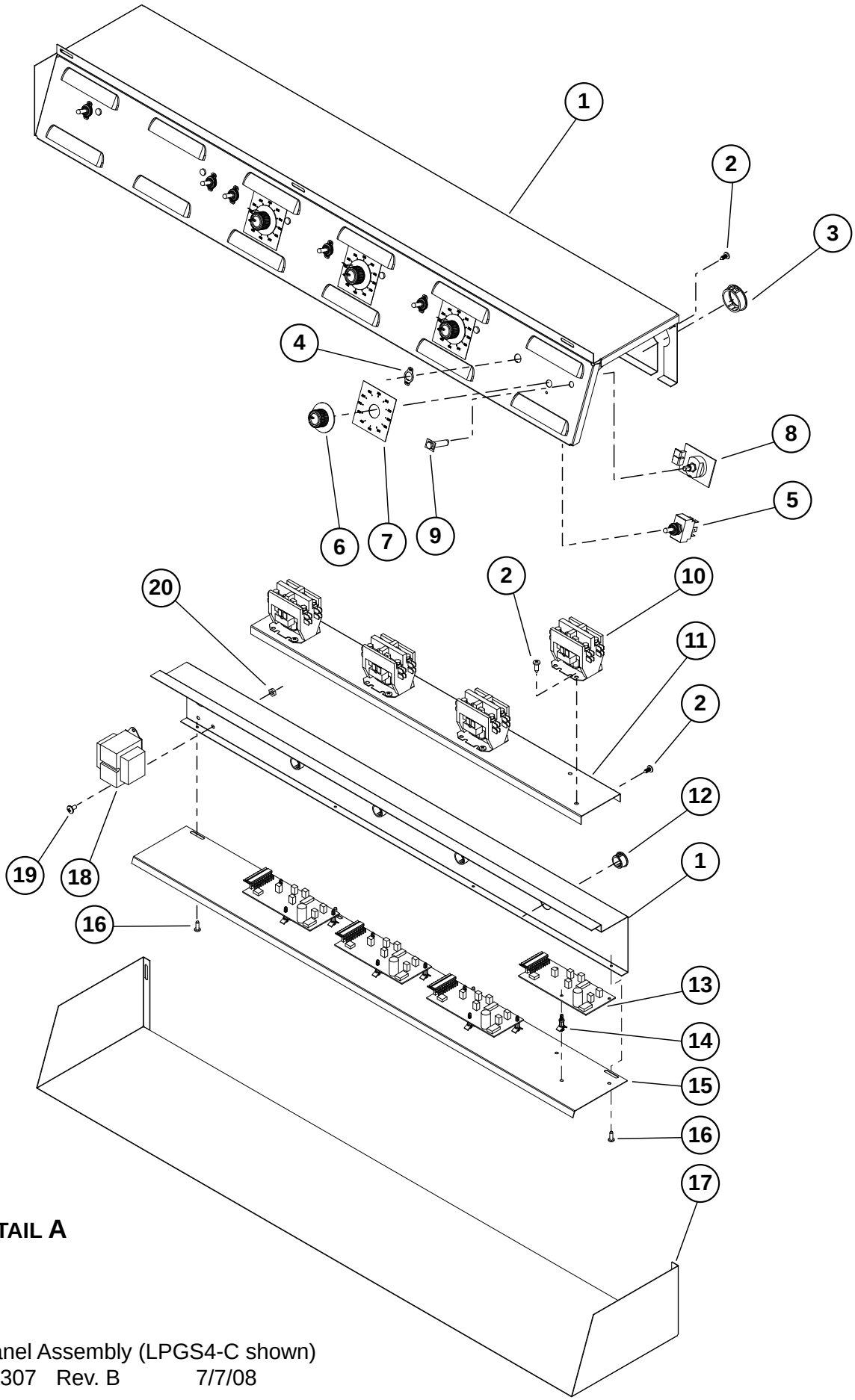

Control Panel Assembly (LPGS4-C shown)
SK2307 Rev. B 7/7/08

PARTS LIST

May 31, 2011, Rev G

Detail A: Control Panel Assembly, Selectronic Electric Griddle			
Model Number	Qty	Description	Control Panel Assembly
124S	1	PNEL XL-LG SEL 2' 208/240V	LGPS2-C-W1
124S-480V	1	PNEL XL-LG SEL 2' 480V	LGPS2-U-W1
124SHE, 148SCHE	1	PNEL SEL 2' 208/240V W/CSE	LGPS2-C-W1
136S	1	PANEL XL-LG SEL 3' 208/240V	LGPS3-C-W1
136S-SC	1	PANEL XL-LG SEL 3' 208/240V	LGPS3-C-W1
136S-380VM	1	PANEL CL-LG SEL 3' 380V	LGPS3-K
136S-480V	1	PANEL XL-LG SEL 3' 480V	LGPS3-U-W1
136SHE	1	PNEL SEL 3'208/240V W/CSE	LGPS3-C-W1
148S, 148S-SC	1	PANEL XL-LG SEL 4' 208/240V	LGPS4-C
148S-480V, 148S-440/480VM	1	PANEL XL-LG SEL 4' 480V	LGPS4-U
148SHE-480V	1	PANEL SL ASSY-LG SEL 4'	LGPS4-U-W1
148S-WB, 148SR	2	PNL LG-S 2' 208/240V WB 4' BDY	LGPS2-CWB-4
160S, 160S-SC, 160SHE	1	PANEL XL-LG SEL 3' 208/240V	LGPS3-C-W1
160S, 160S-SC, 160SHE	1	PANEL XL-LG SEL 2' 208/240V	LGPS2-C-W1
160S-480V, 160SHE-480V	1	PANEL XL-LG SEL 2' 480V	LGPS2-U-W1
160S-480V, 160SHE-480V	1	PANEL XL-LG SEL 3' 480V	LGPS3-U-W1
160S-WB, 160SR	1	PANEL XL-LG SEL 2' 208/240V WB	LGPS2-CWB
172S, 172S-SC	2	PANEL XL-LG SEL 3' 208/240V	LGPS3-C-W1
172S-480V	2	PANEL XL-LG SEL 3' 480V	LGPS3-U-W1

Control Panel Parts Listing				
Fig No	Part Number	Qty	Description	Control Panel Assembly
1	K9-XL-725-03	1	ELECT BOX ASY 2' LG SEL	LGPS2-C, LGPS2-U
	K9-XL-725-030		ELECT BOX ASY 4' LG SEL	LGPS2-CWB-4
	K9-XL-725-030		ELECT BOX ASY 4' LG SEL	LGPS2-CWB-4
	K9-XL-725-032		ELECT BOX ASY 2' LG SEL	LGPS2-CWB
	K9-XL-725-03-W1		ELE BOX ASSY 2' SEL W/CSE	LGPS2-C-W1
	K9-XL-725-07		ELECT BOX ASY 3' LG SEL	LGPS3-C, LGPS3-U, LGPS3-K
	K9-XL-725-071		ELECT BOX ASY 3' SEL W/CSE	LGPS3-C-W1
	K9-XL-725-11		ELECT BOX ASY 4' LG SELECT	LGPS4-C, LGPS4-U
	K9-XL-725-13		ELEC BOX ASSY 4' SEL	LGPS4-U-W1
2	2C-20103-02	14	SCRW SM PLT 10 X .5 PHLSL	LGPS2-C, LGPS2-U
		22		LGPS3-C, LGPS3-U, LGPS3-C-W1, LGPS3-K
		26		LGPS4-C, LGPS4-U, LGPS4-U-W1
3	2K-70801-02	2	SNAP BUSH 1 3/8 SB1375-16	LGPS4-C, LGPS4-U, LGPS3-K
4	2E-30303-05	3	SWT PLATE ON/OFF	LGPS2-C, LGPS2-U
		4		LGPS3-C, LGPS3-U, LGPS3-C-W1, LGPS3-K
		5		LGPS4-C, LGPS4-U, LGPS4-U-W1
5	2E-30303-06	3	SWT TOG ON-ON DPDT BLK	LGPS2-C, LGPS2-U
		4		LGPS3-C, LGPS3-U, LGPS3-K
		5		LGPS4-C, LGPS4-U, LGPS4-U-W1
6	2R-70701-28	2	KNB BLK 1/4BUSH2SETSCW@90	LGPS2-C, LGPS2-U
		3		LGPS3-C, LGPS3-U, LGPS3-K
		4		LGPS4-C, LGPS4-U
7	2M-60301-29	2	PNLLBL SELCT SWTDIAL 450o	LGPS2-C, LGPS2-U
		3		LGPS3-C, LGPS3-U
		4		LGPS4-C, LGPS4-U

PARTS LIST

May 31, 2011, Rev G

Fig No	Part Number	Qty	Description	Control Panel Assembly
8	2E-30304-22	2	SWTCB175-450oFW/41100-13	LGPS2-C, LGPS2-U
		3		LGPS3-C, LGPS3-U, LGPS3-K
		4		LGPS4-C, LGPS4-U, LGPS4-U-W1
9	2J-31601-01	3	PILOT LT 250V 6LEAD BLK	LGPS2-C
		4		LGPS3-C, LGPS3-U
		5		LGPS4-C
	2J-31601-02	2	PILOT LT 480V 6LEAD BLK	LGPS2-U
		3		LGPS3-U, LGPS3-K
		4		LGPS4-U, LGPS4-U-W1
	2J-31601-07	1	PILOT LT 28V 6 LEAD WHT	LGPS2-U, LGPS4-U, LGPS4-U-W1, LGPS3-K
10	2E-30701-04	2	CONTC 2POLE 30A 24VAC	LGPS2-C, LGPS2-U
		3		LGPS3-C, LGPS3-U, LGPS3-K
		4		LGPS4-C, LGPS4-U, LGPS4-U-W1
11	K9-XL-522-11	1	CPMTACT. MNT PLT 2' SEL	LGPS2-C, LGPS2-U
	K9-XL-522-12		CNTR MT PLT 3' SLCTRNC LG	LGPS3-C, LGPS3-U, LGPS3-K
	K9-XL-522-13		CONT. MNT PLT 4' SELEC LG	LGPS4-C, LGPS4-U
12	2K-70801-04	4	SNAP BUSH 3/4 SB750-10	LGPS2-U
		5		LGPS3-C, LGPS3-U, LGPS3-K
		6		LGPS4-C, LGPS4-U
13	2E-40101-W19	2	CIRBD SI TEMP CNTRL NO	LGPS2-C, LGPS2-U
		3		LGPS3-C, LGPS3-U, LGPS3-K
		4		LGPS4-C, LGPS4-U, LGPS4-U-W1
14	2K-70801-07	6	SPACER SUPPORT 1/2LG	LGPS3-C, LGPS2-U
		9		LGPS3-C, LGPS3-U, LGPS3-K
		12		LGPS4-C, LGPS4-U
15	K9-XL-522-10	1	CIRC BRD MNT 4'	LGPS4-C, LGPS4-U
	K9-XL-522-8		CIRCUIT BOARD MOUNT	LGPS2-C, LGPS2-U
	K9-XL-522-9		CIRC BOARD MOUNT 3'	LGPS3-C, LGPS3-U
16	2C-20102-04	3	SCRW PHD ST 8-32X.5 PLTD	LGPS2-C, LGPS2-U, LGPS3-C, LGPS3-C-W1, LGPS3-U
		4		LGPS4-C, LGPS4-U, LGPS4-U-W1
17	K9-XL-502-31	1	ELECT BOX CVER 4' SEL	LGPS4-U-W1
	K9-XL-524-3		ELECT BOX CVER SPT 3' SEL	LGPS3-C, LGPS3-U, LGPS3-K
	K9-XL-524-4		ELECT BOX CVER SPT 4' SEL	LGPS4-C, LGPS4-U
	K9-XL-524-5		ELECT BOX CVER SPT 2' SEL	LGPS2-C, LGPS2-U
18	2E-31400-07	1	XFORMR120-208-240/24V40VA	LGPS2-C, LGPS3-C, LGPS4-C
	2E-31400-18		XFORMR 380/24VAC 40VA U/L	LGPS3-K
	2E-31400-W36		XFRNR 480V/24V CL2 40VA	LGPS2-U, LGPS2-U-W1, LGPS3-U, LGPS3-U-W1, LGPS4-U, LGPS4-U-W1
19	2C-20101-24	2	SCRW MS PLT 10-32 X .375	ALL
20	2C-20301-15	2	NUT HEX 10-32 PLTD	ALL
NI	2E-30501-05	1	TRM STRP 6 POLE W/2PUSH	LGPS3-K
NI	2T-30401-32	2	STAT FXD 400°F DEG OPEN	LGPS2-C, LGPS2-C-1, LGPS2-C-W1, LGPS2-CWB, LGPS2-CWB-4, LGPS2-U
NI	2T-30401-32	3	STAT FXD 400°F DEG OPEN	LGPS3-C, LGPS3-C-W1, LGPS3-CWB, LGPS3-U, LGPS3-K
NI	2T-30401-32	4	STAT FXD 400°F DEG OPEN	LGPS4-C, LGPSA-C-W1, LGPS4-U, LGPS4-U-W1

Lang