Middleby Marshall®

A MIDDLEBY COMPANY

PS570G SERIES GAS FIRED:

SPL 102406-PF-BD
October 24, 2006
Replaces
SPL 071406-PF-BD
July 14, 2006

Parts Manual

with Wiring Diagrams
for domestic and standard export ovens

Serial # Code (Nine Digit Code)
(for units produced prior to mid-July, 2006)
First 4 digits - order of production
Fifth digit - model specific
Sixth and Seventh digit - month of production
Eighth and Ninth digit - year of production

Serial # Code (Ten Digit Code)
(for units produced after mid-July, 2006)
First 5 digits - order of production
Sixth digit - model specific
Seventh and Eighth digit - month of production
Ninth and Tenth digit - year of production

The PS570G replaced the PS570S.
They are different!
The PS570G requires a 208/240V, 1 Phase Power Supply.
Therefore the Control Circuit is 208/240V.
A Modulating Gas Valve and Signal Amplifier Board were incorporated to reduce energy consumption and increase cooking efficiency.
We call this our Energy Management System (EMS).

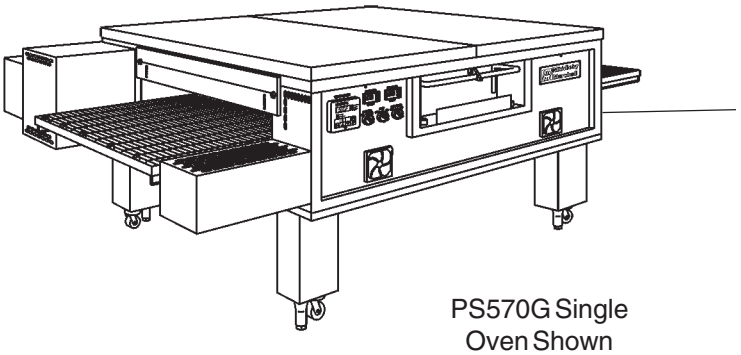

PS570G Single
Oven Shown

Table of Contents: Page 2

www.middleby.com
email: techsupport@middleby.com
1-847-741-3300 fax 1-847-741-4406
1400 Toastmaster Drive • Elgin, IL 60120

©2005 Middleby Marshall Inc.

Table of Contents

Specification Sheet 3
Key Parts 7
View of Installation and Base Pad Kit(s) 8
Parts for Installation and Base Kit(s) 9
View of Oven Panels, End Plugs, Window and Legs 10
Parts for Oven Panels, End Plugs, Window and Legs 11
View of Front Control Area 12
Parts for Front Control Area 13
View of Gas Piping and Burner Assembly 14
Parts for Gas Piping and Burner Assembly 15
View of Rear Blower/Motor Assembly 16
Parts for Rear Blower/Motor Assembly 17
View of Rear Capacitor Area 18
Parts for Rear Capacitor Area 19
View of “Single” Belt Conveyor 20
Parts for “Single” Belt Conveyor 21
View of “50-50” Split Belt Conveyor 22
Parts for “50-50” Split Belt Conveyor 23
Standard Finger Configuration 31257 and Part Numbers 24
Wiring Diagram, G208-240 volt 50/60 Hz, 1 Phase, US, 45520 Rev E 2 of 2 25
Ladder Diagram, G208-240 volt 50/60 Hz, 1 Phase, US, 45520 Rev E 1 of 2 26
Wiring Diagram, G208-240 volt 50/60 Hz, 1 Phase, AU, 46978 Rev D 27
Wiring Diagram, G208-240 volt 50/60 Hz, 1 Phase, CAN, 47285 Rev C 28
Wiring Diagram, G230 volt 50 Hz, 1 Phase, CE, DN 47263 Rev C 29
Wiring Diagram, G230 volt 50 Hz, 1 Phase, CE, DUT 47265 Rev C 30
Wiring Diagram, G230 volt 50 Hz, 1 Phase, CE, FR 47257 Rev C 31
Wiring Diagram, G230 volt 50 Hz, 1 Phase, CE, GM 47255 Rev C 32
Wiring Diagram, G230 volt 50 Hz, 1 Phase, CE, GK 47261 Rev C 33
Wiring Diagram, G230 volt 50 Hz, 1 Phase, CE, IT 47253 Rev C 34
Wiring Diagram, G230 volt 50 Hz, 1 Phase, CE, SP 47259 Rev C 35
Wiring Diagram, G230 volt 50 Hz, 1 Phase, CE, UK 45587 Rev F 2 of 2 36
Ladder Diagram, G230 volt 50 Hz, 1 Phase, CE, UK 45587 Rev F 1 of 2 37

Middleby® Marshall

CONVEYORS OF EXCELLENCE

A/A File No.: _____

Item No.: _____

PS570

Direct Gas Fired Conveyor Oven

Impingement PLUS!

energy management system

Principle

Middleby Marshall PS Series Conveyor ovens bake both faster and at a lower temperature than other ovens. Patented vertical columns of hot air move heat aerodynamically instead of using high temperatures. The streams of hot air remove the boundary layers of cool heavy air which tend to insulate the product. This gives very rapid baking without burning. All Middleby ovens are designed to cook a multitude of products including pizza, seafood, bagels, ethnic foods and more.

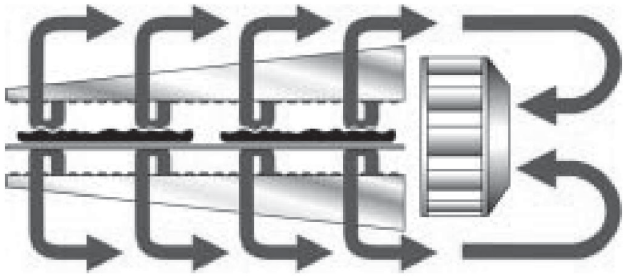

Standard Features

- **Impingement PLUS!** low oven profile and dual air return
- **Patented EMS Energy Management System** reduces gas consumption and increases cooking efficiency
- 70”/1778mm-long cooking chamber
- 32”/813mm-wide, 106”/2692mm-long conveyor belt
- Stackable up to four units high
- Patented “Jet Sweep” impingement process that delivers constant heat to the chamber
- Microprocessor-controlled bake time/conveyor speed
- Customer-specific adjustable jet fingers that allow control of heat delivery
- Stainless steel front, sides and top
- Front-loading window with cool handle
- Reversible conveyor direction

Optional Features

- Split belt - two 15”/381mm belts with individually-adjustable speed settings

Conserves Energy

Middleby ovens provide very efficient heat transfer to product. Energy is conserved as air is recycled from heater to product, with minimum flue or vent loss.

Cleanability

PS570 ovens are designed for easy cleaning. Removable parts include: crumb pans, end panels, air fingers, and a folding conveyor belt assembly.

Easily Serviced

Control compartment is designed for quick and easy access. All electrical controls are door-mounted.

Warranty

All PS570 models have a one year parts and labor warranty. Oven start-up and demonstration are included at no additional charge (USA only).

Ventilation

For installation under a ventilation hood only.

Middleby® Marshall

A MIDDLEBY COMPANY

1400 Toastmaster Drive
Elgin, Illinois 60120 USA
(847) 741-3300 Fax: (847) 741-0015
www.middleby.com

Form 4501

Middleby Marshall®
CONVEYORS OF EXCELLENCE

PS570 Series
Direct Gas Fired Conveyor Oven

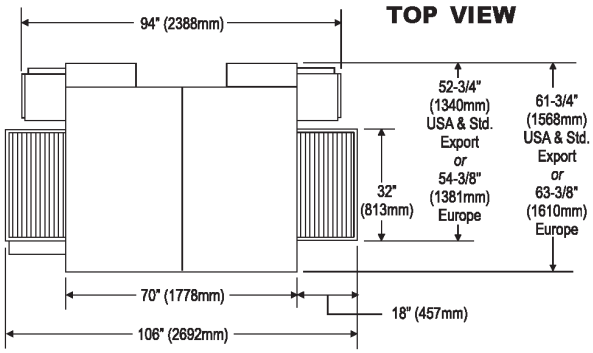

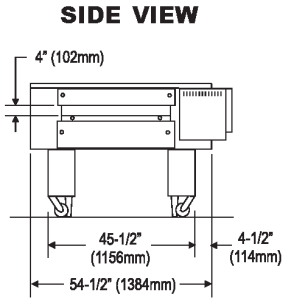

① Gas Utility Connection

② Electrical Utility Connection

PS570-1 Single Oven with 19" (483mm) leg extensions

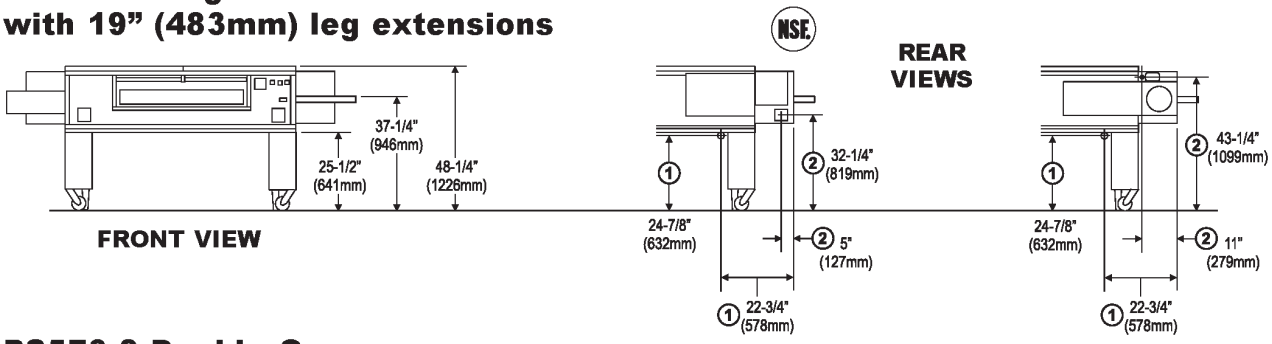

PS570-2 Double Oven with 10" (254mm) leg extensions

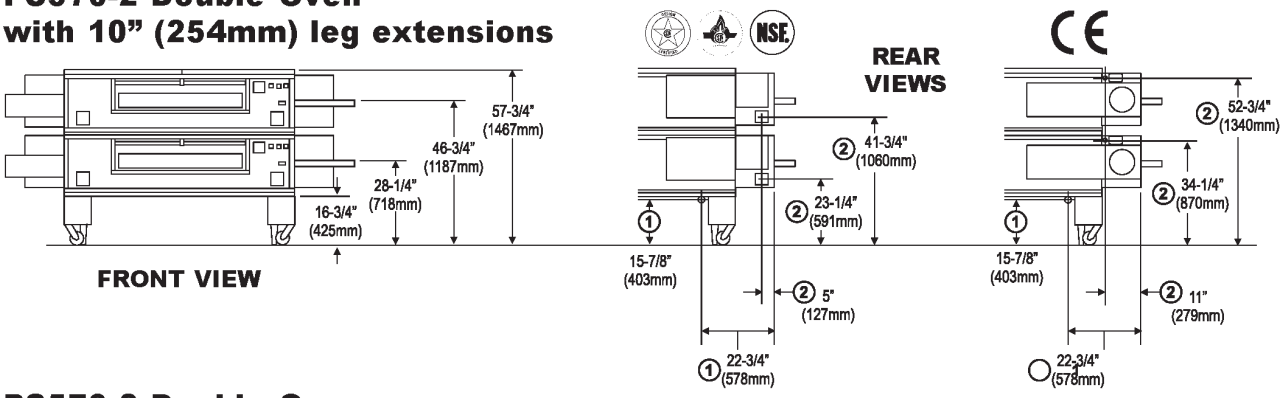

PS570-2 Double Oven with 15" (381mm) leg extensions

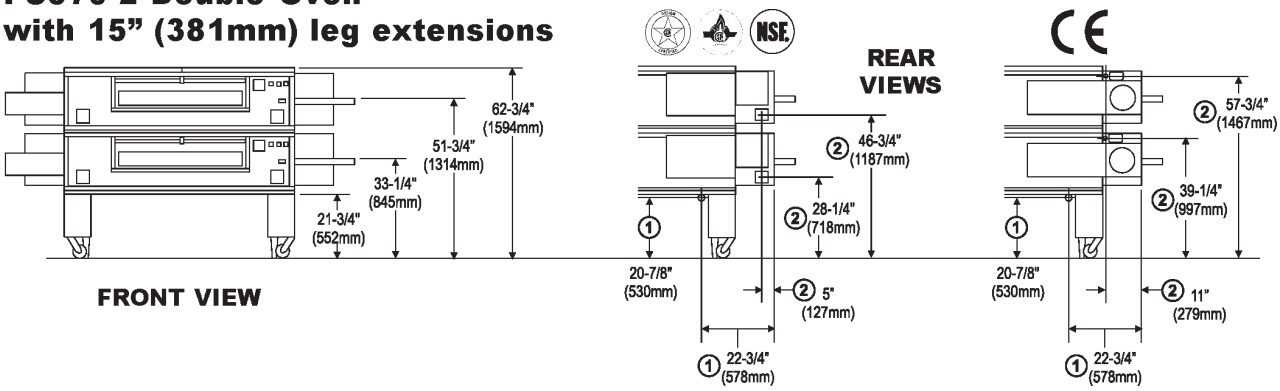

Middleby Marshall
CONVEYORS OF EXCELLENCE

PS570 Series
Direct Gas Fired Conveyor Oven

PS570-3 Triple Oven with 4" (102mm) leg extensions

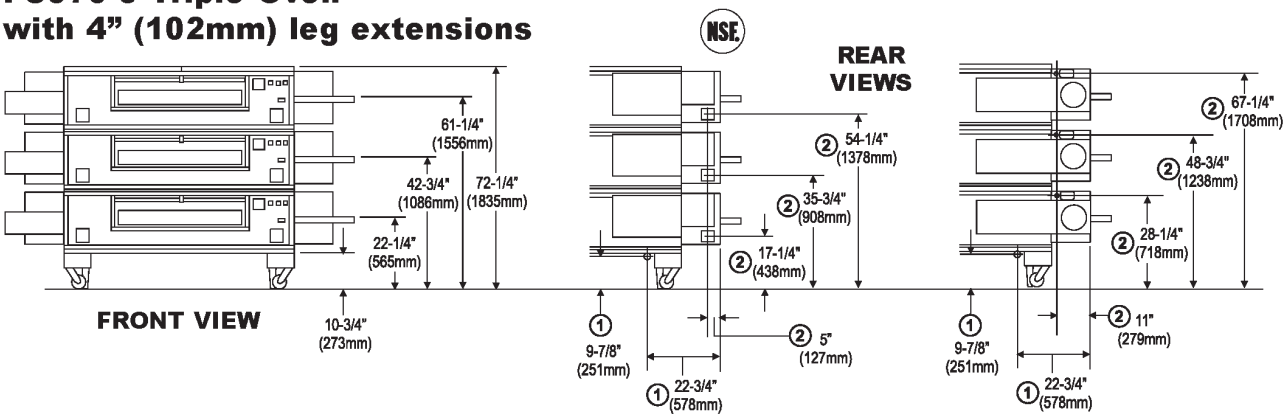

PS570-3 Triple Oven without leg extensions

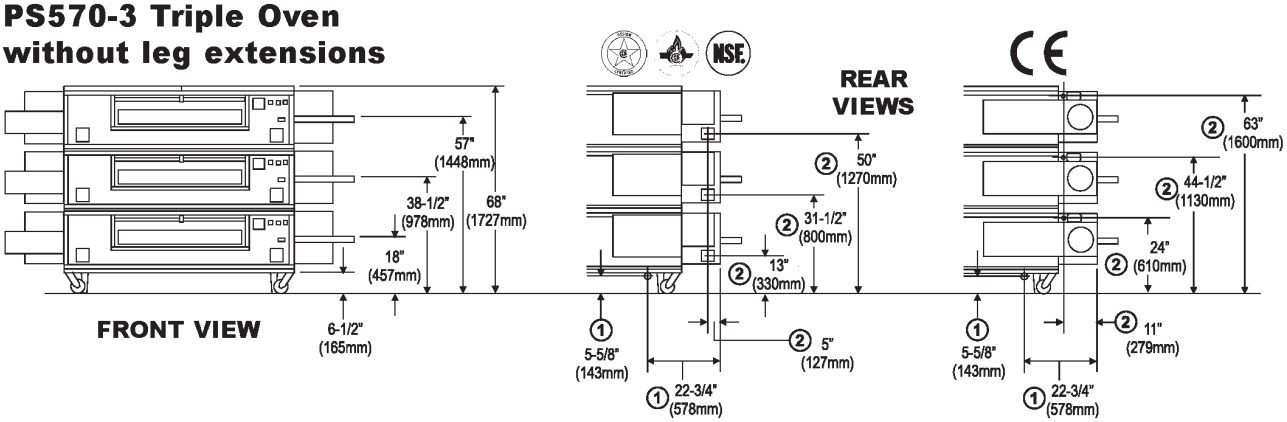

PS570-4 Quad Oven with outriggers

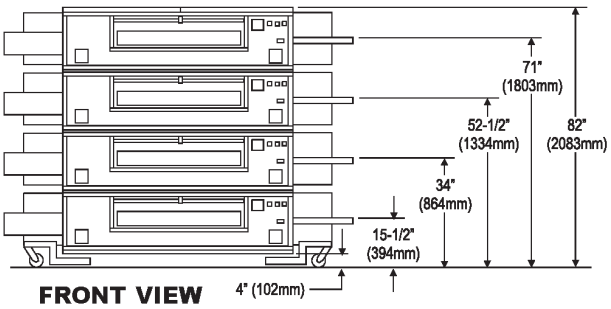

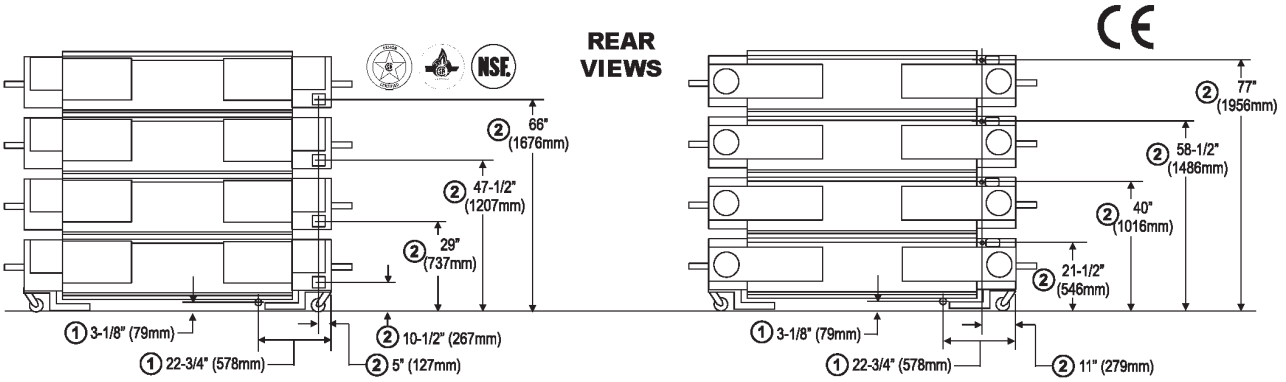

Middleby® Marshall
CONVEYORS OF EXCELLENCE

PS570 Series
Direct Gas Fired Conveyor Oven

RECOMMENDED MINIMUM CLEARANCES

Rear of oven to wall	Control end of oven to wall	Non-control end of oven to wall
0" (0mm)	0" (0mm)	0" (0mm)

GENERAL INFORMATION

Model	Heating Zone	Baking Area	Belt Length	Belt Width	Depth	Depth	Height	Max. Operating Temp.	Bake Time Range	Ship Wt.	Ship Cube
PS570-1 with 19" (483mm) leg extensions	70" 1778mm	15.5 sq. ft. 1.44m²	106" 2692mm	32" 813mm	61-3/4" 1568mm	63-3/8" 1610mm	48-1/4" 1226mm	550°F 288°C	4-29:50	1750 lbs. 795kg	160 ft.³ 4.5m³
PS570-2 with 10" (254mm) leg extensions	140" 3556mm	31 sq. ft. 2.88m²	106" 2692mm	32" 813mm	61-3/4" 1568mm	63-3/8" 1610mm	57-3/4" 1467mm	550°F 288°C	4-29:50	3500 lbs. 1589kg	320 ft.³ 9.0m³
PS570-2 with 15" (381mm) leg extensions	140" 3556mm	31 sq. ft. 2.88m²	106" 2692mm	32" 813mm	61-3/4" 1568mm	63-3/8" 1610mm	62-3/4" 1594mm	550°F 288°C	4-29:50	3500 lbs. 1589kg	320 ft.³ 9.0m³
PS570-3 with 4" (102mm) leg extensions	210" 5334mm	46.5 sq. ft. 4.32m²	106" 2692mm	32" 813mm	61-3/4" 1568mm	63-3/8" 1610mm	72-1/4" 1835mm	550°F 288°C	4-29:50	5250 lbs. 2384kg	480 ft.³ 13.5m³
PS570-3 without leg extensions	210" 5334mm	46.5 sq. ft. 4.32m²	106" 2692mm	32" 813mm	61-3/4" 1568mm	63-3/8" 1610mm	68" 1727mm	550°F 288°C	4-29:50	5250 lbs. 2384kg	480 ft.³ 13.5m³
PS570-4 with outriggers	280" 7112mm	62 sq. ft. 5.76m²	106" 2692mm	32" 813mm	61-3/4" 1568mm	63-3/8" 1610mm	82" 2083mm	550°F 288°C	4-29:50	7000 lbs. 3178kg	640 ft.³ 18.0m³

ELECTRICAL SPECIFICATIONS / Max Current Draw at Startup / Breakers

Model	Version	Voltage	Phase/Freq.	Supply	Amps	Breakers
PS570		208-240V	1/60 Hz	2 pole, 3 wire (2 hot, 1 gnd)	12A*	As per local codes
PS570		230V	1/50 Hz	2 pole, 3 wire (2 hot, 1 gnd)	10A*	As per local codes

* *The current draw ratings shown above are the max required at startup. The average current draw during operation is significantly lower.*

GAS SUPPLY SPECIFICATIONS

	Min. Gas Pipe Size	Supply Gas Pressure	Rated Heat Input
Natural Gas	2" (50.8mm) main One 1-1/4" (12.7mm) NPT branch to lower oven cavity with individual full-flow shutoff valve	6-12" W.C. (14.9-29.9 mbar)	170,000 BTU (42,840 kcal, 50 kW/hr.) per oven cavity
Propane Gas	2" (50.8mm) main One 1-1/4" (12.7mm) NPT branch to lower oven cavity with individual full-flow shutoff valve	11-14" W.C. (27.4-34.9 mbar)	170,000 BTU (42,840 kcal, 50 kW/hr.) per oven cavity

* *The gas supply pressures shown are for ovens installed in North America. The required gas supply pressures of other locations are dependent on the local gas type and on all applicable local codes.*

ALL SPECIFICATIONS SUBJECT TO CHANGE WITHOUT NOTICE.

Middleby® Marshall
CONVEYORS OF EXCELLENCE

THE MIDDLEBY CORPORATION
THE BRAND BEHIND THE BRANDS

1400 Toastmaster Drive, Elgin, IL 60120-9272, USA • (847) 741-3300 • Fax: (847) 741-0015
www.middleby.com

Printed in U.S.A 06/05 Form4501

KEY PARTS

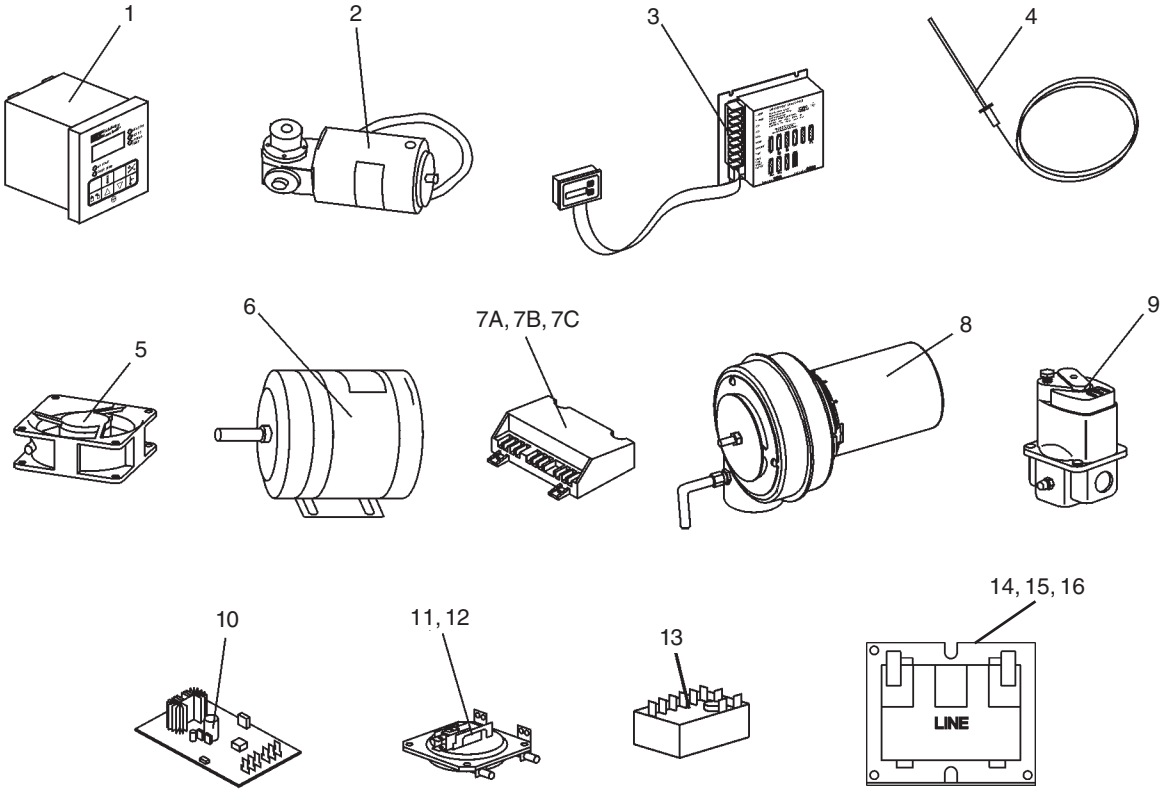

ITEM	PART NO.	DESCRIPTION	QUANTITY
1	47321	Kit, Digital Temperature Control (58504)	1
2	See Below 47796 51059	Motor, Drive 1400:1 (provided Standard) 600:1 (Hi-speed application)	1 or 2
3	58323	Kit, Conveyor Speed Controller with Digital Display	1 or 2
4	33984	Kit, Thermocouple (33812-1)	4
5	97525	Fan, Cooling	2
6	27381-0069	Motor, Blower, 1HP	2
7A	42810-0114	Ignition Module, US Version	1
7B	30872	Ignition Module, CE Version	1
7C	44676	Ignition Module, Australian Version	1
8	38811	Burner Blower/Motor Assembly	1
9	59450	Valve, Modulating Gas, 1/2″ (41647)	1
10	31651	Amplifier, Modulating Valve	1
11	50610	Air Switch, Rear Blower(s)	2
12	57141	Air Switch, Front, Burner/Blower	1
13	33983	Hi Limit Control Module	1
14	31504	Transformer, 240/120V Conveyor System	1
15	41872	Transformer, 240/24V, 25VA	1
16	32108	Transformer, 240/24V, 65VA	1

View of INSTALLATION KIT

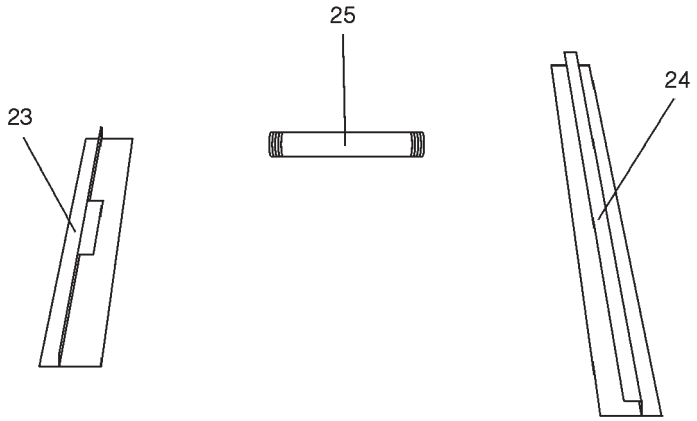

View of BASE PAD KIT

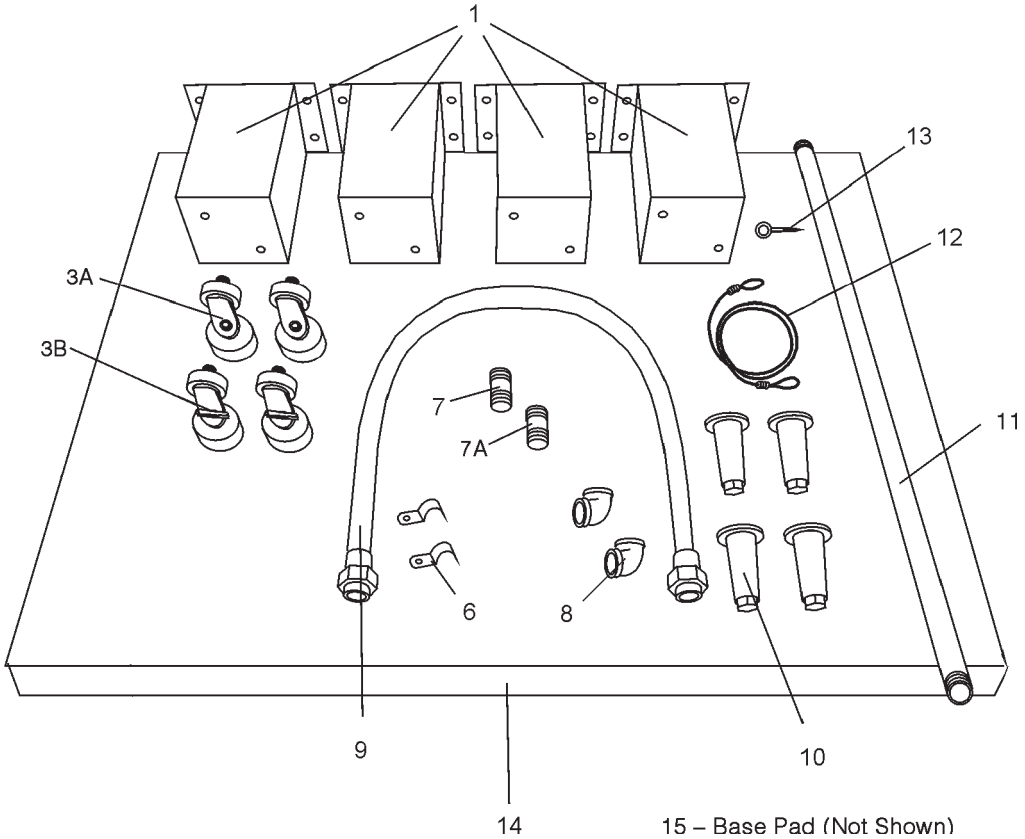

Parts for INSTALLATION KIT

ITEM	QTY.–SGL. BELT	P/N	DESCRIPTION
23	1	55028	CONVEYOR REAR STOP, 18″
24	1	55027	CONVEYOR END STOP, 29-1/4″
25	1	33120-0054	GAS PIPE NIPPLE, 1-1/4″ X 6″

Parts for BASE PAD KIT

ITEM	QTY. SGL. OVEN 19″ LEGS	QTY. SGL./DBL. OVEN/W 10″ LEGS	QTY. SGL./DBL. OVEN/W 15″ LEGS	QTY. TRIPLE OVEN	P/N	DESCRIPTION
1A	4	—	—	—	37210-0060	LEG, 19″ (483mm) (OPTIONAL)
1B	—	4	—	—	37210-0082	LEG, 10″ (254mm), No Longer Available
1C	—		4	—	37210-0057	LEG, 15″ (381mm)
1D	—	—	—	4	39684	LEG, 4″ (102mm) (43158, set of 4)
3A	2	2	2	2	37115-0102	CASTER, SWIVEL WITH 3/4″ STUD
3B	2	2	2	2	58930	CASTER, SWIVEL WITH BRAKE
6	2	2	2	2	27271-0004	PIPE CLAMP, 1-1/2″
7	2	2	2	2	33120-0055	NIPPLE, 1-1/4″ DIA. X 3″ L, NPT
7A	1	1	1	1	33120-0054	PIPE, 1-1/4″ DIA. X 6″ L
8	2	2	2	2	23122-0007	ELBOW, 90°, 1-1/4″ DIA.
9	1	1	1	1	22361-0003	GAS HOSE, 1-1/4″ DIA. x 72″ L
10	4	4	4	4	22450-0028	LEG, 6″ (152mm) ADJUATABLE WITH 3/4″ STUD
11	1	1	1	1	33120-0056	GAS PIPE, 1-1/4″ DIA. x 54″ L
12	1	1	1	1	22450-0253	RESTRAINT CABLE, 60″ (1524mm)
13	1	1	1	1	37699	EYE BOLT, BASE PAD
14	2	2	2	2	35210-0656	TOP COVER (RIGHT OR LEFT)
15	1	1	1	1	37210-0055	BASE PAD
NOT SHOWN:						
—	8	8	8	8	59156	SCREW, TEKS HD #10-32 x 1-1/4″
—	2	2	2	2	21292-0001	SCREW, TEKS HWH #2PT #10-16 x 3/4″
—	16	16	16	—	21216-0018	BOLT, HEX CAP 1/2″-13 x 1-1/4″
—	16	16	16	—	21416-0003	FLAT WASHER, 1/2″
—	16	16	16	—	21426-0004	LOCK WASHER, 1/2″
—	1	1	1	1	21392-0005	EYE BOLT, WALL

View of PANELS, END PLUGS, WINDOW and LEGS

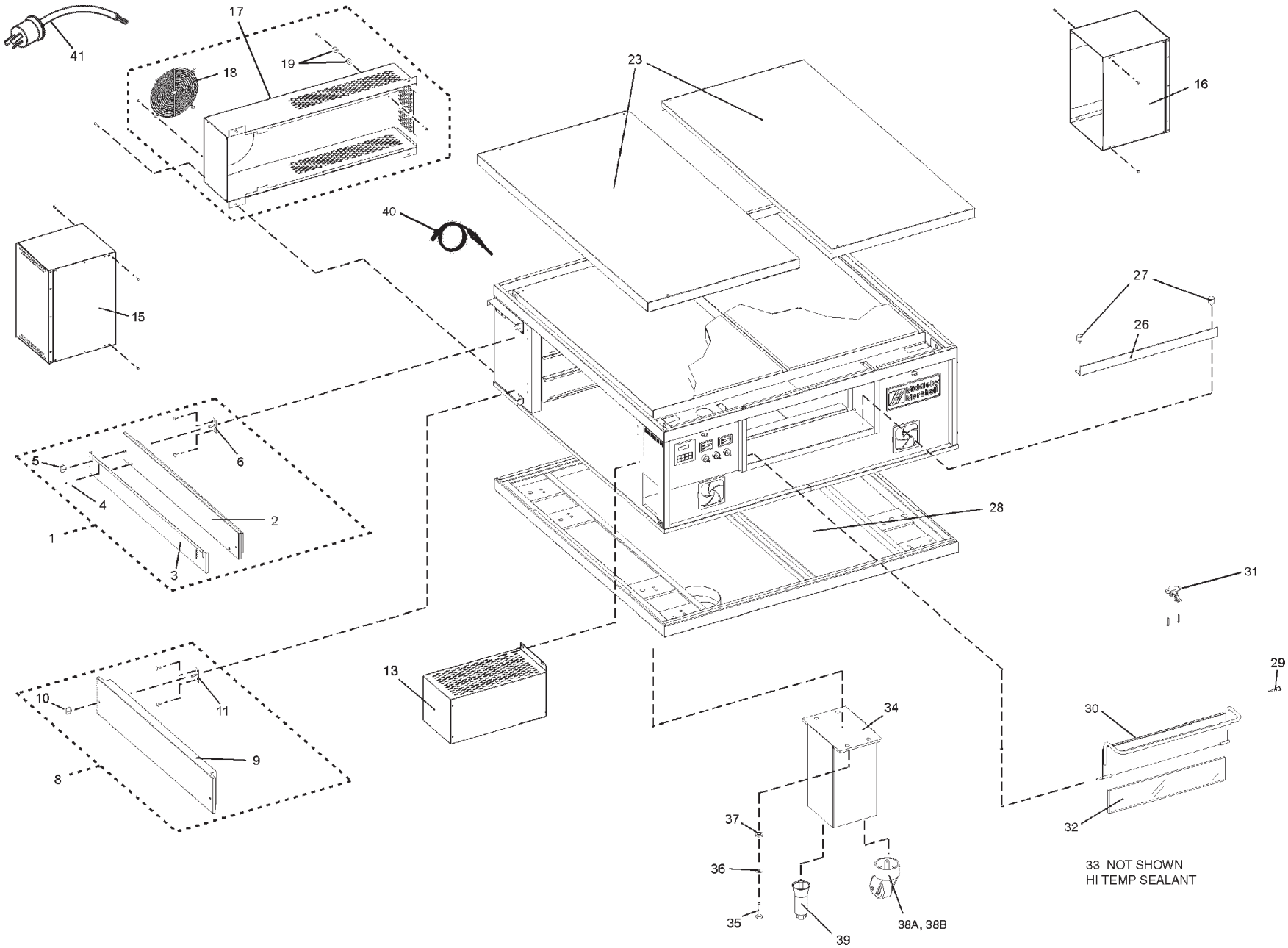

Parts for PANELS, END PLUGS, WINDOW and LEGS

ITEM	QTY.	P/N	DESCRIPTION
1	2	39539	ASSY, UPPER END PLUG *(INC. ITEMS 2-6)*
2	2	41778	WELDMENT, UPPER END PLUG PS500
3	1	50834	EYEBROW
4	8	220295	SCREW, “AB” HEX WSHR HD #10 X 3/4″
5	4	36452	WING NUT, 1/4″-20 W/PLASTIC GRIP
6	4	41708	PLATE, END PLUG MOUNTING
8	2	39569	ASSY, LOWER END PLUG *(INC. ITEMS 9-11)*
9	2	41779	WELDMENT, LOWER END PLUG PS500
10	4	36452	WING NUT, 1/4″-20 W/PLASTIC GRIP
11	4	41708	PLATE, END PLUG MOUNTING
13	1	44494	ASSEMBLY, DRIVE MOTOR SHROUD
15	1	44482	ASSEMBLY, LEFT MOTOR SHROUD
16	1	44483	ASSEMBLY, RIGHT MOTOR SHROUD
17	2	41679	ASSEMBLY, REAR SHROUD *(INC. ITEM 18 and 19)*
18	2	31765	GRILL, COOLING FAN
19	2	48522	BUMPER
23	2	35210-0656	TOP COVER

ITEM	QTY.	P/N	DESCRIPTION
26	1	41768	WINDOW GUARD
27	2	30927	BUMPER, WINDOW
28	1	37210-0055	BASE PAD
29	1	34121-0003	SCREW, THUMB
30	1	45457	WINDOW ASSEMBLY WITH HATCH
31	1	45087	LATCH *(INCLUDED IN ITEM 30)*
32	1	44514	GLASS, WINDOW, PRE-CUT *(INCLUDED IN ITEM 30)*, 3-1/2″ x 32″
33	*1*	*17130-0006*	*SEALANT*
34A	4	37210-0060	LEG, SINGLE OVEN, 19″ (483mm)
34B	4	37210-0057	LEG, DOUBLE OVEN, 15″ (381mm)
34C	4	37210-0082	LEG, DOUBLE OVEN, 10″ (254mm), *NO LONGER AVAILABLE*
34D	4	39684	LEG, 4″ (43158, SET OF 4)
35	16	21216-0018	BOLT, HEX CAP 1/2″-13 X 1-1/4″ - SINGLE & DOUBLE OVENS
36	16	21426-0004	LOCKWASHER, 1/2″ - SGL & DBL OVENS
37	16	21416-0003	FLAT WASHER, 1/2″ - SGL & DBL OVENS
38A	2	37115-0102	CASTER, SWIVEL WITH 3/4″STUD - SINGLE, DOUBLE, & TRIPLE OVENS
38B	2	58930	CASTER, SWIVEL WITH 3/4″STUD - SINGLE, DOUBLE, & TRIPLE OVENS WITH BRAKE
39	4	22450-0028	LEG, 6″ (152mm) ADJUSTABLE WITH 3/4″ STUD - SINGLE, DOUBLE, & TRIPLE OVENS
40	4	33984	KIT, THERMOCOUPLE, 6″ (33812-1)
41A	1	49975	CORD AND PLUG, L6-20P
41B	1	49976	CE CORD

View(s) of FRONT CONTROL AREA(s)

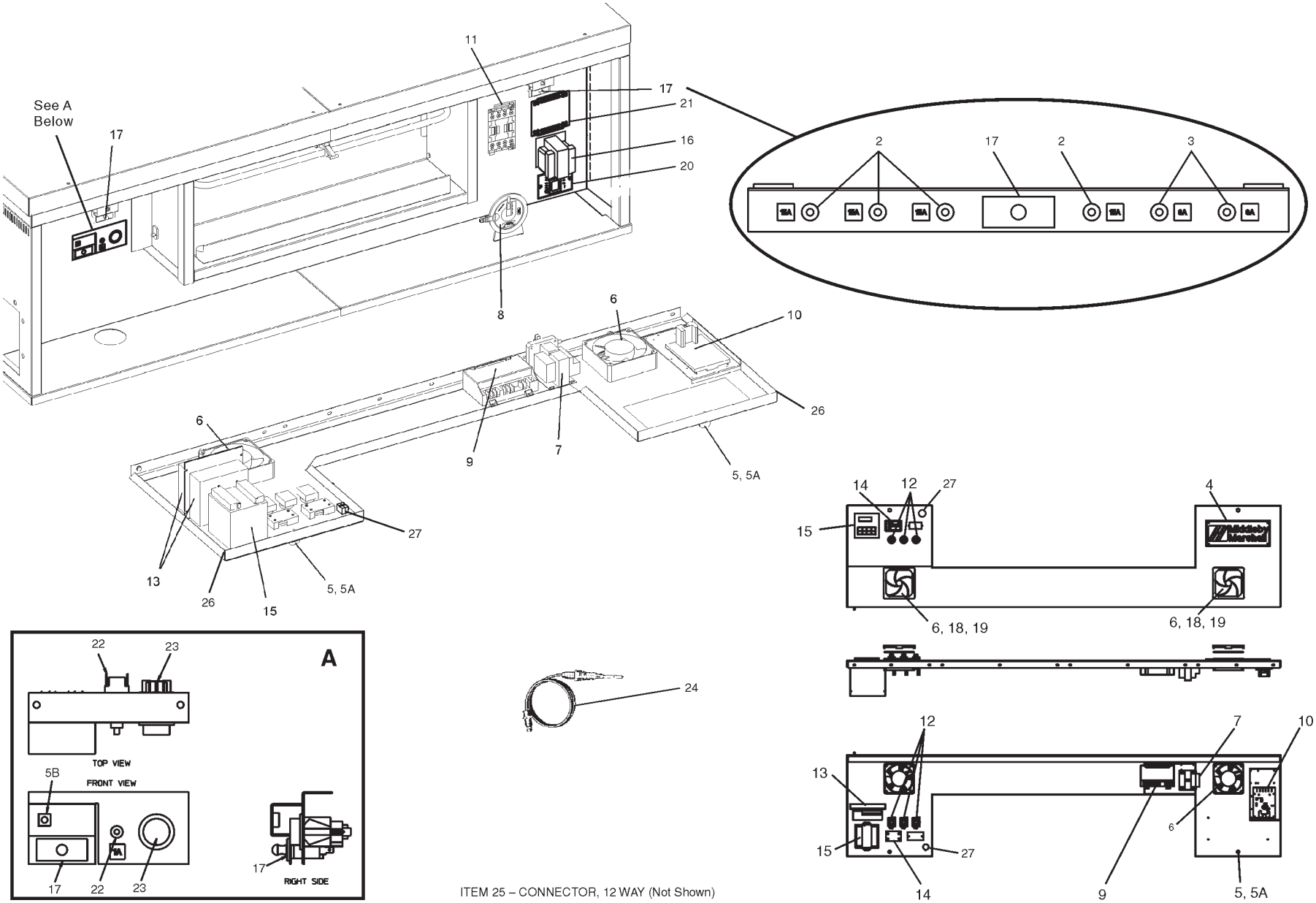

ITEM 25 – CONNECTOR, 12 WAY (Not Shown)

Parts for FRONT CONTROL AREA(s)

ITEM	QTY.	P/N	DESCRIPTION
2	4	45037	CIRCUIT BREAKER, 15 AMP
3	2	45036	CIRCUIT BREAKER, 3 AMP
4	1	22500-0021	NAMEPLATE, “MIDDLEBY MARSHALL”
5	2	A6153	BOLT
5A	2	21182-0005	KEEPER
5B	2	21182-0006	SELF RETAINING NUT
6	2	97525	COOLING FAN, BLOWS IN
7	1	32108	TRANSFORMER, 240Vp:24Vs, 65VA
8	1	57141	AIR SWITCH, BURNER/BLOWER MOTOR, FRONT
9A	1	42810-0114	IGNITION MODULE, US VERSION
9B	1	30872	IGNITION MODULE, CE VERSION
9C	1	44676	IGNITION MODULE, AUSTRALIAN VERSION
10	1	31651	SIGNAL AMPLIFIER, BOARD
11	1	28041-0011	CONTACTOR, BLOWER MOTORS
12	3	46521	KIT, SELECTOR SWITCH, CONTACT BLOCK
12A	3	44697	CONTACT BLOCK
12B	3	44696	SELECTOR SWITCH
13	1	58323	KIT, CONVEYOR SPEED CONTROLLER WITH SELECTOR AND DIGITAL DISPLAY (INC. ITEM 14)
14	1	37503	DIGITAL DISPLAY
15	1	47321	KIT, DIGITAL TEMPERATURE CONTROLLER (58504)

ITEM	QTY.	P/N	DESCRIPTION
16	1	31504	TRANSFORMER, 230Vp:120Vs, 0.2 KVA, CONVEYOR
17	2	28021-0047	SAFETY SWITCH, MACHINERY COMPARTMENT ACCESS PANEL, INTERLOCK
18	2	310-2458	GRILL, COOLING FAN, WITH FILTER
19	2	310-2468	FILTER ONLY
20	1	33983	HI-LIMIT CONTROL
21	1	41872	TRANSFORMER, 240/24V, SIGNAL AMPLIFIER, 25VA
22	1	45644	CIRCUIT BREAKER, 1 AMP
23	1	35145	RESET BUTTON WITH GREEN LIGHT
24	4	33894	KIT, THERMOCOUPLE, 6″ x 120″ (33812-1)
25	1	32001	CONNECTOR, 12 WAY *FOR P/N 30872 PACTROL IGNITION MODULE (CE ONLY)*
26	2	45020	CATCH, DOOR *(CE ONLY)*
CE ONLY			
27	1	28201-0016	LIGHTED RESTART SWITCH
27A	1	27073-0007	BULB, 220V
27B	1	30204	PUSH BUTTON
27C	1	30205	ADAPTER
27D	1	30206	CONTACT BLOCK
27E	1	30207	SOCKET FOR BULB

View of GAS PIPING AND BURNER ASSEMBLY

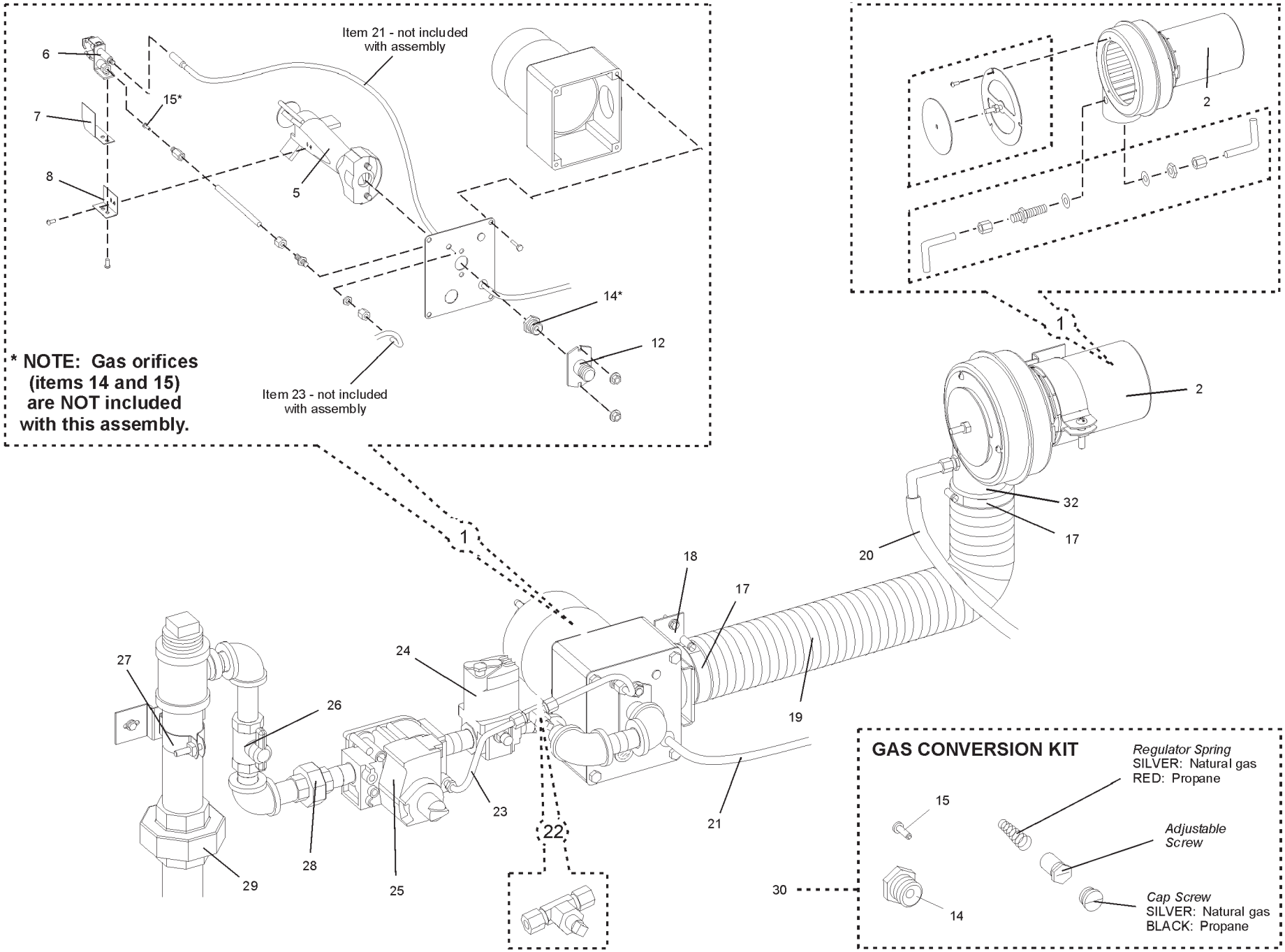

Parts for GAS PIPING AND BURNER ASSEMBLY

ITEM	QTY.	P/N	DESCRIPTION
1	1	38126	ASSEMBLY, BURNER *(INCLUDES ITEMS 1-12)*
2	1	38811	ASSEMBLY, BURNER BLOWER AND MOTOR *(INCLUDES ITEMS* 2-4)
5	1	38127	VENTURI
6	1	27363-0002	PILOT IGNITOR WITH NATURAL GAS ORIFICE
7	1	27170-0204	PILOT SHIELD
8	1	27170-0264	BRACKET, PILOT MOUNTING
12	1	38279	ORIFICE HOLDER/INLET CONNECTOR
14A	1	22176-0014	MAIN ORIFICE, NATURAL GAS, 0.250″ (6.35mm)
14B	1	22176-0015	MAIN ORIFICE, PROPANE, 0.152″ (3.86mm)
15A			*USE ITEM 6 FOR NATURAL GAS*
15B	1	22174-0010	PILOT ORIFICE, PROPANE, 0.018″ (0.46mm)
17	2	22450-0259	HOSE CLAMP
18	1	37210-0026	BRACKET, HOSE AND BURNER MOUNTING
19	1	22450-0255	AIR DUCT, FLEXIBLE
20	A/R	22450-0297	TUBING, SILICONE RUBBER, 1/4″/6.4mm DIA.
21	1	27159-0019	IGNITION/SENSOR WIRE

ITEM	QTY.	P/N	DESCRIPTION
22	1	30185	KIT, PILOT TEE 1/4″/6.4mm
23	A/R	15125-0002	TUBING, ALUMINUM, 1/4″/6.4mm O.D.
24	1	59450	VALVE, MODULATING GAS, 1/2″ (41647)
25A	1	45688	COMBINATION GAS VALVE (SAFETY REGULATOR), 1/2″, NATURAL GAS
25B	1	43085	COMBINATION GAS VALVE & GAS PRESSURE SWITCH *(CE ONLY)*, NATURAL GAS
25C	1	28092-0018	KIT, COMBINATION VALVE, CONVERT NATURAL GAS TO LP, *(INCLUDES CAP SCREW, O-RING, ADJUSTING SCREW AND LP SPRING)*
26	1	23115-0009	VALVE, SHUTOFF 1/2″
27	1	42410-0016	BRACKET, PIPE MOUNTING 1-1/4″
28	1	23051-0003	UNION, PIPE 1/2″
29	1	23051-0012	UNION, PIPE 1-1/4″
30B	1	42810-0124	KIT, CONVERSION FROM NATURAL GAS TO PROPANE (INCLUDES ITEMS 14B, 15B AND 25C)
32	1	35210-0053	TUBE BLOWER EXTENSION (NOT SHOWN)

View(s) of REAR BLOWER/MOTOR ASSEMBLY (CONVEYOR DRIVE END SHOWN)

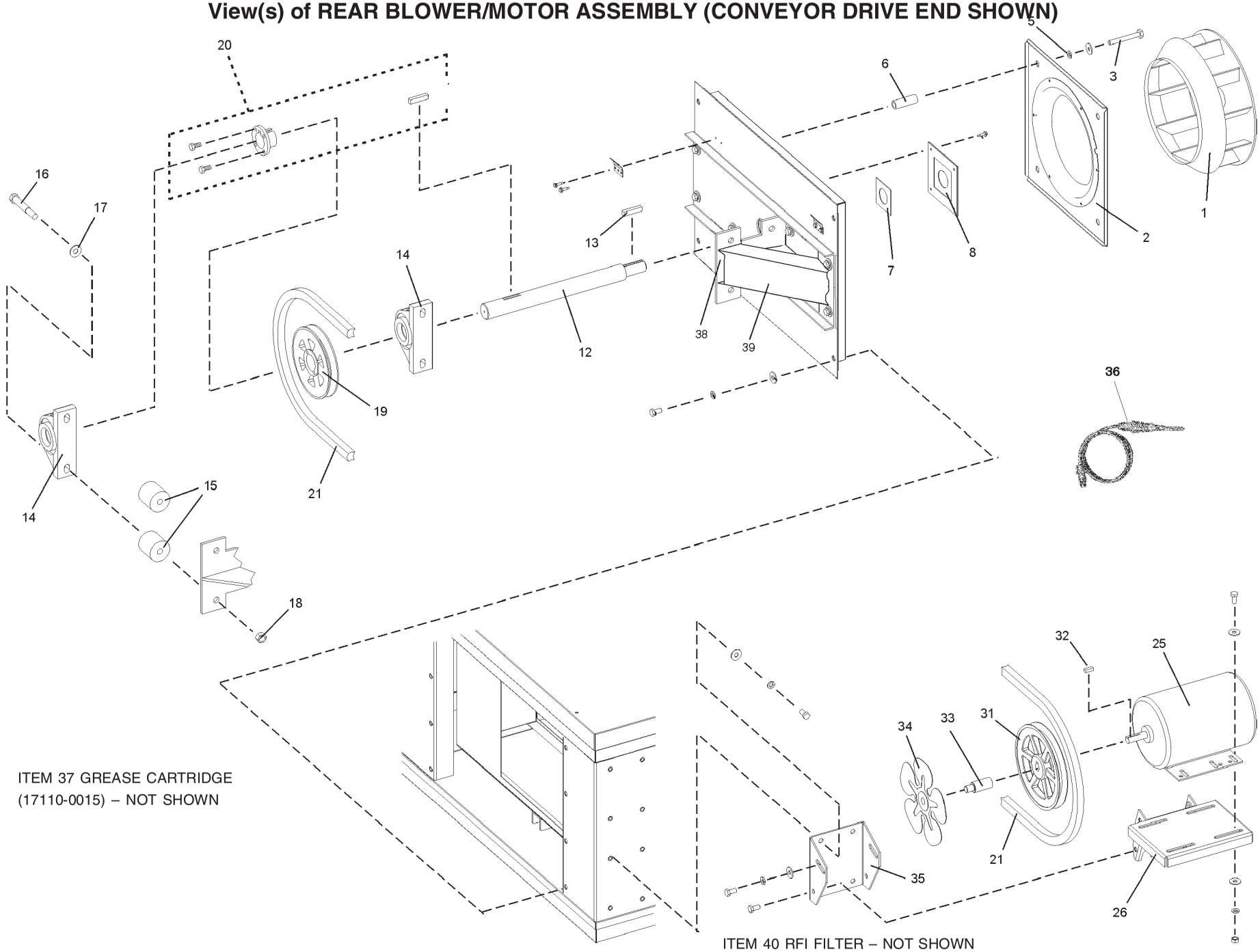

ITEM 37 GREASE CARTRIDGE
(17110-0015) – NOT SHOWN

ITEM 40 RFI FILTER – NOT SHOWN

Parts for EACH REAR BLOWER/MOTOR ASSEMBLY

ITEM	QTY.	P/N	DESCRIPTION
1A	1	22521-0005	BLOWER WHEEL-CCW – DRIVE END
1B	1	22521-0006	BLOWER WHEEL-CW, IDLER END
2	1	37210-0124	PLATE, INLET RING
3	4	21211-0001	SCREW, CAP HEX HD 3/8″-16 x 3″
5	10	21422-0001	LOCKWASHER, SPLIT 3/8″
6	4	35210-0576	SPACER
7	1	35210-0541	SHAFT SEAL, TEFLON
8	1	37210-0101	PLATE, SHAFT SEAL INNER
12	1	41899	SHAFT BLOWER
13	1	35210-0286	KEY, BLOWER WHEEL
14	2	57321	BEARING (22072-0017)
15	4	39411	SPACER, BEARING
16	4	2000535	SCREW, CAP HEX HD
17	4	A6235	FLATWASHER, 7/16″
17A	4	21422-0016	LOCKWASHER
18	4	21121-0013	HEX NUT, 1/2″-13
19	1	39587	PULLEY, BLOWER, STANDARD, 6-1/2″
20	1	22031-0018	BUSHING, 2-1/2″ DIAMETER

ITEM	QTY.	P/N	DESCRIPTION
21	1	46452	BELT, STANDARD *(SEE BELOW)*
25	1	27381-0069	MOTOR, BLOWER 1HP
26	1	41666	BRACKET, MOTOR MOUNTING
31	1	47267	PULLEY, (BK65) STANDARD, MOTOR *(SEE BELOW)*
32	1	220026	KEY, PULLEY, 3/16″ x 3/16″ x 3/4″ (5 x 5 x 19mm), MOTOR
33	1	43024	EXTENDER, FAN
34A	1	27399-0008	FAN BLADE, CW, IDLER END
34B	1	27399-0009	FAN BLADE, CCW, CONVEYOR, DRIVE END
35	1	41667	BRACKET, MOTOR SUPPORT
36	4	33984	KIT, THERMOCOUPLE, 6″ *(SOME MODELS HAVE A QTY OF 4)* (33812-1)
37	A/R	17110-0015	GREASE CARTRIDGE (FOR 22072-0017 BEARING)
38	1	41575	MOUNTING BRACKET
39	1	44550	SUPPORT BRACKET
40	1	33813	RFI FILTER *(CE & AUSTRALIAN ONLY)*

RPM KIT P/N	HERTZ	MOTOR PULLEY W/SPLIT BUSHING	MTR PULLEY P/N SPLIT BUSH P/N	DIAMETER	BELT SIZE DESCRIPTION	BELT P/N	RPM OF FAN
47214 No Longer in Production	60	BK70	44977	6-3/4″	BX67	46452	1780
47215	60	BK80	39586	7-3/4″	BX68	46453	2057
47215	50	BK80	39586	7-3/4″	BX68	46453	1733
47216 Hi-Altitude	60	BK90H W/BUSHING	46455 50222	8-3/4″	BX70	46454	2300
47216 Hi-Altitude	50	BK90H W/BUSHING	46455 50222	8-3/4″	BX70	46454	1917
47268 Standard	60	BK65	47267	6-1/4″	BX67	46452	1692

View of REAR CAPACITOR AREA

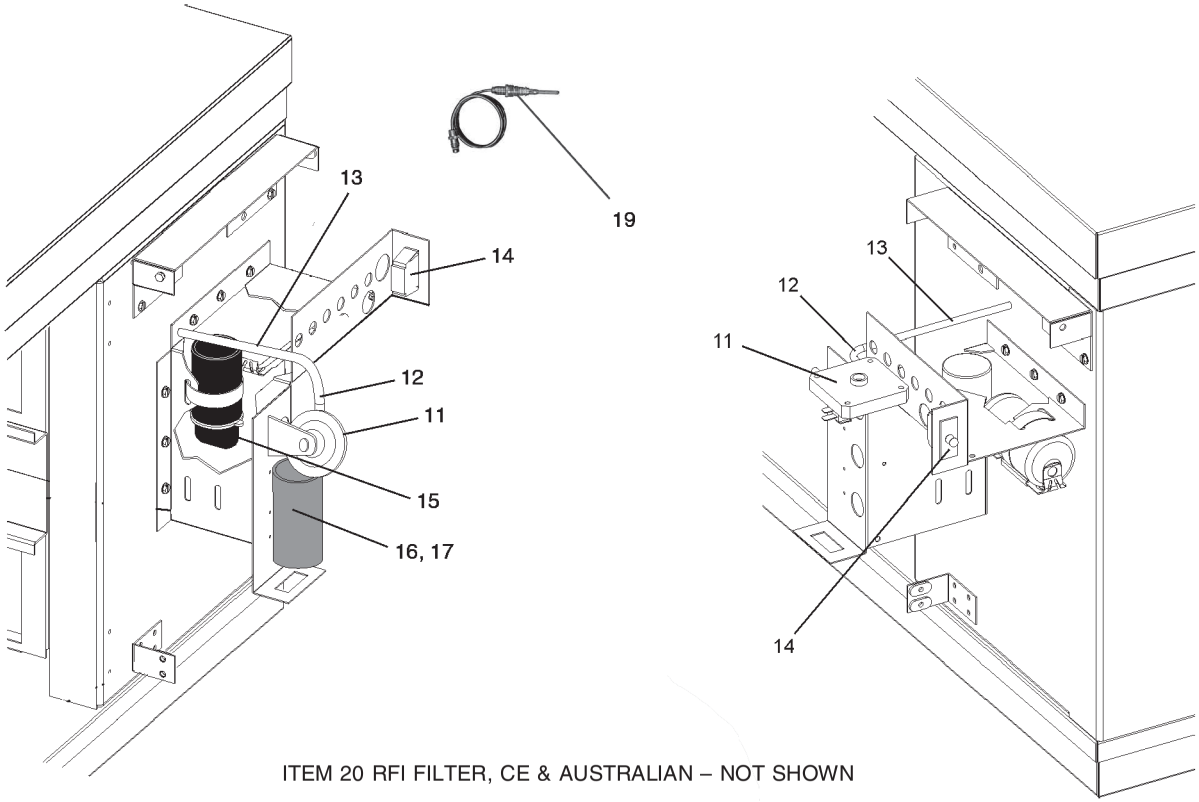

ITEM 20 RFI FILTER, CE & AUSTRALIAN – NOT SHOWN

Parts for REAR CAPACITOR AREA

ITEM	QTY.	P/N	DESCRIPTION
11	2	50610	AIR SWITCH
12	A/R	22450-0297	TUBING, SILICONE BULK 1/4"/6.4mm O.D.
13	2	15125-0002	TUBING, ALUMINUM BULK 1/4″/6.4mm O.D.
14	2	28021-0061	SAFETY SWITCH, BLOWER MOTOR SHROUD, MOMENTARY
15	2	27170-0269	ASSEMBLY START CAPACITOR (BLACK)
15A	1	44469	BRACKET & END CAP, START CAPACITOR
16	2	27170-0270	CAPACITOR, RUN (SILVER)
17	2	44465	INSULATOR CAP, RUN CAPACITOR
18	4	22450-0259	HOSE CLAMP
19	3	33984	KIT, THERMOCOUPLE, 6″ x 120″ (33812-1) *(SOME MODELS HAVE A QTY OF 4)*
20	1	33813	RFI FILTER *(CE & AUSTRALIAN ONLY)*

View of “SINGLE” BELT CONVEYOR

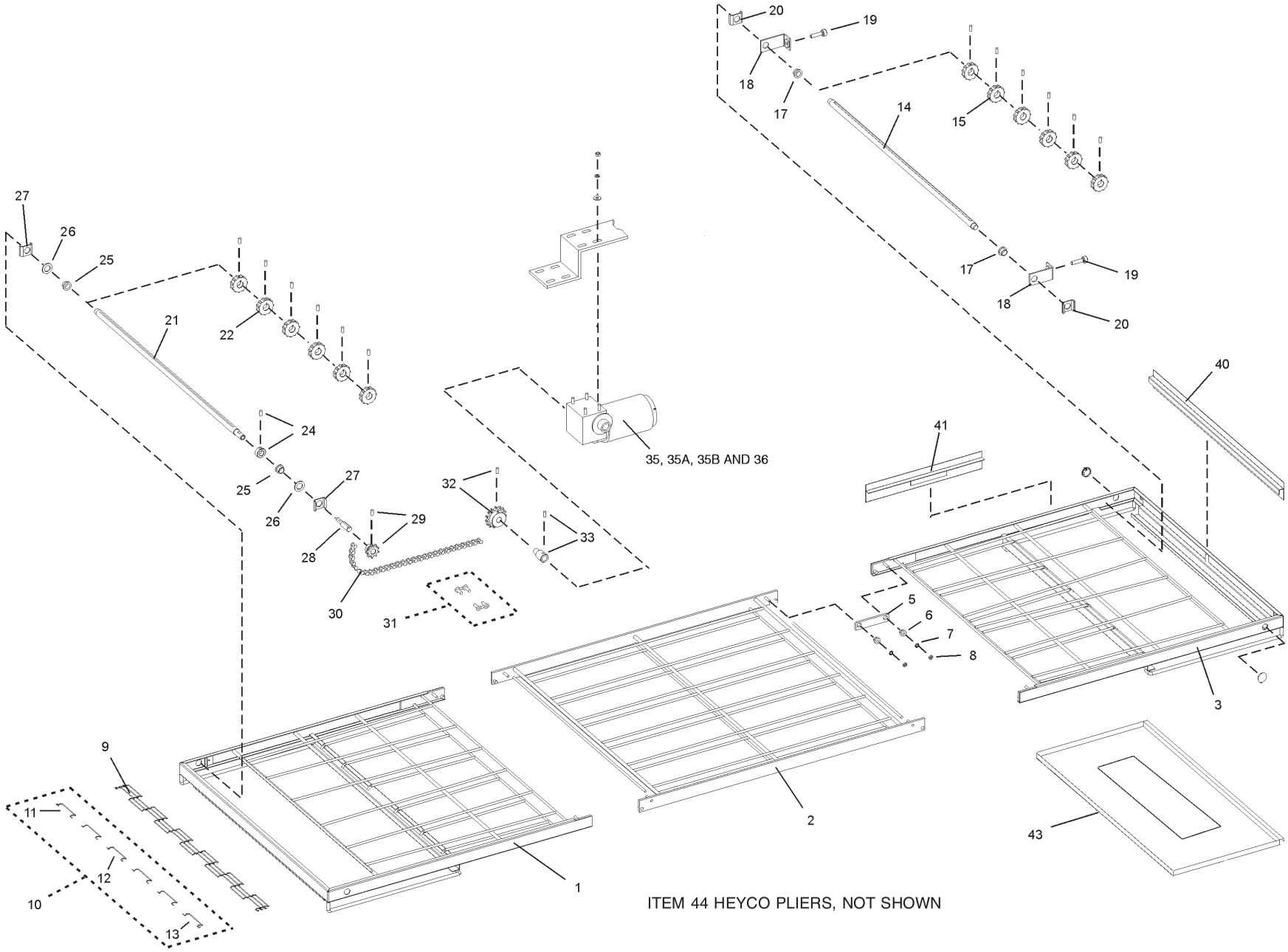

ITEM 44 HEYCO PLIERS, NOT SHOWN

Parts for "SINGLE" BELT CONVEYOR

ITEM	OTY	PART NO.	DESCRIPTION
1	1	37210-0117	WELDMENT, CONVEYOR DRIVE FRAME
2	4	37210-0046	WELDMENT, CONVEYOR CENTER FRAME
3	1	37210-0116	WELDMENT, CONVEYOR IDLER FRAME
5	4	35210-0429	PIVOT PLATE
6	8	35210-0491	BUSHING, CONVEYOR ADJUSTMENT
7	8	F716A8805	WASHER, EXTERNAL TOOTH 1/4"
8	8	21176-0001	LOCKNUT, HEX 1/4"-20
9A	1	22450-0265	CONVEYOR BELT, COMPLETE, 32"W x 206"L (0.81 x 5.23m)
9B	--	33900-0032	CONVEYOR BELT, 32"W x 12"L (0.81 x 0.30m)
10	1	42400-0089	MASTERLINKS KIT, 32" (0.81m) BELT *(INC.ITEMS 11-13)*
11	1	--	MASTERLINK, LEFT
12	4	--	MASTERLINK, CENTER
13	1	--	MASTERLINK, RIGHT
14	1	35000-1011	SHAFT, IDLER
15	6	22229-0003	SPROCKET, CONVEYOR BELT
17	2	22034-0003	BUSHING, BRONZE 3/4" O.D. x 5/8" 1.D.
18	2	37000-0413	BRACKET, IDLER SHAFT ADJUSTMENT
19	2	35000-1008	SCREW, CONVEYOR TENSION ADJUSTMENT
20	2	54947	BRACKET, SHAFT SUPPORT
21	1	35000-1012	SHAFT, DRIVE
22	6	22229-0003	SPROCKET, CONVEYOR BELT
24	1	22011-0013	COLLAR, SHAFT, WITH SET SCREW

ITEM	OTY	PART NO.	DESCRIPTION
25	2	22034-0003	BUSHING, BRONZE 3/4" O.D. x 5/8" 1.D.
26	2	35000-1080	SPACER, NYLON 1-1/4" O.D. x 3/4" I.D.
27	2	54947	BRACKET, SHAFT SUPPORT
28	1	35000-1013	ADAPTER, DRIVE SHAFT
29	1	22152-0017	SPROCKET, DRIVE SHAFT, 5/8" BORE, 9T, WITH SET SCREW
30	1	42400-0164	ASSEMBLY, ROLLER CHAIN (62 LINKS) WITH MASTERLINK (STANDARD SPEED)
31	1	22273-0001	MASTERLINK, ROLLER CHAIN
32A	1	22152-0018	SPROCKET, DRIVE MOTOR, 5/8" BORE, 15T, WITH SET SCREW (STANDARD SPEED)
32B	1	57319	SPROCKET, DRIVE MOTOR, 5/8″, BORE, 20T (HIGH SPEED)
33	1	35210-0640	ADAPTER, DRIVE MOTOR WITH SET SCREW
35	1	47796	DRIVE MOTOR, 1/8 HP, 1400:1 (STANDARD)
35A		51059	DRIVE MOTOR, 1/8 HP, 600:1 (HIGH SPEED)
35B	1	SEE BELOW	BRUSHES, DRIVE MOTOR,
36	1	SEE BELOW	ASSEMBLY, PICKUP, DRIVE MOTOR
40	1	55027	END STOP, CONVEYOR, 29-1/4″ LONG
41	1	55028	REAR STOP, CONVEYOR, 18″ LONG
43	2	30004	CRUMB PAN, ALUMINIZED *(WITH OPENINGS)*
44	*1*	*50795*	*TOOL, HEYCO PLIERS*

CONVEYOR DRIVE MOTOR	MOTOR RATIO	ITEM 35B BRUSHES	ITEM 36 PICKUP SENSOR
CURRENT 47796	1400:1	45017	50265
46444	1400:1	46658	46451
46603	1400:1	46658	46451
27384-0008	1400:1	22450-0052	46451
CURRENT 51059	600:1	45017	50265
46446	600:1	46658	46451
46605	600:1	46658	46451
27384-0003	600:1	22450-0052	46451

View of “50-50” Split Belt Conveyor

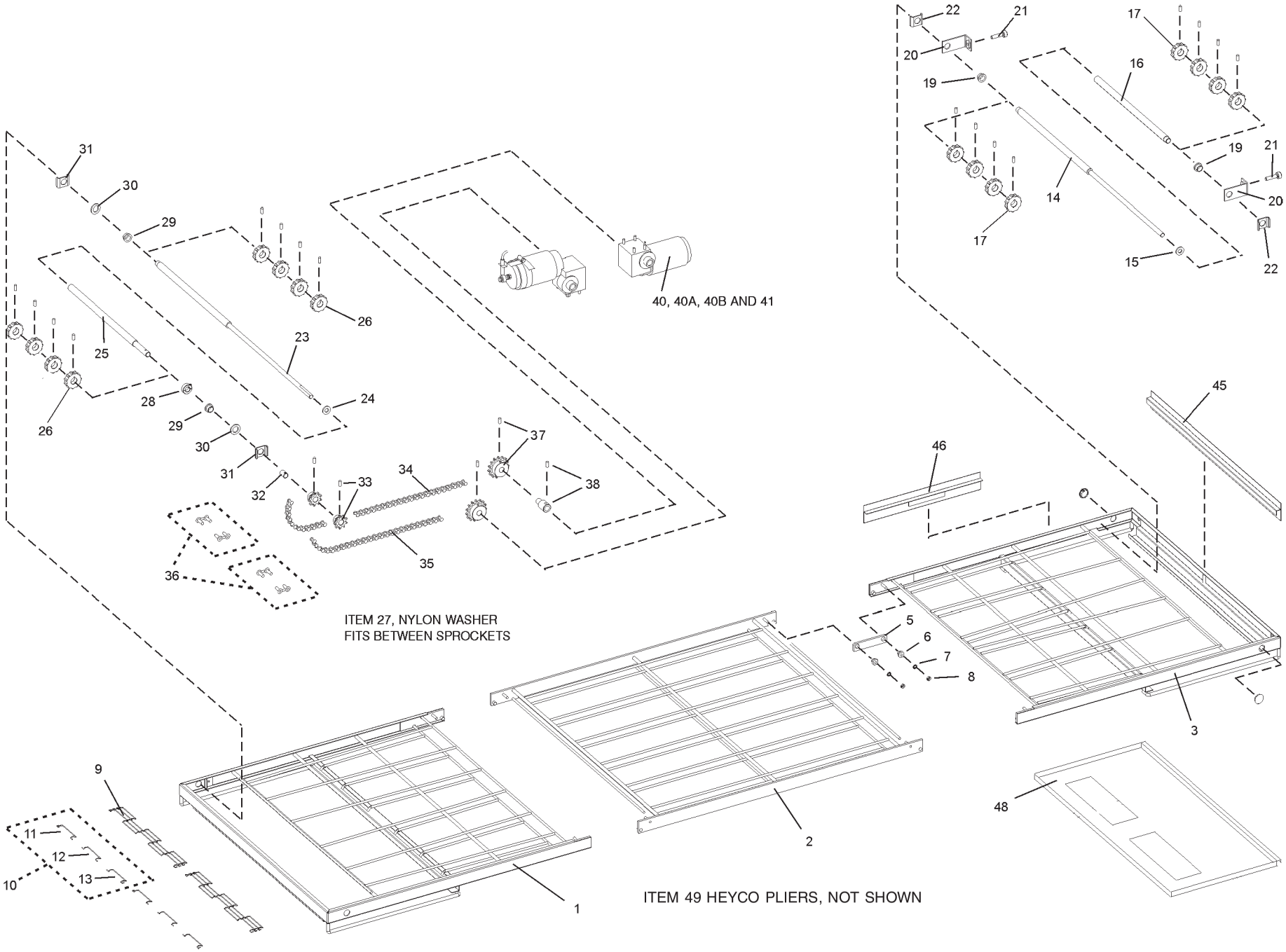

Parts for “50-50” Split Belt Conveyor

ITEM	QTY	PART NO.	DESCRIPTION
1	1	37210-0117	WELDMENT, CONVEYOR DRIVE FRAME
2	1	37210-0046	WELDMENT, CONVEYOR CENTER FRAME
3	1	37210-0116	WELDMENT, CONVEYOR IDLER FRAME
5	4	35210-0429	PIVOT PLATE
6	8	35210-0491	BUSHING, CONVEYOR ADJUSTMENT
7	8	F716A8805	WASHER, EXTERNAL TOOTH 1/4"
8	8	21176-0001	LOCKNUT, HEX 1/4"-20
9A	2	22450-0271	CONVEYOR BELT, COMPLETE, 15"W x 206"L (0.38 x 5.23m)
9B	--	33900-0037	CONVEYOR BELT, 15"W x 12"L (0.38 x 0.30m)
10	2	51382	MASTERLINKS KIT, 15" (0.81m) BELT *(INC. ITEMS 11-13)*
11	2	--	MASTERLINK, LEFT
12	2	--	MASTERLINK, CENTER
13	2	--	MASTERLINK, RIGHT
14	1	42400-0354	SHAFT, IDLER, REAR, 32-3/4″
15	1	21415-0001	FLAT WASHER, BRONZE, 1″ O.D. X 1/2″ I.D.
16	1	35000-1535	SHAFT, IDLER, FRONT, 16-3/8″
17	8	22229-0003	SPROCKET, CONVEYOR BELT
19	2	22034-0003	BUSHING, BRONZE 3/4" O.D. x 5/8" I.D.
20	2	37000-0413	BRACKET, IDLER SHAFT ADJUSTMENT
21	2	35000-1008	SCREW, CONVEYOR TENSION ADJUSTMENT
22	2	54947	BRACKET, SHAFT SUPPORT
23	1	42400-0355	SHAFT, DRIVE, REAR, 35-1/3″
24	1	21415-0001	FLAT WASHER, BRONZE, 1″ O.D. X 1/2″ I.D.
25	1	35000-1536	SHAFT, DRIVE, FRONT, 17-3/4″
26	8	22229-0003	SPROCKET, CONVEYOR BELT
27	1	35000-1531	SPACER, NYLON FITS BETWEEN SPROCKETS
28	1	22011-0014	COLLAR, SPLIT LOCKING
29	2	22034-0003	BUSHING, BRONZE 3/4" O.D. x 5/8" I.D.
30	2	35000-1080	SPACER, NYLON 1-1/4" O.D. x 3/4" I.D.

ITEM	QTY	PART NO.	DESCRIPTION
31	2	54947	BRACKET, SHAFT SUPPORT
32	1	35900-0023	BUSHING, SPLIT BELT DRIVE SPROCKET
33	2	22152-0017	SPROCKET, DRIVE SHAFT, 5/8" BORE, 9T, WITH SET SCREW
34	1	42400-0164	ASSEMBLY, ROLLER CHAIN COMPLETE (62 LINKS) (STANDARD SPEED)
35	1	42410-0128	ASSEMBLY, ROLLER CHAIN COMPLETE (48 LINKS) (STANDARD SPEED)
36	2	22273-0001	MASTERLINK, ROLLER CHAIN
37A	2	22152-0018	SPROCKET, DRIVE MOTOR, 5/8" BORE, 15T, WITH SET SCREW
37B	2	57319	SPROCKET, DRIVE MOTOR, 5/8″, BORE, 20T (HIGH SPEED)
38	1	35210-0640	ADAPTER, DRIVE MOTOR WITH SET SCREW
40	2	47796	DRIVE MOTOR, 1/8 HP, 1400:1 (STANDARD)
40A	2	51059	DRIVE MOTOR, 1/8 HP, 600:1 (HIGH SPEED)
40B	2	SEE BELOW	BRUSHES, DRIVE MOTOR,
41	2	SEE BELOW	ASSEMBLY, PICKUP, DRIVE MOTOR
45	1	55027	END STOP, CONVEYOR, 29-1/4″ LONG
46	1	55028	REAR STOP, CONVEYOR, 18″ LONG
48A	2	30004	CRUMB PAN, ALUMINIZED *(WITH OPENINGS)*
49	1	50795	TOOL, HEYCO PLIERS

CONVEYOR DRIVE MOTOR	MOTOR RATIO	ITEM 40B BRUSHES	ITEM 41 PICKUP SENSOR
CURRENT 47796	1400:1	45017	50265
46444	1400:1	46658	46451
46603	1400:1	46658	46451
27384-0008	1400:1	22450-0052	46451
CURRENT 51059	600:1	45017	50265
46446	600:1	46658	46451
46605	600:1	46658	46451
27384-0003	600:1	22450-0052	46451

D	A	A	C	X	C	A	A	D			

→

B	E	B	E	B	X	B	E	B	E	B	

Notes

RT TO LT MIRROR IMAGE OF FINGER ARRANGEMENT
MOTOR PULLEY: BK65 P/N 47267
BELT SIZE: BX67 P/N 46452
RPM= 1692

A = 39224 WLDMT, PLT OTR SL3 W/RASD MANF
37000-0577 WLDMT, PLATE, INNER COL W/DAM
42410-0202 ASSY, RAISED MANF W/SLD BAFFEL

B = 37900-0051 PLATE, OUTER S/L6
37000-0577 WLDMT, PLATE, INNER COL W/DAM
42410-0194 ASSY, MANIFOLD W/FULL BAFFEL ALUZ

C = 35210-0536 PLATE, FULL BLANK ALUZ

D = 35210-0535 PLATE, BLANK PRTL 2.75 UPR 570

E = 35210-0590 PLATE, BLANK PARTIAL ALUZ LWR570

F =

G =

Description	
CONFIG, FINGER PS570S STD	
P/N	**Rev.**
31257	K

Middleby® Marshall
CONVEYORS OF EXCELLENCE

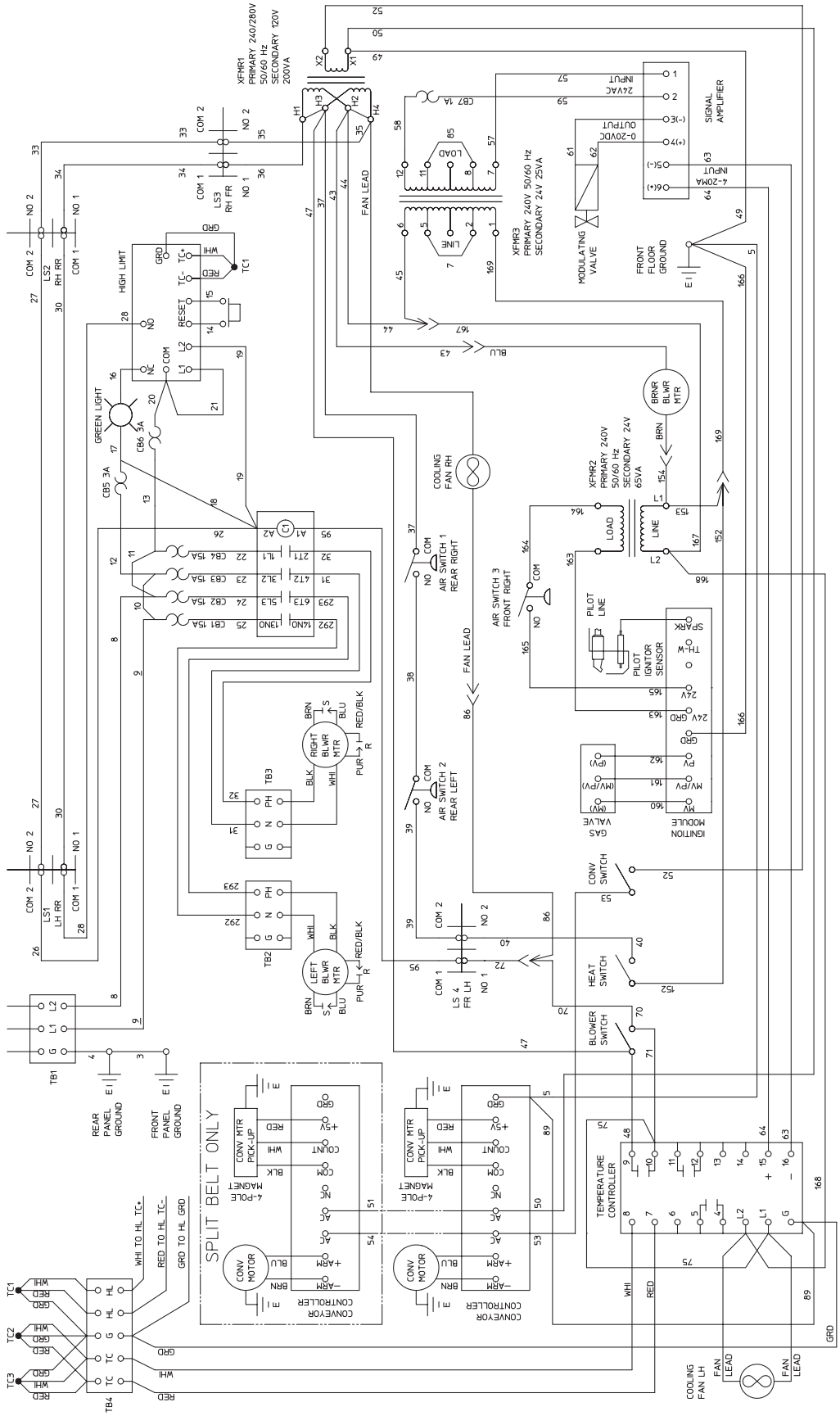

MIDDLEBY MARSHALL PS570G WIRING DIAGRAM G208-240 volt 50/60 Hz, 1 Phase

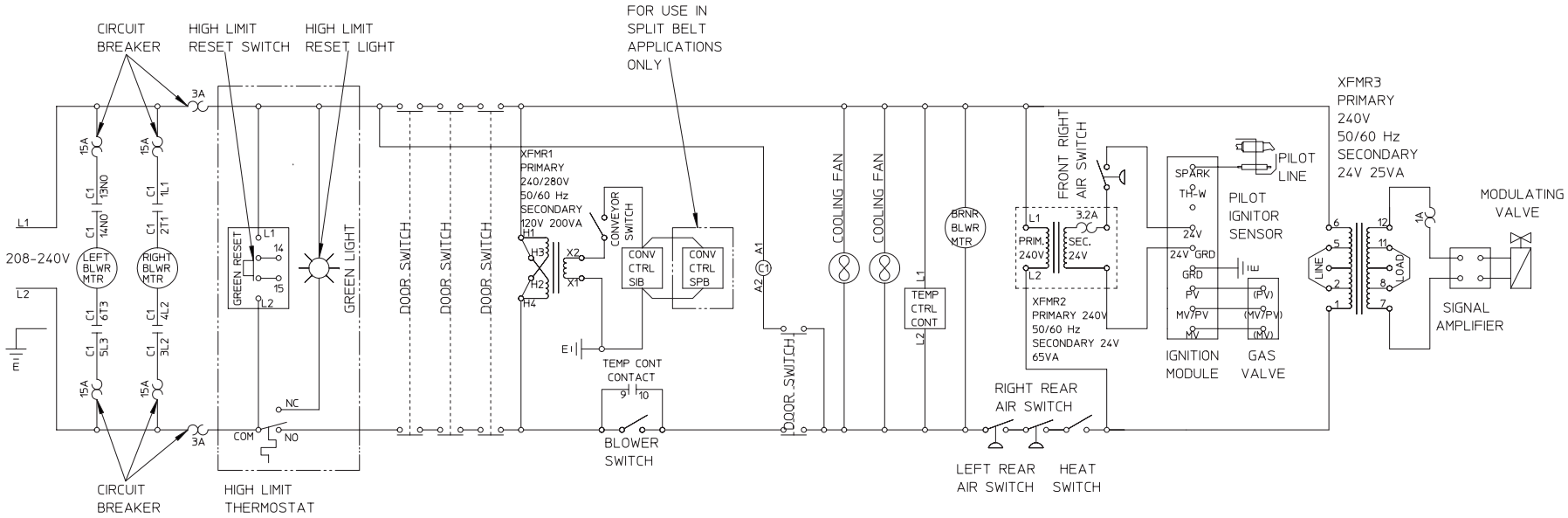

MIDDLEBY MARSHALL PS570G LADDER DIAGRAM G208-240 volt 50/60 Hz, 1 Phase

45520E1

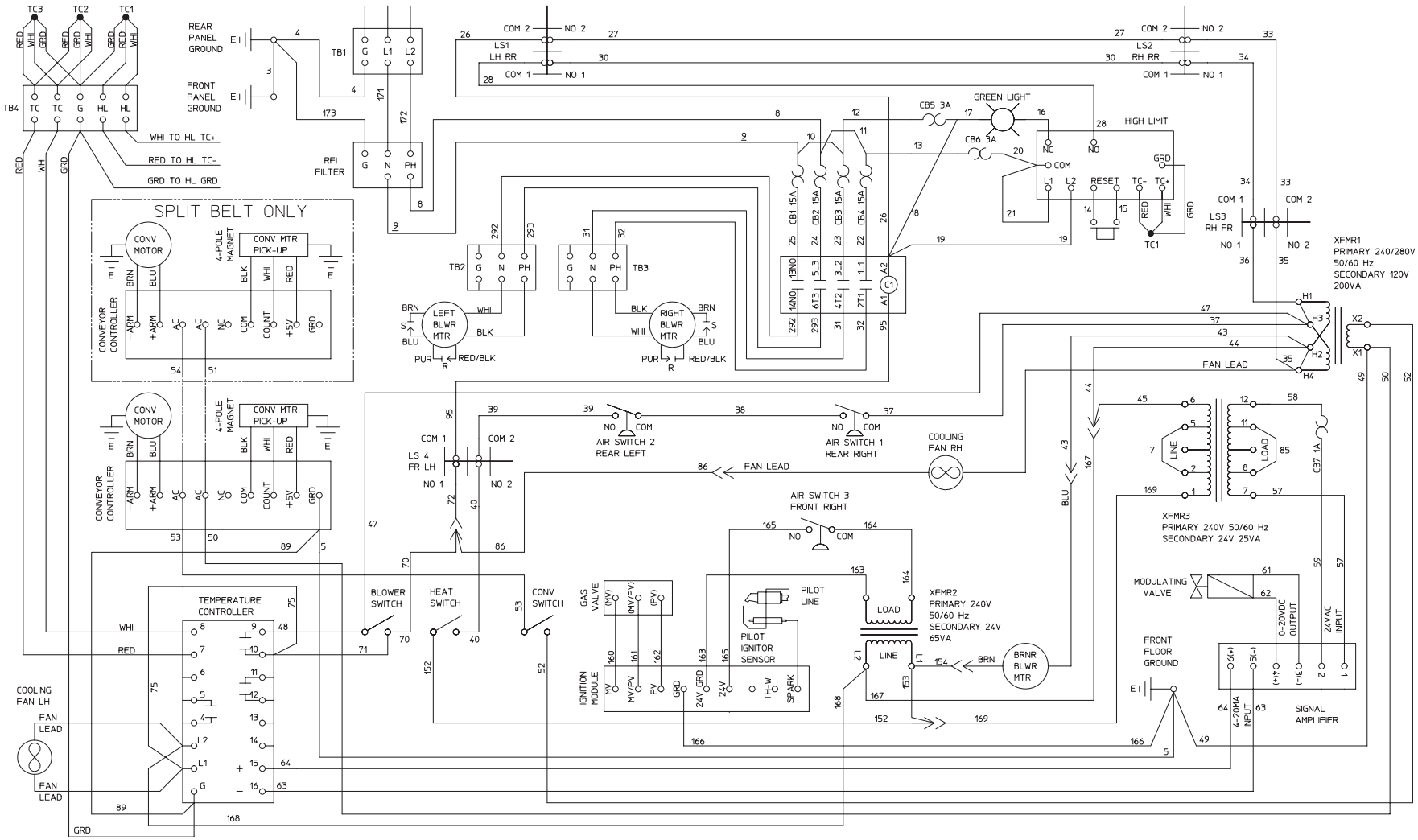

MIDDLEBY MARSHALL PS570G WIRING DIAGRAM G208-240 volt 50/60 Hz, 1 Phase AU

46978D

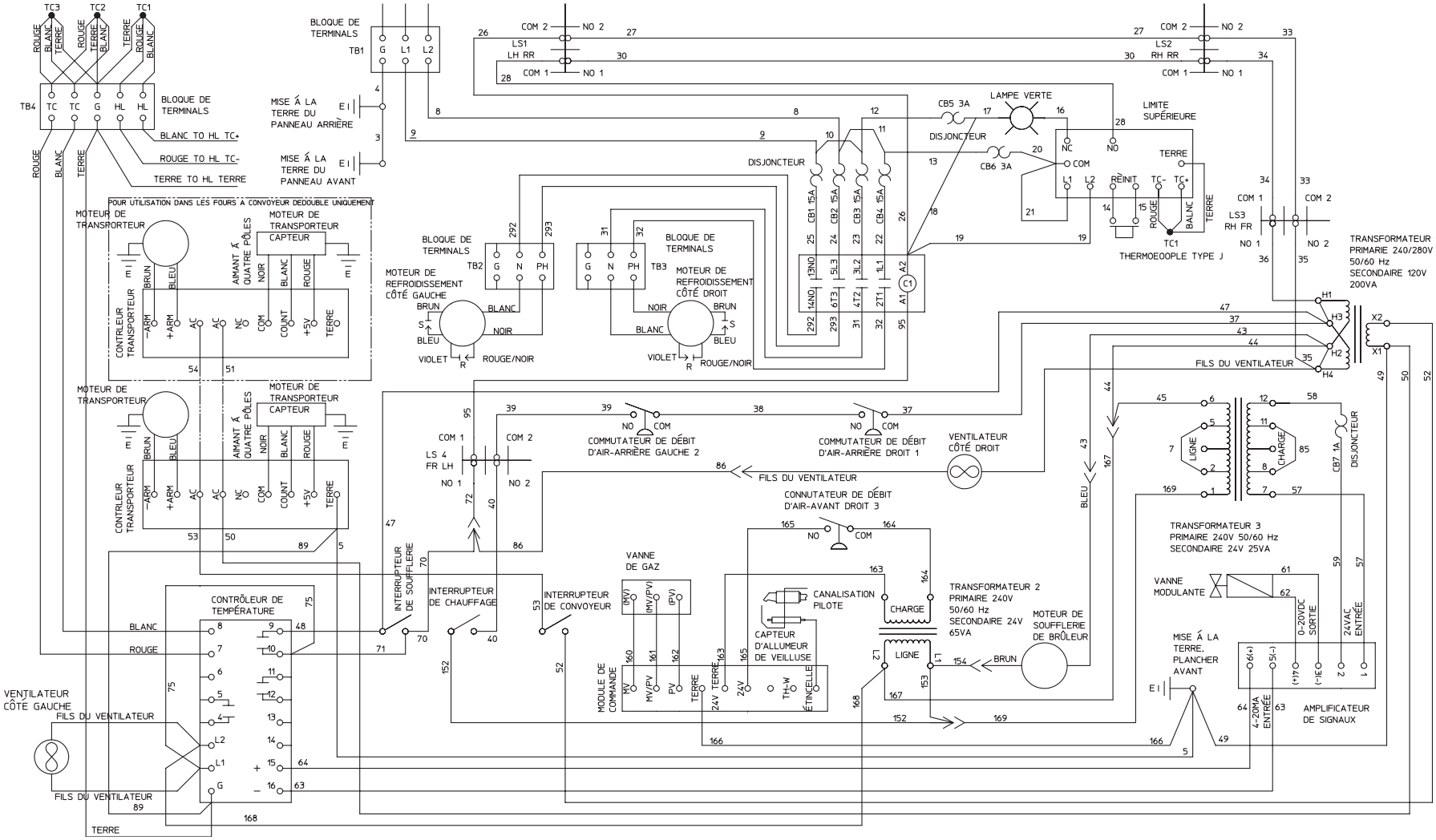

MIDDLEBY MARSHALL PS570G WIRING DIAGRAM G208-240 volt 50/60 Hz, 1 Phase CAN

47285C

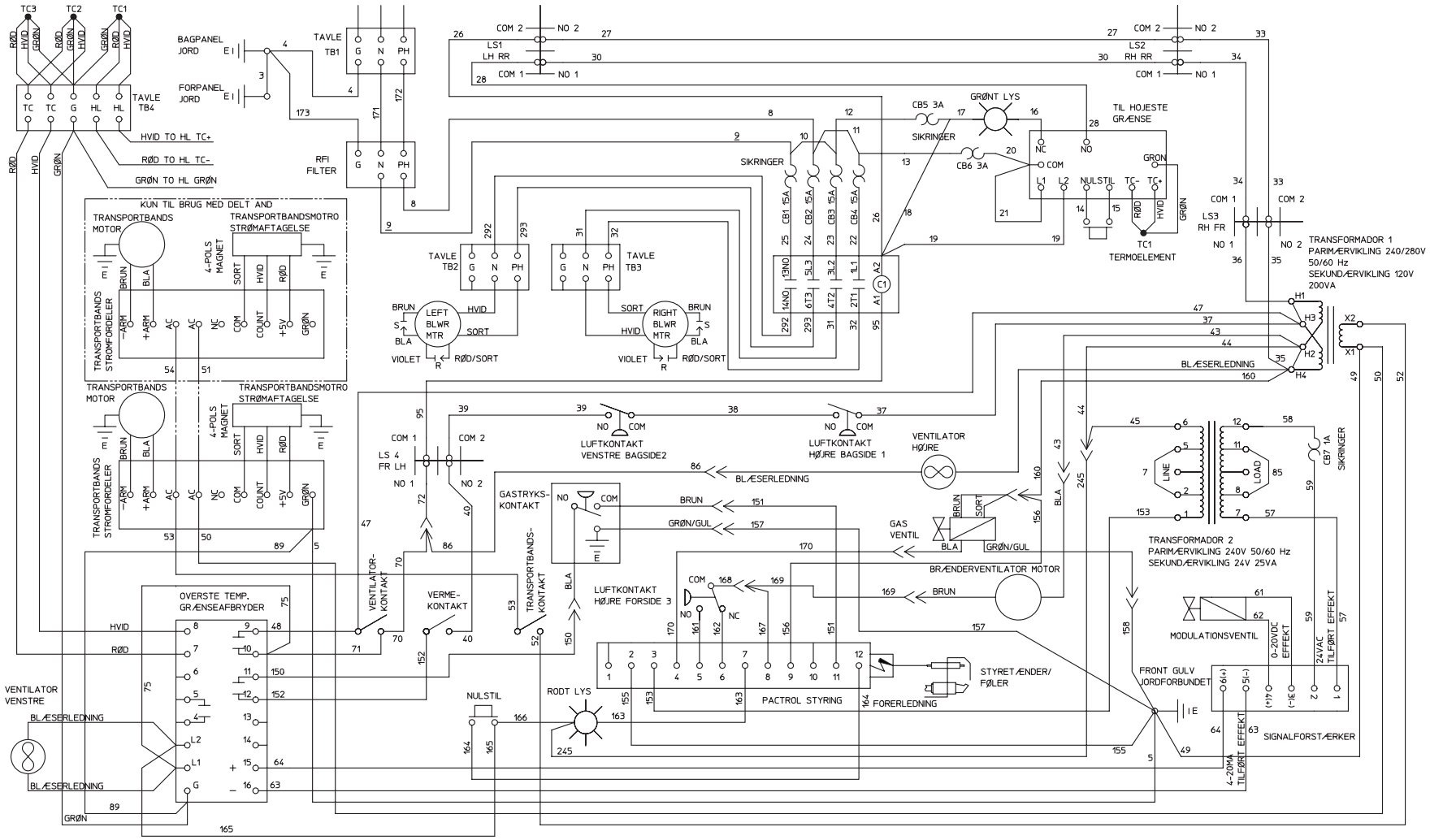

MIDDLEBY MARSHALL PS570G WIRING DIAGRAM G230 volt 50 Hz, 1 Phase CE DN

47263C

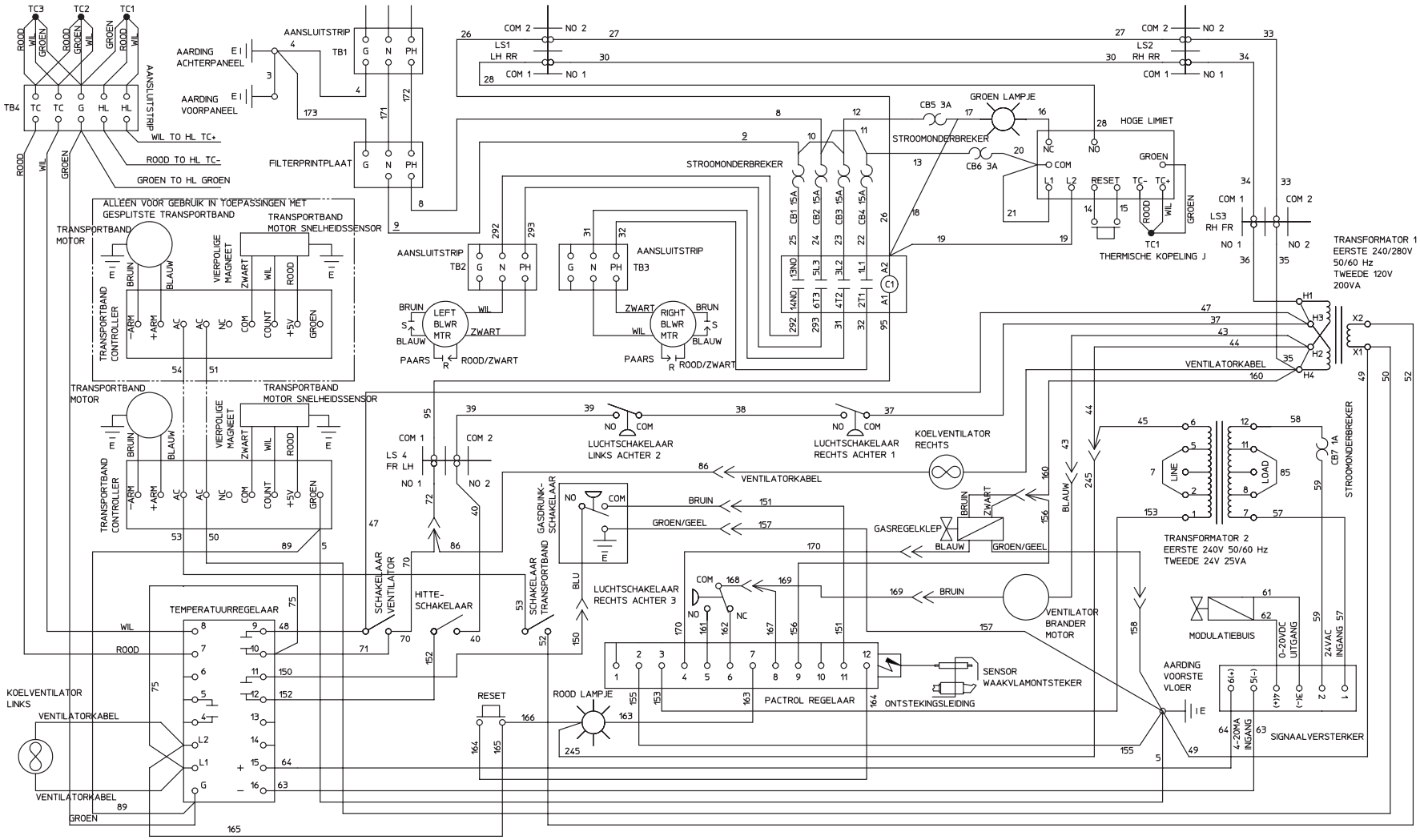

MIDDLEBY MARSHALL PS570G WIRING DIAGRAM G230 volt 50 Hz, 1 Phase CE DUT

47265C

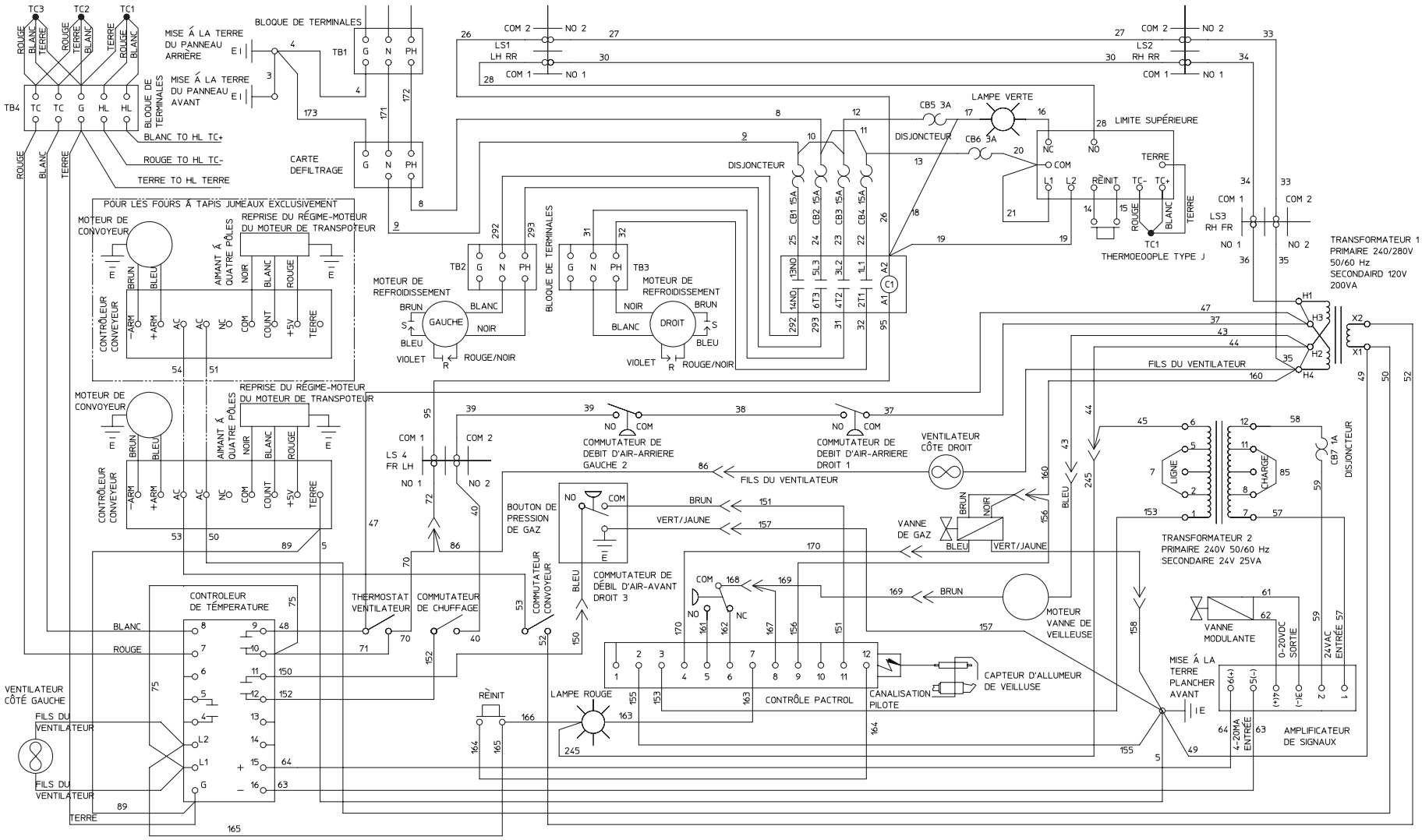

MIDDLEBY MARSHALL PS570G WIRING DIAGRAM G230 volt 50 Hz, 1 Phase CE FR **47257C**

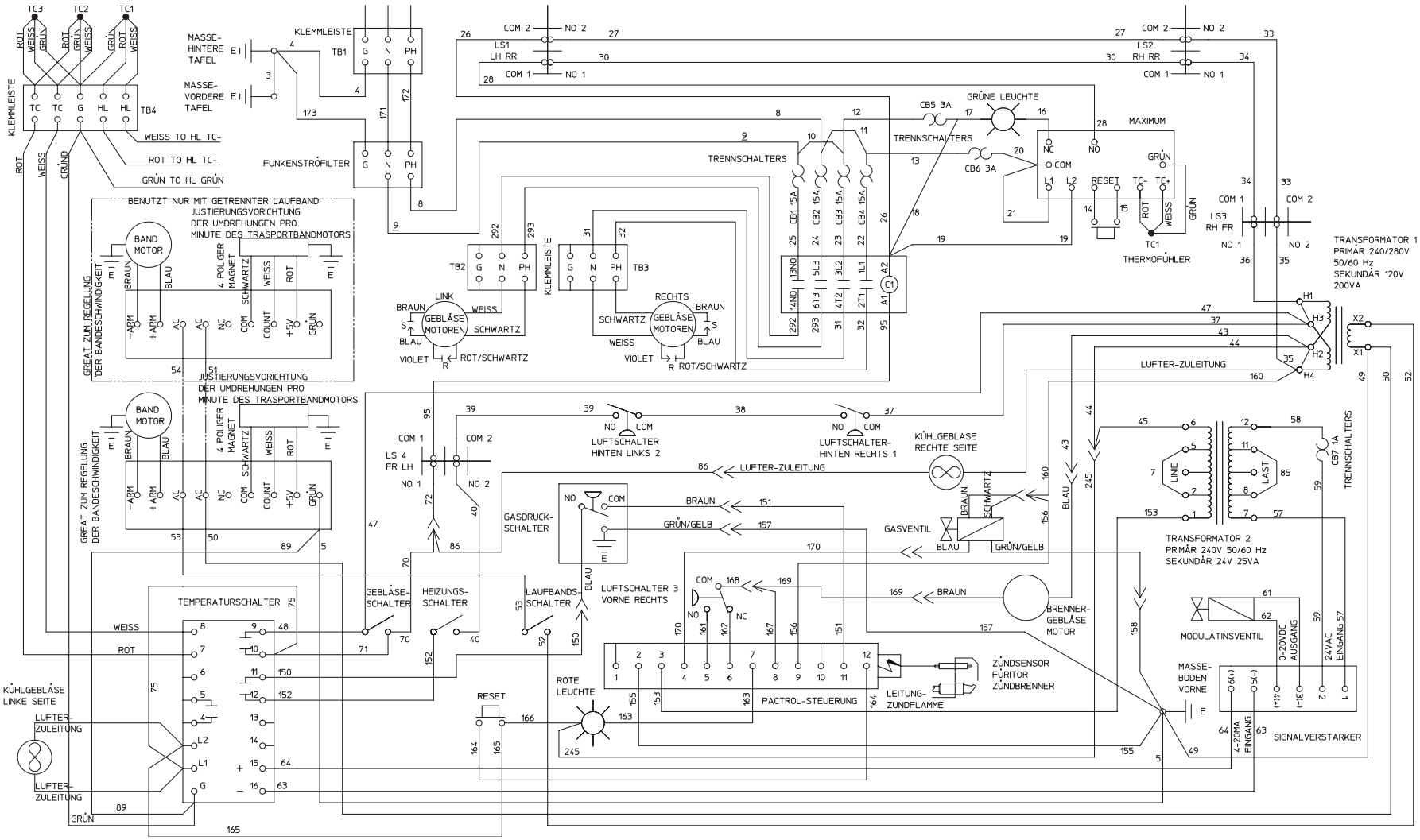

MIDDLEBY MARSHALL PS570G WIRING DIAGRAM G230 volt 50 Hz, 1 Phase CE GM **47255C**

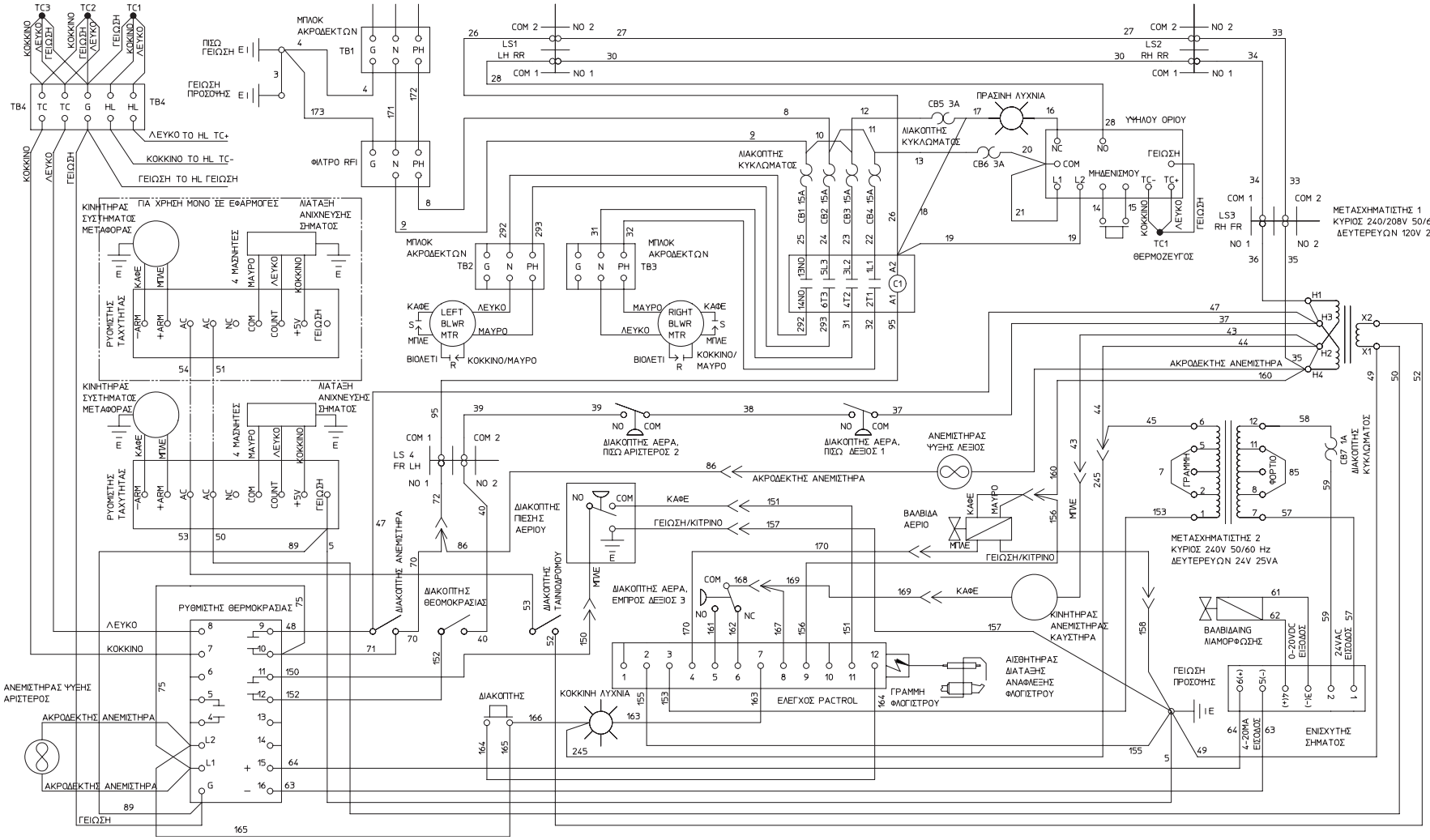

MIDDLEBY MARSHALL PS570G WIRING DIAGRAM G230 volt 50 Hz, 1 Phase CE GK **47261C**

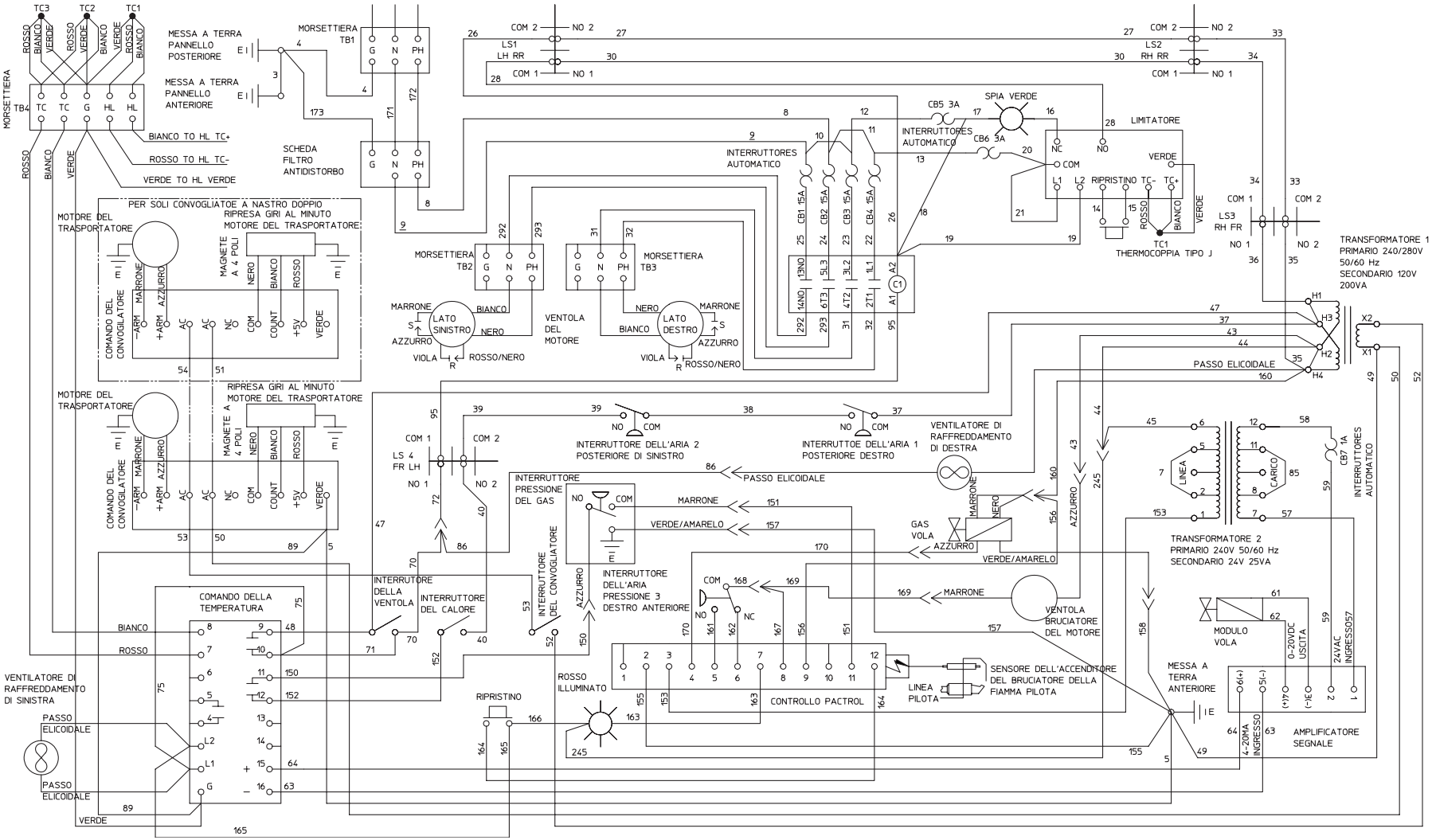

MIDDLEBY MARSHALL PS570G WIRING DIAGRAM G230 volt 50 Hz, 1 Phase CE IT

47253C

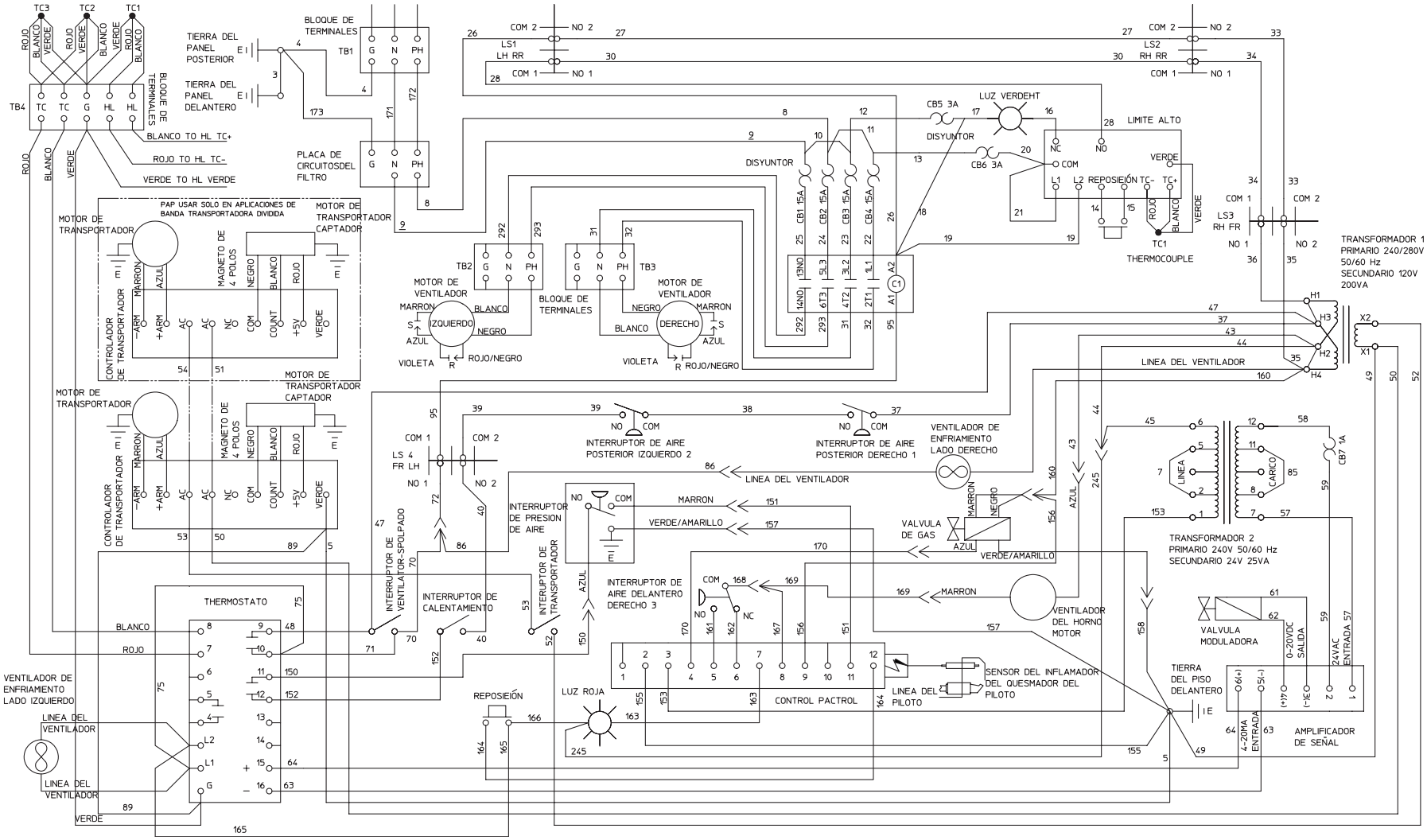

MIDDLEBY MARSHALL PS570G WIRING DIAGRAM G230 volt 50 Hz, 1 Phase CE SP

47259C

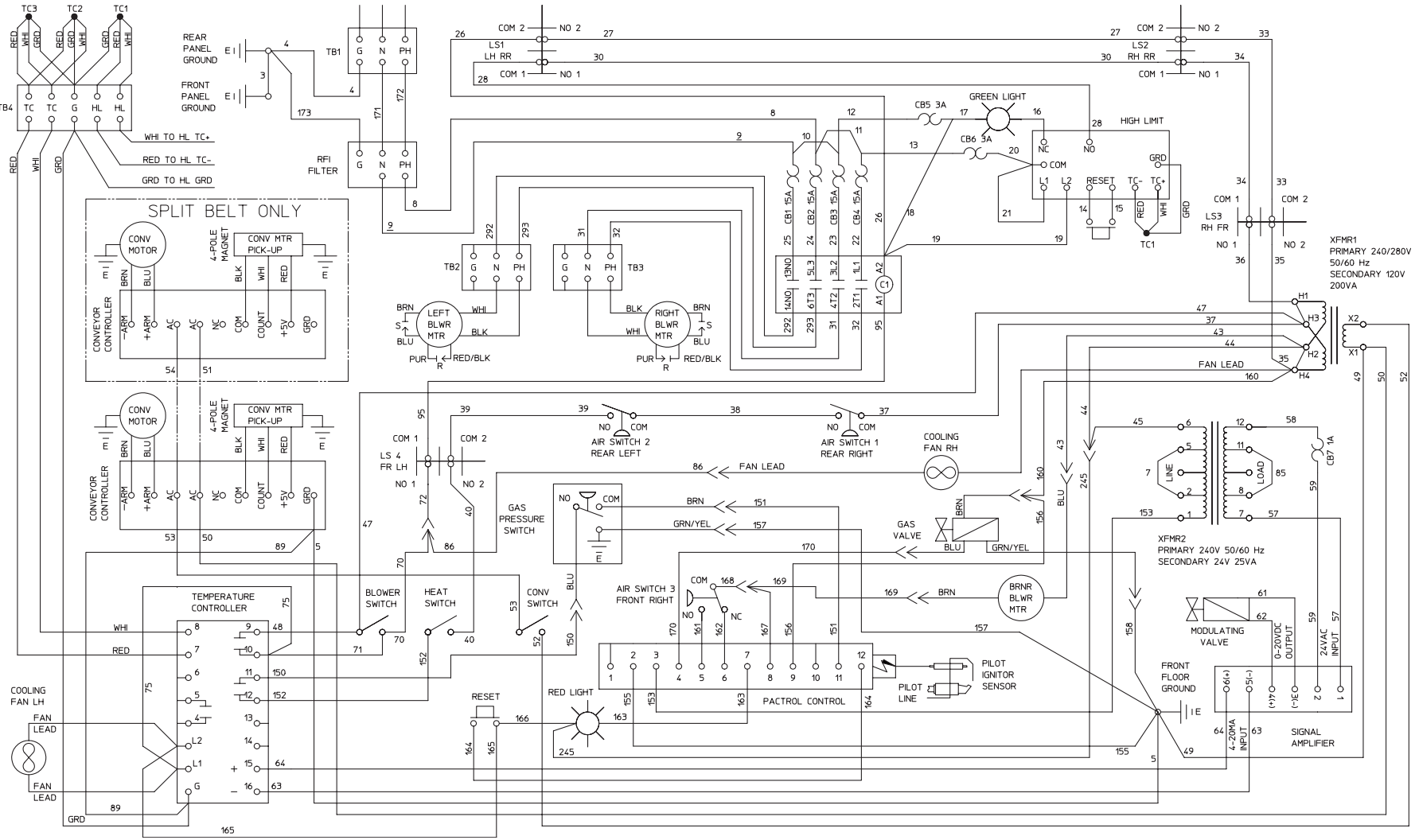

MIDDLEBY MARSHALL PS570G WIRING DIAGRAM G230 volt 50 Hz, 1 Phase CE UK **45587F2**

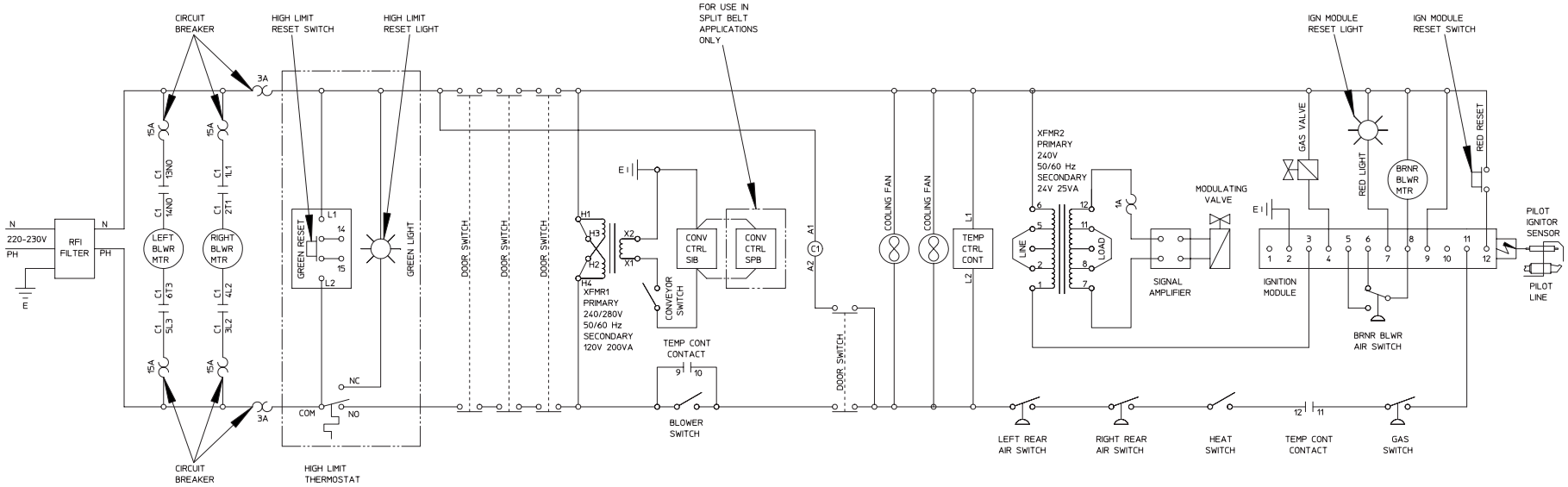

MIDDLEBY MARSHALL PS570G LADDER DIAGRAM G230 volt 50 Hz, 1 Phase CE **45587F1**

NOTES

NOTES