ALTO SHAAM® Cooking & Holding Oven

Electric Manual Control

1000-TH-II
TWO OVENS STACKED
ON CASTERS

750-TH-II/D

500-TH-II

Models:

500-TH-II
500-TH-II/D
750-TH-II
750-TH-II/D
1000-TH-II-SPLIT
1000-TH-II/D-SPLIT
1000-TH-II

- **INSTALLATION**
- **OPERATION**
- **MAINTENANCE**

HALO HEAT®

24•7 Your Service Hotline 1-800-558-8744

W164 N9221 Water Street • P.O. Box 450 • Menomonee Falls, Wisconsin 53052-0450 USA
PHONE: 262.251.3800 • 800.558.8744 USA/CANADA FAX: 262.251.7067 • 800.329.8744 U.S.A. ONLY
WEBSITE: www.alto-shaam.com

PRINTED IN U.S.A. #825/33/37 • 1/06

SAFETY PROCEDURES AND PRECAUTIONS

Knowledge of proper procedures is essential to the safe operation of electrically energized equipment. In accordance with generally accepted product safety labeling guidelines for potential hazards, the following signal words and symbols may be used throughout this manual.

DANGER	Used to indicate the presence of a hazard that **will** cause severe personal injury, death, or substantial property damage if the warning included with this symbol is ignored.
WARNING	Used to indicate the presence of a hazard that **can** cause personal injury, possible death, or major property damage if the warning included with this symbol is ignored.
CAUTION	Used to indicate the presence of a hazard that can or will cause minor or moderate personal injury or property damage if the warning included with this symbol is ignored.
CAUTION	Used to indicate the presence of a hazard that can or will cause minor personal injury, property damage, or a potential unsafe practice if the warning included with this symbol is ignored.
NOTE:	Used to notify personnel of installation, operation, or maintenance information that is important but not hazard related.

1. This appliance is intended to cook, hold or process foods for the purpose of human consumption. No other use for this appliance is authorized or recommended.
2. This appliance is intended for use in commercial establishments where all operators are familiar with the purpose, limitations, and associated hazards of this appliance. Operating instructions and warnings must be read and understood by all operators and users.
3. Any troubleshooting guides, component views, and parts lists included in this manual are for general reference only and are intended for use by qualified technical personnel.
4. This manual should be considered a permanent part of this appliance. This manual and all supplied instructions, diagrams, schematics, parts lists, notices, and labels must remain with the appliance if the item is sold or moved to another location.

ALTO-SHAAM COOK & HOLD OVENS

DELIVERY

This Alto-Shaam appliance has been thoroughly tested and inspected to insure only the highest quality unit is provided. Upon receipt, check for any possible shipping damage and report it at once to the delivering carrier. ***See Transportation Damage and Claims section located in this manual.***

This appliance, complete with unattached items and accessories, may have been delivered in one or more packages. Check to ensure that all standard items and options have been received with each model as ordered.

Save all the information and instructions packed with the appliance. Complete and return the warranty card to the factory as soon as possible to assure prompt service in the event of a warranty parts and labor claim.

This manual must be read and understood by all people using or installing the equipment model. Contact the Alto-Shaam service department if you have any questions concerning installation, operation, or maintenance.

NOTE: All claims for warranty must include the full model number and serial number of the unit.

UNPACKING

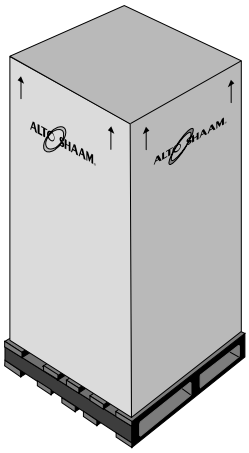

1. Carefully remove the appliance from the carton or crate.

   NOTE: Do not discard the carton and other packaging material until you have inspected the unit for hidden damage and tested it for proper operation.

2. Read all instructions in this manual carefully before initiating the installation of this appliance.

   DO NOT DISCARD THIS MANUAL.
   This manual is considered to be part of the appliance and is to be provided to the owner or manager of the business or to the person responsible for training operators. ***Additional manuals are available from the Alto-Shaam service department.***

3. Remove all protective plastic film, packaging materials, and accessories from the appliance before connecting electrical power. Store any accessories in a convenient place for future use.

OPTIONS AND ACCESSORIES	ITEM		ITEM
Bumper Corner Guards (SET OF FOUR)	5221	Legs, 6" (152mm)	5205
Carving Holders		Security Panel & Key Lock	
—Prime Rib Holder	HL-2635	—500-TH-II	4366
—Ship Round Holder	4459	—750-TH-II (with slab door)	4367
Casters, 5" (127mm)	4007	—750-TH-II/D (with window door)	14374
Door Lock with Key	LK-22567	—1000-TH-II	4368
Drip Pan, Extra Deep		Shelf, Stainless Steel Rib Rack	
—1000-TH-II only	1115	—750-TH-II	SH-2743
Full Perimeter Bumper		—1000-TH-II/SPLIT	SH-2773
—1000-TH-II/Split, 1000-TH-II	4994	Stacking Hardware	5001359

INSTALLATION

DANGER

IMPROPER INSTALLATION, ALTERATION, ADJUSTMENT, SERVICE OR MAINTENANCE COULD RESULT IN SEVERE INJURY, DEATH OR CAUSE PROPERTY DAMAGE.

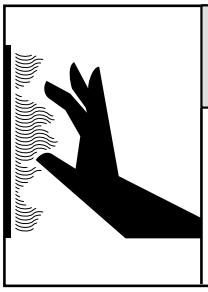

CAUTION

METAL PARTS OF THIS EQUIPMENT BECOME EXTREMELY HOT WHEN IN OPERATION. TO AVOID BURNS, ALWAYS USE HAND PROTECTION WHEN OPERATING THIS APPLIANCE.

CAUTION

TO PREVENT PERSONAL INJURY, USE CAUTION WHEN MOVING OR LEVELING THIS APPLIANCE.

DANGER

DO NOT store or use any flammable liquids or allow flammable vapors in the vicinity of any appliance.

SITE INSTALLATION

The Alto-Shaam cook and hold oven must be installed in a location that will permit the oven to function for its intended purpose and to allow adequate clearance for ventilation, proper cleaning, and maintenance access.

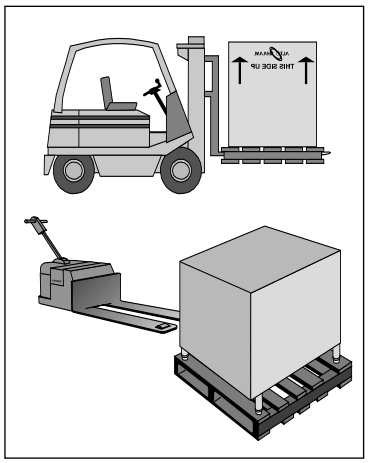

Emissions testing conducted by Underwriters Laboratories, Inc.® was found to be in compliance with the applicable requirements of NFPA96: 2004 Edition, Par. 4.1.1.2. U.L emissions sampling of grease laden vapor resulted in a total of 0.55 milligrams per cubic meter with no visible smoke and is considered representative of all oven models in the line. Based on these results, hood installation and/or outside venting should not be a requirement in most areas. Verify local codes for locations where more restrictive codes are applicable.

1. The oven must be installed on a stable and level surface.
2. **DO NOT** install this oven in any area where it may be affected by any adverse conditions such as steam, grease, dripping water, high temperatures, etc.
3. **DO NOT** store or use any flammable liquids or allow flammable vapors in the vicinity of this oven or any other appliance.
4. This appliance must be kept free and clear of any combustible materials.
5. This appliance must be kept free and clear of any obstructions blocking access for maintenance or service.

MINIMUM CLEARANCE REQUIREMENTS

	COMBUSTIBLE SURFACES	NON-COMBUSTIBLE SURFACES
BACK	3" (76mm)	3" (76mm)
LEFT SIDE	1" (25mm)	1" (25mm)
RIGHT SIDE	1" (25mm)	1" (25mm)
TOP	2" (51mm)	2" (51mm)

INSTALLATION

SITE INSTALLATION

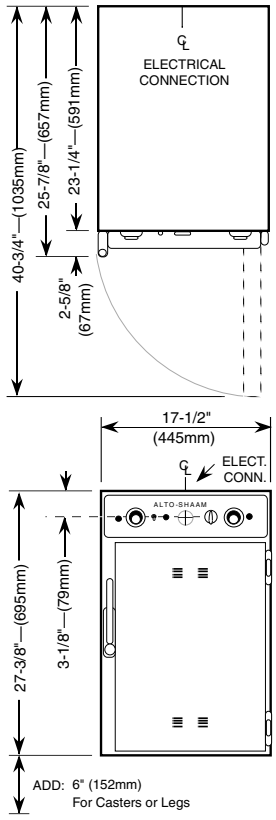

500-TH-II
40 lb max.
Capacity

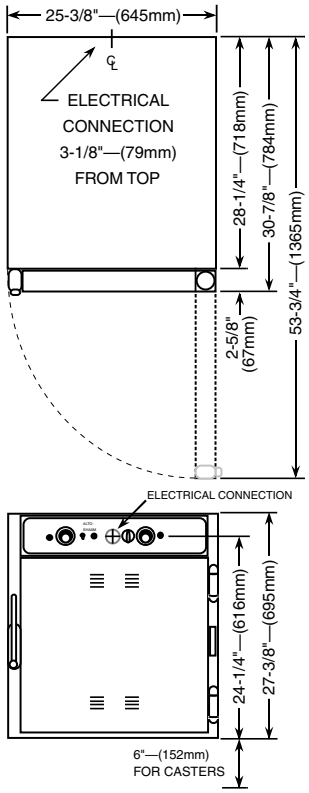

750-TH-II
100 lb max.
Capacity

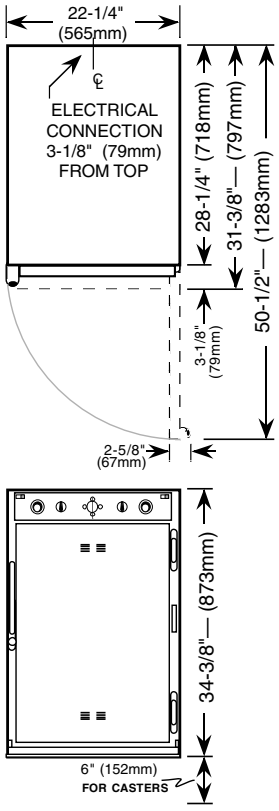

1000-TH-II/SPLIT
120 lb max.
Capacity

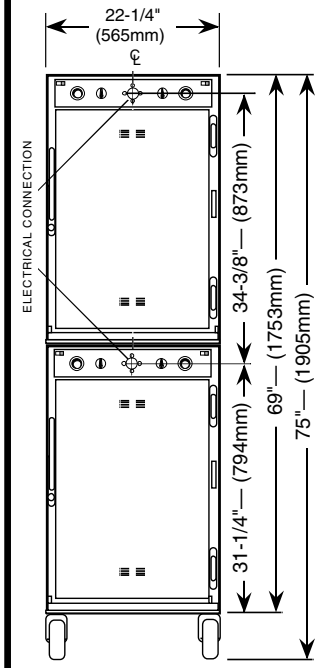

1000-TH-II
120 lb max.
Capacity per Compartment

WEIGHT

	500-TH-II	500-TH-II/D	750-TH-II	750-TH-II/D	1000-TH-II-SPLIT	1000-TH-II/D-SPLIT
NET	139 lb (63 kg)	141 lb (65 kg)	195 lb (89 kg)	205 lb (93 kg)	225 lb (102 kg)	232 lb (105 kg)
SHIP	150 lb (68 kg)	155 lb (70 kg)	225 lb (102 kg)	235 lb (107 kg)	230 lb (104 kg)	235 lb (107 kg)

SITE INSTALLATION

A number of adjustments are associated with initial installation and start-up. It is important that these adjustments be conducted by a qualified service technician. Installation and start-up adjustments are the responsibility of the dealer or user. These adjustments include but are not limited to thermostat calibration, door adjustment, leveling, electrical hook-up and installation of optional casters or legs.

LEVELING

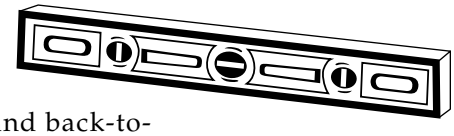

Level the oven from side-to-side and back-to-back with the use of a spirit level. For ovens installed with casters, it is important that the installation surface be level due to the probability of frequent oven repositioning.

We recommend checking the level of the oven periodically to make certain the floor has not shifted nor the oven moved.

NOTE: Failure to properly level this oven can cause improper function and will result in the uneven baking with products consisting of semi-liquid batter.

RESTRAINT REQUIREMENTS —MOBILE EQUIPMENT

WARNING

RISK OF ELECTRIC SHOCK. Appliance must be secured to building structure.

Any appliance that is not furnished with a power supply cord but that includes a set of casters must be installed with a tether. Adequate means must be provided to limit the movement of this appliance without depending on or transmitting stress to the electrical conduit. The following requirements apply:

1. Casters must be a maximum height of 6" (152mm).
2. Two of the casters must of be the locking type.
3. Such mobile appliances or appliances on mobile stands must be installed with the use of a flexible connector secured to the building structure.

A mounting connector for a restraining device is located on the lower back flange of the appliance chassis or on an oven stand, approximately 18" (457mm) from the floor. A flexible connector is not supplied by nor is it available from the factory.

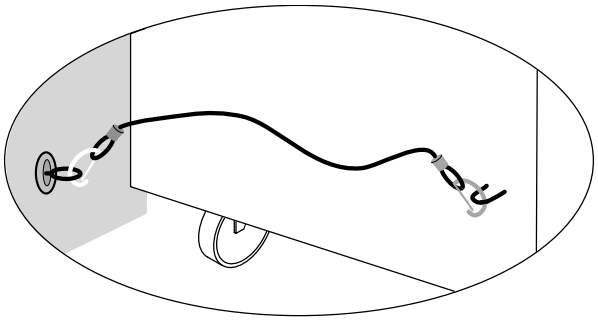

DRIP TRAY MOUNTING INSTRUCTIONS

WARNING

FAILURE TO PROPERLY INSTALL THE DRIP TRAY CAN OR WILL CAUSE MAJOR EQUIPMENT DAMAGE AND WILL RESULT IN A LEAKAGE HAZARD THAT CAN CAUSE PERSONAL INJURY.

EXTRA LARGE DRIP PAN [Optional]
1000-TH • 1000-TH-III = A/S PN: 1115
Bottom of Extra Large Drip Pan is positioned on the bottom (lowest) side-rack position, just above the Standard Drip Pan.

STANDARD DRIP PAN*
[Bottom of oven interior • Below side-racks]

DRIP TRAY*

WHEN MOUNTING DRIP TRAY, SEAL DRIP TRAY HOLDER TO UNIT WITH AN R.T.V. SEALANT

DRIP TRAY HOLDER*

3: 32 x 1/2" SCREWS
[A/S PN: SC-2425]

*** See individual model service manual, views and parts lists, for Alto-Shaam part numbers.**

ALTO-SHAAM®
W164 N9221 Water Street • P. O. Box 450
Menomonee Falls, Wisconsin 53052-0450

#243B • 3/88

ELECTRICAL CONNECTION

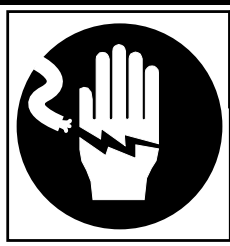

DANGER

ELECTRICAL CONNECTIONS MUST BE MADE BY A QUALIFIED SERVICE TECHNICIAN IN ACCORDANCE WITH APPLICABLE ELECTRICAL CODES.

The appliance must be installed by a qualified service technician. The oven must be properly grounded in accordance with the National Electrical Code and applicable local codes.

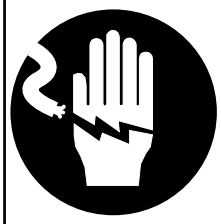

DANGER

To avoid electrical shock, this appliance MUST be adequately grounded in accordance with local electrical codes or, in the absence of local codes, with the current edition of the National Electrical Code ANSI/NFPA No. 70. In Canada, all electrical connections are to be made in accordance with CSA C22.1, Canadian Electrical Code Part 1 or local codes.

Plug the unit into a properly grounded receptacle ONLY, positioning the unit so that the plug is easily accessible in case of an emergency. Arcing will occur when connecting or disconnecting the unit unless all controls are in the "OFF" position.

Proper receptacle or outlet configuration or permanent wiring for this unit must be installed by a licensed electrician in accordance with applicable local electrical codes.

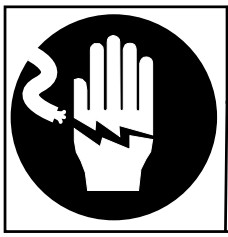

DANGER

ENSURE POWER SOURCE MATCHES VOLTAGE STAMPED ON APPLIANCE NAMEPLATE

All 208-240V 500-TH-II models will function properly within a voltage range of 200 and 240.

750-TH-II and 1000-TH-II models at 208-240V are dual rated units with a conversion switch mounted under an access cover on the rear of the oven, near the power cord.

With the voltage conversion switch in the 200-208V (UPPER) position, the oven will function properly with a source voltage of between 200 and 208.

With the voltage conversion switch in the 220-240V (LOWER) position, the unit will function properly with a source voltage of between 220 and 240.

NOTE: ALL 208-240V units are shipped from the factory with the voltage conversion switch in the 220-240 position.

All 125V rated units will function properly with a source voltage of between 100 and 125, 60 Hz.

The 125V rated units are provided with a cord and plug [NEMA #5-20P]. Have a licensed electrician install the proper outlet configuration as required for the unit in accordance with applicable, local electrical codes. This will assure a safe and trouble-free installation.

Ensure that the voltage conversion switch position and the available power source match.

ELECTRICAL

	VOLTAGE	PHASE	CYCLE/HZ	AMPS	kW		VOLTAGE	PHASE	CYCLE/HZ	AMPS	kW
500-TH-II	at 120	1	60	16.0	1.95	750-TH-II 1000-TH-II	at 125	1	60	16.8	2.1
	at 208		60	12.5	2.2		at 208		60	14.4	3.0
	at 240		60	12.5	3.0		at 240		60	14.4	2.6
	at 230		50	12.0	2.75		at 230		50	10.4	2.4

OPERATING INSTRUCTIONS

USER SAFETY INFORMATION

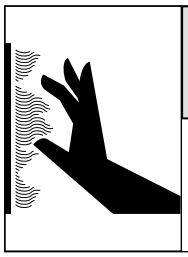

CAUTION

Metal parts of this equipment become extremely hot when in operation. To avoid burns, always use hand protection when operating this oven.

The Alto-Shaam cook and hold oven is intended for use in commercial establishments by qualified operating personnel where all operators are familiar with the purpose, limitations, and associated hazards of this appliance. Operating instructions and warnings must be read and understood by all operators and users.

START-UP OPERATION

BEFORE INITIAL USE:

Interior oven surfaces must be heated to remove surface oils and the accompanying odor produced during the first use of the oven.

1. Wipe all wire shelves, side racks and the full oven interior with a clean, damp cloth. Install the oven side racks, oven shelves, and external drip tray. Shelves are installed with the curved edge toward the back of the oven. Insert the drip pan on the interior bottom surface of the oven.
2. Close the oven doors, press the power switch to the on position, and set the thermostat to 300°F (149°C).
3. Allow the oven to cycle for approximately 2 hours or until no odor is detected.

PREHEATING:

Always preheat the oven for a minimum of 20 minutes before cooking product. Follow the operating instructions indicated on the next page of this manual.

DANGER

AT NO TIME SHOULD THE INTERIOR OR EXTERIOR BE STEAM CLEANED, HOSED DOWN, OR FLOODED WITH WATER OR LIQUID SOLUTION OF ANY KIND.
DO NOT USE WATER JET TO CLEAN.
SEVERE DAMAGE OR ELECTRICAL HAZARD COULD RESULT.
WARRANTY BECOMES VOID IF APPLIANCE IS FLOODED.

DANGER

DISCONNECT UNIT FROM POWER SOURCE BEFORE CLEANING OR SERVICING.

OPERATING INSTRUCTIONS

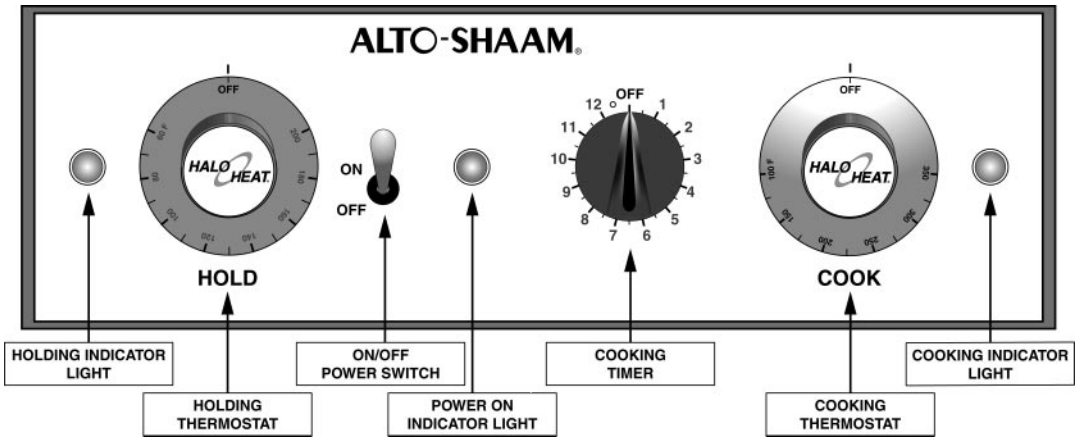

MANUAL CONTROL OPERATION:

1. Turn oven POWER SWITCH 'ON'.
   — POWER 'ON' INDICATOR LIGHT will illuminate and will remain lit as long as the Power Switch is in the 'ON' position.
2. Set the HOLD THERMOSTAT to the required holding temperature.
   — HOLDING INDICATOR LIGHT will illuminate as the Hold Thermostat calls for heat. This process will continue as long as the Power Switch and Hold Thermostat are 'ON'.
3. Set COOK THERMOSTAT to the required cooking temperature.
4. To preheat the oven, activate the Cook Thermostat by turning the COOKING TIMER clockwise.
   — COOKING INDICATOR LIGHT and HOLDING INDICATOR LIGHT will illuminate as the unit calls for heat. This process will continue until the COOKING TIMER cycles to the 'OFF' position.

These instructions are basic operational guidelines only. For complete instructions, see A Guide to Low Temperature Cooking and Holding by HALO HEAT packed with the oven.

COOKING OVEN CHARACTERISTICS:

The oven is equipped with a special, high-heat-density, heating cable. Through the Halo Heat concept, the heating cable is mounted against the walls of the cooking cavity to provide an evenly applied, thermostatically controlled, heat source. The design and operational characteristics of the oven eliminate the need for a moisture pan or a heat circulating fan. Through even heat application, the quality of a food product is maintained for many hours.

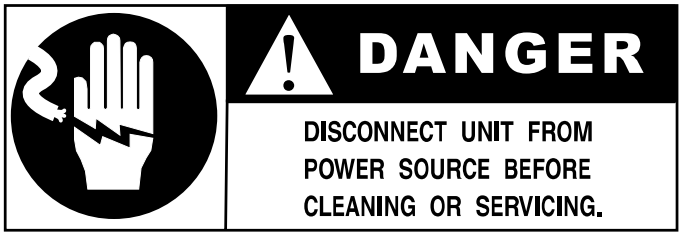

GENERAL HOLDING GUIDELINES

Chefs, cooks and other specialized food service personnel employ varied methods of cooking. Proper holding temperatures for a specific food product must be based on the moisture content of the product, product density, volume, and proper serving temperatures. Safe holding temperatures must also be correlated with palatability in determining the length of holding time for a specific product.

Halo Heat maintains the maximum amount of product moisture content without the addition of water, water vapor, or steam. Maintaining maximum natural product moisture preserves the natural flavor of the product and provides a more genuine taste. In addition to product moisture retention, the gentle properties of Halo Heat maintain a consistent temperature throughout the cabinet without the necessity of a heat distribution fan, thereby preventing further moisture loss due to evaporation or dehydration.

In an enclosed holding environment, too much moisture content is a condition which can be relieved. A product achieving extremely high temperatures in preparation must be allowed to decrease in temperature before being placed in a controlled holding atmosphere. If the product is not allowed to decrease in temperature, excessive condensation will form increasing the moisture content on the outside of the product.

Most Halo Heat Holding Equipment is provided with a thermostat control between 60° and 200°F (16° to 93°C). If the unit is equipped with vents, close the vents for moist holding and open the vents for crisp holding.

HOLDING TEMPERATURE RANGE

MEAT	FAHRENHEIT	CELSIUS
BEEF ROAST — Rare	140°F	60°C
BEEF ROAST — Med/Well Done	160°F	71°C
BEEF BRISKET	160° — 175°F	71° — 79°C
CORN BEEF	160° — 175°F	71° — 79°C
PASTRAMI	160° — 175°F	71° — 79°C
PRIME RIB — Rare	140°F	60°C
STEAKS — Broiled/Fried	140° — 160°F	60° — 71°C
RIBS — Beef or Pork	160°F	71°C
VEAL	160° — 175°F	71° — 79°C
HAM	160° — 175°F	71° — 79°C
PORK	160° — 175°F	71° — 79°C
LAMB	160° — 175°F	71° — 79°C
POULTRY		
CHICKEN — Fried/Baked	160° — 175°F	71° — 79°C
DUCK	160° — 175°F	71° — 79°C
TURKEY	160° — 175°F	71° — 79°C
GENERAL	160° — 175°F	71° — 79°C
FISH/SEAFOOD		
FISH — Baked/Fried	160° — 175°F	71° — 79°C
LOBSTER	160° — 175°F	71° — 79°C
SHRIMP — Fried	160° — 175°F	71° — 79°C
BAKED GOODS		
BREADS/ROLLS	120° — 140°F	49° — 60°C
MISCELLANEOUS		
CASSEROLES	160° — 175°F	71° — 79°C
DOUGH — Proofing	80° — 100°F	27° — 38°C
EGGS —Fried	150° — 160°F	66° — 71°C
FROZEN ENTREES	160° — 175°F	71° — 79°C
HORS D'OEUVRES	160° — 180°F	71° — 82°C
PASTA	160° — 180°F	71° — 82°C
PIZZA	160° — 180°F	71° — 82°C
POTATOES	180°F	82°C
PLATED MEALS	180°F	82°C
SAUCES	140° — 200°F	60° — 93°C
SOUP	140° — 200°F	60° — 93°C
VEGETABLES	160° — 175°F	71° — 79°C

The holding temperatures listed are suggested guidelines only.

CLEANING AND PREVENTIVE MAINTENANCE

PROTECTING STAINLESS STEEL SURFACES

It is important to guard against corrosion in the care of stainless steel surfaces. Harsh, corrosive, or inappropriate chemicals can completely destroy the protective surface layer of stainless steel. Abrasive pads, steel wool, or metal implements will abrade surfaces causing damage to this protective coating and will eventually result in areas of corrosion. Even water, particularly hard water that contains high to moderate concentrations of chloride, will cause oxidation and pitting that result in rust and corrosion. In addition, many acidic foods spilled and left to remain on metal surfaces are contributing factors that will corrode surfaces.

Proper cleaning agents, materials, and methods are vital to maintaining the appearance and life of this appliance. Spilled foods should be removed and the area wiped as soon as possible but at the very least, a minimum of once a day. Always thoroughly rinse surfaces after using a cleaning agent and wipe standing water as quickly as possible after rinsing.

CLEANING AGENTS

Use non-abrasive cleaning products designed for use on stainless steel surfaces. Cleaning agents must be chloride-free compounds and must not contain quaternary salts. Never use hydrochloric acid (muriatic acid) on stainless steel surfaces. Always use the proper cleaning agent at the manufacturer's recommended strength. Contact your local cleaning supplier for product recommendations.

CLEANING MATERIALS

The cleaning function can usually be accomplished with the proper cleaning agent and a soft, clean cloth. When more aggressive methods must be employed, use a non-abrasive scouring pad on difficult areas and make certain to scrub with the visible grain of surface metal to avoid surface scratches. Never use wire brushes, metal scouring pads, or scrapers to remove food residue.

CAUTION

CAUTION

TO PROTECT STAINLESS STEEL SURFACES, COMPLETELY AVOID THE USE OF ABRASIVE CLEANING COMPOUNDS, CHLORIDE BASED CLEANERS, OR CLEANERS CONTAINING QUATERNARY SALTS. NEVER USE HYDROCHLORIC ACID (MURIATIC ACID) ON STAINLESS STEEL.

CARE AND CLEANING

EQUIPMENT CARE

Under normal circumstances, this oven should provide you with long and trouble free service. There is no preventative maintenance required, however, the following Equipment Care Guide will maximize the potential life and trouble free operation of this oven. The cleanliness and appearance of this equipment will contribute considerably to operating efficiency and savory, appetizing food. Good equipment that is kept clean works better and lasts longer.

CLEAN DAILY

1. Disconnect unit from power source, and let cool.
2. Remove all detachable items such as wire shelves, side racks, and drip pans. Clean these items separately.
3. Wipe the interior metal surfaces of the oven with a paper towel to remove loose food debris.
4. Clean the interior metal surfaces of the cabinet with a damp clean cloth or sponge and any good commercial detergent.

NOTE: Avoid the use of abrasive cleaning compounds, chloride based cleaners, or cleaners containing quaternary salts. Never use hydrochloric acid (muriatic acid) on stainless steel.

5. Spray heavily soiled areas with a water soluble degreaser and let stand for 10 minutes, then remove soil with a plastic scouring pad.
6. Wipe control panel, door vents, door handles, and door gaskets thoroughly since these areas harbor food debris.
7. Rinse surfaces by wiping with sponge and clean warm water.
8. Remove excess water with sponge and wipe dry with a clean cloth or air dry. Leave doors open until interior is completely dry. Replace side racks and shelves.
9. Wipe door gaskets and control panel dry with a clean, soft cloth.
10. Interior can be wiped with a sanitizing solution after cleaning and rinsing. This solution must be approved for use on stainless steel food contact surfaces.
11. To help maintain the protective film coating on polished stainless steel, clean the exterior of the cabinet with a cleaner recommended for stainless steel surfaces. Spray the cleaning agent on a clean cloth and wipe with the grain of the stainless steel.
12. Clean any glass with a window cleaner.

Always follow appropriate state or local health (hygiene) regulations regarding all applicable cleaning and sanitation requirements for equipment.

CLEAN THE DOOR VENTS

Door vents need to be inspected and cleaned as required.

CHECK OVERALL CONDITION OF OVEN ONCE A MONTH

Check the oven once a month for physical damage and loose screws. Correct any problems before they begin to interfere with the operation of the oven.

DANGER

AT NO TIME SHOULD THE INTERIOR OR EXTERIOR BE STEAM CLEANED, HOSED DOWN, OR FLOODED WITH WATER OR LIQUID SOLUTION OF ANY KIND.
DO NOT USE WATER JET TO CLEAN.
SEVERE DAMAGE OR ELECTRICAL HAZARD COULD RESULT.
WARRANTY BECOMES VOID IF APPLIANCE IS FLOODED.

DANGER

DISCONNECT UNIT FROM POWER SOURCE BEFORE CLEANING OR SERVICING.

DO NOT USE OVEN IF CONTROLS ARE NOT PROPERLY FUNCTIONING

Refer to the Trouble Shooting Guide located in this manual or call an authorized service technician.

Food flavor and aroma are usually so closely related that it is difficult, if not impossible, to separate them. There is also an important, inseparable relationship between cleanliness and food flavor. Cleanliness, top operating efficiency, and appearance of equipment contribute considerably to savory, appetizing foods. Good equipment that is kept clean, works better and lasts longer.

Most food imparts its own particular aroma and many foods also absorb existing odors. Unfortunately, during this absorption, there is no distinction between GOOD and BAD odors. The majority of objectionable flavors and odors troubling food service operations are caused by bacteria growth. Sourness, rancidity, mustiness, stale or other OFF flavors are usually the result of germ activity.

The easiest way to insure full, natural food flavor is through comprehensive cleanliness. This means good control of both visible soil (dirt) and invisible soil (germs). A thorough approach to sanitation will provide essential cleanliness. It will assure an attractive appearance of equipment, along with maximum efficiency and utility. More importantly, a good sanitation program provides one of the key elements in the prevention of food-borne illnesses.

A controlled holding environment for prepared foods is just one of the important factors involved in the prevention of food-borne illnesses. Temperature monitoring and control during receiving, storage, preparation, and the service of foods are of equal importance.

The most accurate method of measuring safe temperatures of both hot and cold foods is by internal product temperature. A quality thermometer is an effective tool for this purpose, and should be routinely used on all products that require holding at a specific temperature.

A comprehensive sanitation program should focus on the training of staff in basic sanitation procedures. This includes personal hygiene, proper handling of raw foods, cooking to a safe internal product temperature, and the routine monitoring of internal temperatures from receiving through service.

Most food-borne illnesses can be prevented through proper temperature control and a comprehensive program of sanitation. Both these factors are important to build quality service as the foundation of customer satisfaction. Safe food handling practices to prevent food-borne illness is of critical importance to the health and safety of your customers. HACCP, an acronym for Hazard Analysis (at) Critical Control Points, is a quality control program of operating procedures to assure food integrity, quality, and safety. Taking steps necessary to augment food safety practices are both cost effective and relatively simple. While HACCP guidelines go far beyond the scope of this manual, additional information is available by contacting:

Center for Food Safety and Applied Nutrition
Food and Drug Administration
1-888-SAFEFOOD

INTERNAL FOOD PRODUCT TEMPERATURES		
HOT FOODS		
DANGER ZONE	40° TO 140°F	(4° TO 60°C)
CRITICAL ZONE	70° TO 120°F	(21° TO 49°C)
SAFE ZONE	140° TO 165°F	(60° TO 74°C)
COLD FOODS		
DANGER ZONE	ABOVE 40°F	(ABOVE 4°C)
SAFE ZONE	36°F TO 40°F	(2°C TO 4°C)
FROZEN FOODS		
DANGER ZONE	ABOVE 32°F	(ABOVE 0°C)
CRITICAL ZONE	0° TO 32°F	(-18° TO 0°C)
SAFE ZONE	0°F OR BELOW	(-18°C OR BELOW)

SERVICE

THERMOSTAT/PILOT LIGHT SEQUENCE

Whenever the thermostat is turned "ON", the indicator light will indicate the power ON/OFF condition of the heating cable, and consequently, the cycling of the cabinet as it maintains the dialed cavity temperature. If this light does not illuminate after normal start-up, the main power source, thermostat, and/or light must be checked. If the warming cabinet does not hold the temperature as dialed, the calibration of the thermostat must be checked. If the warming cabinet fails to heat or heats continuously with the thermostat "OFF", the thermostat must be initially checked for proper operation. If these items are checked and found to be in order, a continuity and resistance check of the heating cable should be made. *SEE CIRCUIT DIAGRAM.*

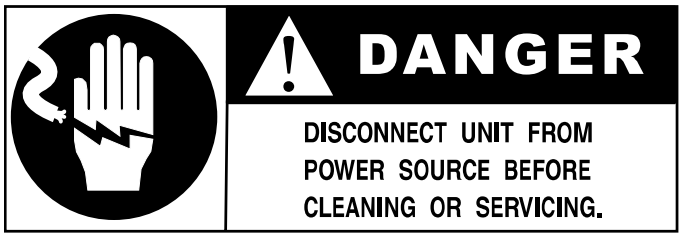

THERMOSTAT CALIBRATION

The thermostat is precision calibrated at the factory. Normally, no adjustment or recalibration is necessary unless the thermostat has been mishandled in transit, changed or abused while in service. A thermostat with a sensing bulb operates on hydraulic pressure, consequently, any bending of the bulb results in a change in its volume, and alters the accuracy of the thermostat calibration.

A thermostat should be checked or recalibrated by placing a quality, thermal indicator at the center of an empty holding cavity. **DO NOT CALIBRATE WITH ANY FOOD PRODUCT IN THE CABINET.** The thermostat should be set, and should be allowed to stabilize at that setting for a minimum of one hour. Following temperature stabilization, the center of the thermal swing of the air temperature within the cabinet should approximately coincide with the thermostat setting.

If calibration is necessary, the calibration screw should be adjusted with great care. The calibration screw of the thermostat is located in the thermostat dial shaft. With the shaft held stationary, a minute, clockwise motion of the calibration screw appreciably lowers the thermostat setting. A reverse, or counter-clockwise motion appreciably raises the thermostat setting. After achieving the desired cycling of the thermostat, the calibration screw must be sealed. Place a few drops of enamel sealant directly on the calibration screw.

(Red nail polish or equivalent is acceptable.)

TROUBLE SHOOTING CHECKLIST

TROUBLE	POSSIBLE CAUSE	REMEDY
Unit does not operate.	Insufficient electric power unit. Defective plug or cord. Power switch defective.	Check power source. Check and repair if necessary. Replace.
Cooking temperature not correct.	Cook thermostat out of calibration.	Calibrate.
Holding temperature not correct.	Hold thermostat out of calibration.	Calibrate.
Timer runs down, but oven will not go into HOLD.	Timer not de-energizing cook circuit.	Replace timer.
Cook thermostat erratic — will not hold calibration.	Cook thermostat.	Replace thermostat.
Hold thermostat erratic — will not hold calibration.	Hold thermostat.	Replace thermostat.
Oven goes from cooking temperature to cold.	Hold thermostat.	Replace hold thermostat.
Oven will not go into cook cycle when timer and cook thermostat are ON.	Timer or contactor.	With timer turned ON, line voltage should appear across terminal 2 and 3 of timer. If not, replace timer. If line voltage does appear across terminal 2 and 3 of timer, it should also appear across holding coil of contactor. If line voltage does appear across holding coil, and it won't close its contacts, replace contactor.
It takes too long to cook. (Temperature O.K.)	Heating element open, resulting in low wattage.	Replace element.
Cannot control temperature but thermostats check O.K.	Heating element grounded.	Replace element.

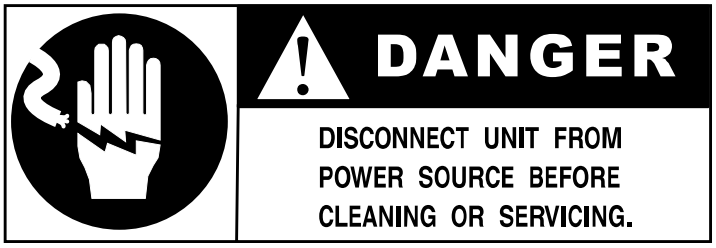

500-TH-II PARTS LIST

11/5/99	PART DESCRIPTION	UNIT QUANTITY	ALTO-SHAAM PART NUMBER
1.	TOP ASSEMBLY	1	4131
2.	TOP ASSEMBLY MOUNTING SCREWS	5	SC-2425
3.	TUBE TOP MOUNTING SCREWS	2	SC-2332
4.	TUBE BOTTOM MOUNTING SCREWS	2	SC-2425
	BOTTOM FILLER (not shown)	1	1001
	CAPILLARY GUARD MOUNTING SCREWS (not shown)	4	SC-2425
	CAPILLARY GUARD (not shown)	2	GD-2450
	CAPILLARY BULB MOUNTING SCREWS (not shown)	4	SC-2077
	CAPILLARY BULB HOLD-DOWN (not shown)	4	BK-2609
	THERMOSTAT CAPILLARY BULB (not shown)	2	—
5.	HOLD THERMOSTAT KNOB (Fahrenheit)	1	KN-3469
	HOLD THERMOSTAT KNOB (Celsius)	1	KN-3474
6.	COOK THERMOSTAT KNOB (Fahrenheit)	1	KN-3468
	COOK THERMOSTAT KNOB (Celsius)	1	KN-3475
7.	TIMER KNOB	1	—
	TIMER NUT (not shown)	1	—
8.	SWITCH NUT	1	NU-2355
9.	CONTROL PANEL MOUNTING SCREWS	1	SC-2459
	CONTROL PANEL MOUNTING SCREWS	5	SC-2425
10.	CONTROL PANEL	1	4700
11.	CONTROL CHASSIS MOUNTING SCREWS	4	SC-2459
12.	CONTROL CHASSIS	1	4146
13.	COVER PLATE (not shown)	3	1324
	COVER PLATE MOUNTING SCREWS	6	SC-2459
14.	TUBE ASSEMBLY	1	—
15.	CASING ASSEMBLY	1	14688
16.	INSULATION TUBE MOUNTING SCREWS	6	SC-2459
17.	INSULATION TUBE ASSEMBLY (Left-hand)	1	14537
18.	INSULATION TUBE (Right-hand)	1	11073
19.	INSULATION: 25" x 100" (635mm x 2540mm)	1	IN-22364
20.	CABLE CONNECTION HARDWARE		
21.	HEATING CABLE: 125V, Length 99' (30175mm)	1	CB-3045
	HEATING CABLE: 208-240V, Length 119' (36271mm)	1	CB-3045
22.	DOOR ASSEMBLY, RIGHT-HAND (Slab)	1	5146
	DOOR ASSEMBLY, LEFT-HAND (Slab)	1	15520
	DOOR ASSEMBLY, RIGHT-HAND (Window)	1	5235
	DOOR ASSEMBLY, LEFT-HAND (Window)	1	15528
23.	HINGE SET (1 pair of 2 hinges)	1	HG-2014
	HINGE TO DOOR MOUNTING SCREWS (not shown)	6	SC-2072
	HINGE TO UNIT MOUNTING SCREWS (not shown)	6	SC-2073
24.	DOOR HANDLE	1	HD-2566
	DOOR HANDLE MOUNTING SCREWS (not shown)	4	SC-2073
	DOOR CATCH MOUNTING SCREWS (not shown)	2	SC-2162
25.	SIDE RACK	2	SR-2386
26.	SHELF	2	SH-2326
27.	DRIP PAN	1	14813

	PART DESCRIPTION	UNIT QUANTITY	ALTO-SHAAM PART NUMBER
28.	HOLD THERMOSTAT	1	TT-3057
29.	COOK THERMOSTAT	1	TT-3329
30.	CABLE AND POWER INDICATOR LIGHTS		
	—125V	3	LI-3027
	—Red, 208-240V, 60 Hz	3	LI-3025
	—White, 230V, 50 Hz	3	LI-3951
31.	TIMER: 125V	1	TR-3504
	TIMER: 208-240V—60 Hz	1	TR-3318
	TIMER: 230V—50 Hz	1	TR-3402
32.	POWER SWITCH: 125V, 208-240V, 60Hz	1	SW-3528
	POWER SWITCH: 230V, 50 Hz	1	SW-3950
33.	CONTACTOR: 125V	1	CN-3487
	CONTACTOR: 208-240V-60 Hz, 230V-50 Hz (TUV)	1	CN-3052
34.	FILTER, LINE 230V ONLY	1	FI-33225
35.	HOLDER, BIMET THERMOSTAT (not shown)	1	13958
	THERMOSTAT HOLDER MTG. SCREWS	2	SC-2459
	THERMOSTAT, HI LIMIT, RESET (not shown)	1	TT-33476
36.	FAN: 125V	2	FA-3485
	FAN: 208-240V	2	FA-3342
	FAN BLADE	2	FA-3343
37.	DOOR GASKET: Length 7' (2134mm)	1	GS-2398
38.	CORD: 125V	1	CD-3397
	CORDSET: 230V (Type HO7 RN-F)	1	CD-3922
39.	DRIP TRAY HOLDER	1	11535
40.	DRIP TRAY HOLDER MOUNTING SCREWS	3	SC-2425
41.	DRIP TRAY	1	11534

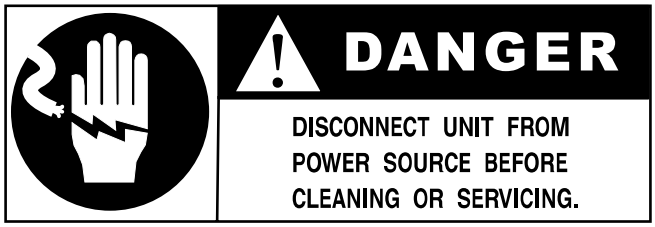

Cable Heating Service Kit		#4880 208-240V	#4879 125V
includes:			
CB-3045	Cable Heating Element	134 feet	112 feet
CR-3226	Ring Connector	4	6
IN-3488	Insulation Corner	1 foot	1 foot
BU-3105	Shoulder Bushing	4	6
BU-3106	Cup Bushing	4	6
SL-3063	Insulating Sleeve	4	6
TA-3540	Electrical Tape	1 roll	1 roll
ST-2439	Stud 10-32	4	6
NU-2215	Hex Nut 10-32	8	12

500-TH/II

SERVICE VIEW 1/16"=1"

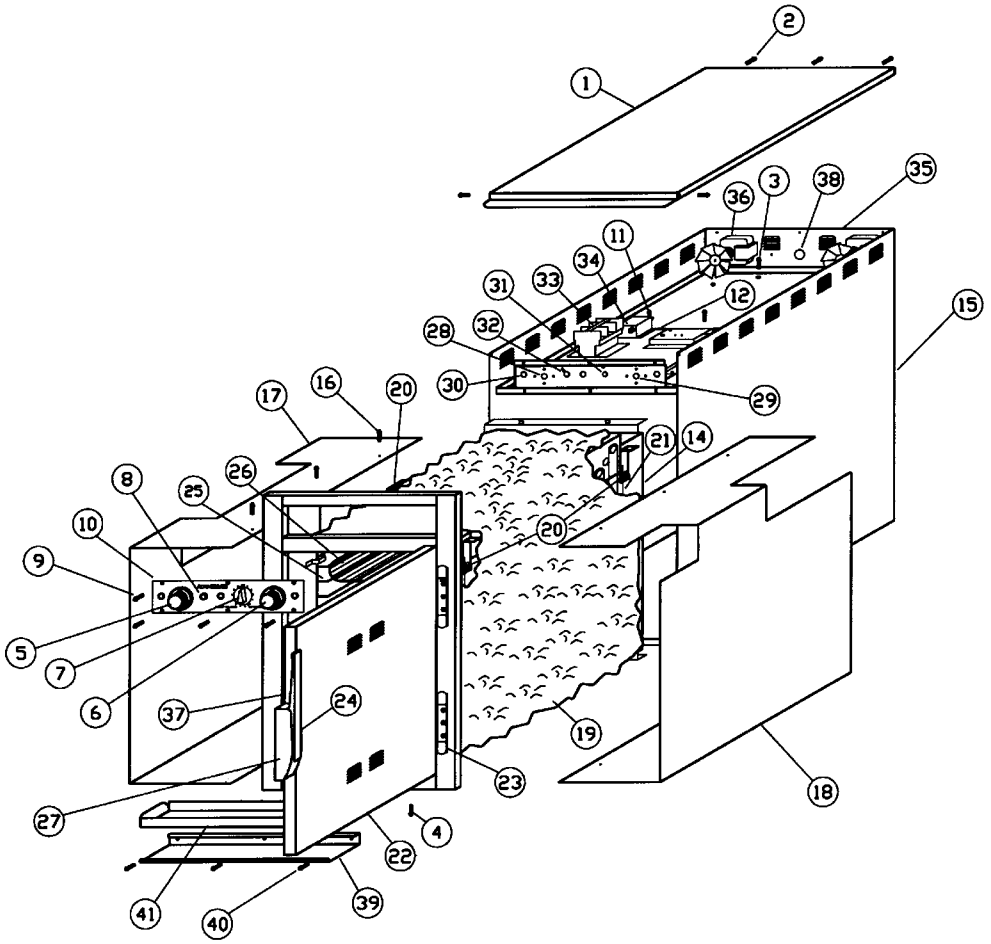

I:\ENG\PROD\SM\500-TH.DWG

750-TH-II PARTS LIST

5/1/01

	PART DESCRIPTION	UNIT QUANTITY	ALTO-SHAAM PART NUMBER
1.	TOP ASSEMBLY	1	4174
2.	TOP ASSEMBLY MOUNTING SCREWS	5	SC-2425
3.	TUBE TOP MOUNTING SCREWS	2	SC-2332
4.	TUBE BOTTOM MOUNTING SCREWS	2	SC-2425
	BOTTOM FILLER (not shown)	1	1002
	CAPILLARY GUARD MOUNTING SCREWS (not shown)	4	SC-2425
	CAPILLARY GUARD (not shown)	2	GD-2450
	CAPILLARY BULB MOUNTING SCREWS (not shown)	4	SC-2077
	CAPILLARY BULB HOLD-DOWN (not shown)	4	BK-2609
	THERMOSTAT CAPILLARY BULB (not shown)	2	—
5.	HOLD THERMOSTAT KNOB (Fahrenheit)	1	KN-3469
	HOLD THERMOSTAT KNOB (Celsius)	1	KN-3474
6.	COOK THERMOSTAT KNOB (Fahrenheit)	1	KN-3468
	COOK THERMOSTAT KNOB (Celsius)	1	KN-3475
7.	TIMER KNOB	1	—
	TIMER NUT (not shown)	1	—
8.	SWITCH NUT	1	NU-2355
9.	CONTROL PANEL MOUNTING SCREWS	1	SC-2459
	CONTROL PANEL MOUNTING SCREWS	5	SC-2425
10.	CONTROL PANEL	1	4537
11.	CABLE COVER PLATE MOUNTING SCREWS	4	SC-2459
12.	CABLE COVER PLATE	2	1324
13.	TUBE ASSEMBLY	1	—
14.	CASING ASSEMBLY	1	4601
15.	INSULATION TUBE MOUNTING SCREWS	6	SC-2459
16.	INSULATION TUBE (Left-hand)	1	4170
17.	INSULATION TUBE (Right-hand)	1	1163
18.	INSULATION: 25" x 120" (635mm x 3048mm)	1	IN-22364
19.	CABLE CONNECTION HARDWARE		
20.	HEATING CABLE: 125V, Length 95' (38956mm)	1	CB-3045
	HEATING CABLE: 208-240V, Length 189' (57607mm)	1	CB-3045
21.	DOOR ASSEMBLY, RIGHT-HAND (Slab)	1	5178
	DOOR ASSEMBLY, LEFT-HAND (Slab)	1	15538
	DOOR ASSEMBLY, RIGHT-HAND (Window)	1	5452
	DOOR ASSEMBLY, LEFT-HAND (Window)	1	5471
22.	HINGE SET (1 pair of 2 hinges)	1	HG-2014
	HINGE TO DOOR MOUNTING SCREWS (not shown)	6	SC-2072
	HINGE TO UNIT MOUNTING SCREWS (not shown)	6	SC-2073
23.	DOOR HANDLE	1	HD-2566
	DOOR HANDLE MOUNTING SCREWS (not shown)	4	SC-2073
	DOOR CATCH MOUNTING SCREWS (not shown)	2	SC-2162
24.	DOOR GASKET: Length 9' (2743mm)	1	GS-2398
25.	SIDE RACK	2	SR-2303
	SIDE RACK FOR PAN SLIDE, 230V ONLY	2	14979
26.	SHELF	3	SH-2324
27.	DRIP PAN	1	14831
28.	HOLD THERMOSTAT	1	TT-3057
29.	COOK THERMOSTAT	1	TT-3329
30.	CABLE AND POWER INDICATOR LIGHTS		
	—125V	3	LI-3027
	—Red, 208-240V, 60 Hz	3	LI-3025
	—White, 230V, 50 Hz	3	LI-3951
31.	TIMER: 125V	1	TR-3504
	TIMER: 208V, 240V—60 Hz	1	TR-3318
	TIMER: 230V—50Hz	1	TR-3402
32.	POWER SWITCH: 125V, 208-240V, 60 Hz	1	SW-3528
	POWER SWITCH: 230V, 50 Hz	1	SW-3950
33.	CONTACTOR: 125V	1	CN-3487
	CONTACTOR: 208-240V-60 Hz, 230V-50 Hz (TUV)	1	CN-3052
34.	FAN: 125V	2	FA-3485
	FAN: 208-240V	2	FA-3342
	FAN BLADE	2	FA-3343
35.	VOLTAGE CONVERSION SWITCH	1	SW-3528
36.	CORD: 125V	1	CD-3397
	CORDSET: 230V (Type HO7 RN-F)	1	CD-3922
37.	DRIP TRAY HOLDER	1	11259
38.	DRIP TRAY HOLDER MOUNTING SCREWS	3	SC-2425
39.	DRIP TRAY	1	11258
40.	FILTER, LINE, 230V ONLY	1	FI-33225
41.	HOLDER, THERMOSTAT (not shown)	1	13958
	HOLDER MTG. SCREWS	2	SC-2459
	THERMOSTAT, HI LIMIT, RESET, 230V ONLY	1	TT-33476
42.	BELL TIMER/KNOB FOR DELUXE MODELS ONLY (not shown)	1	TR-22388

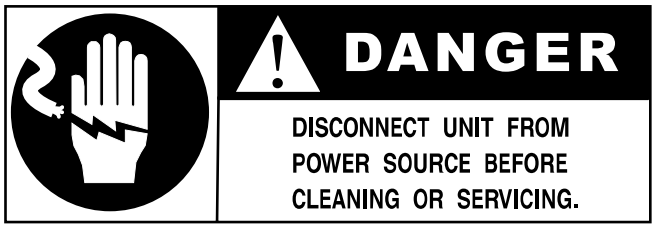

Cable Heating Service Kit

includes:		#4881 208-240V	#4879 125V
CB-3045	Cable Heating Element	210 feet	112 feet
CR-3226	Ring Connector	12	6
IN-3488	Insulation Corner	1 foot	1 foot
BU-3105	Shoulder Bushing	12	6
BU-3106	Cup Bushing	12	6
SL-3063	Insulating Sleeve	12	6
TA-3540	Electrical Tape	1 roll	1 roll
ST-2439	Stud 10-32	12	6
NU-2215	Hex Nut 10-32	24	12

750-TH/II

SERVICE VIEW

1/16"=1"

REVISED: 12/17/98 JMM

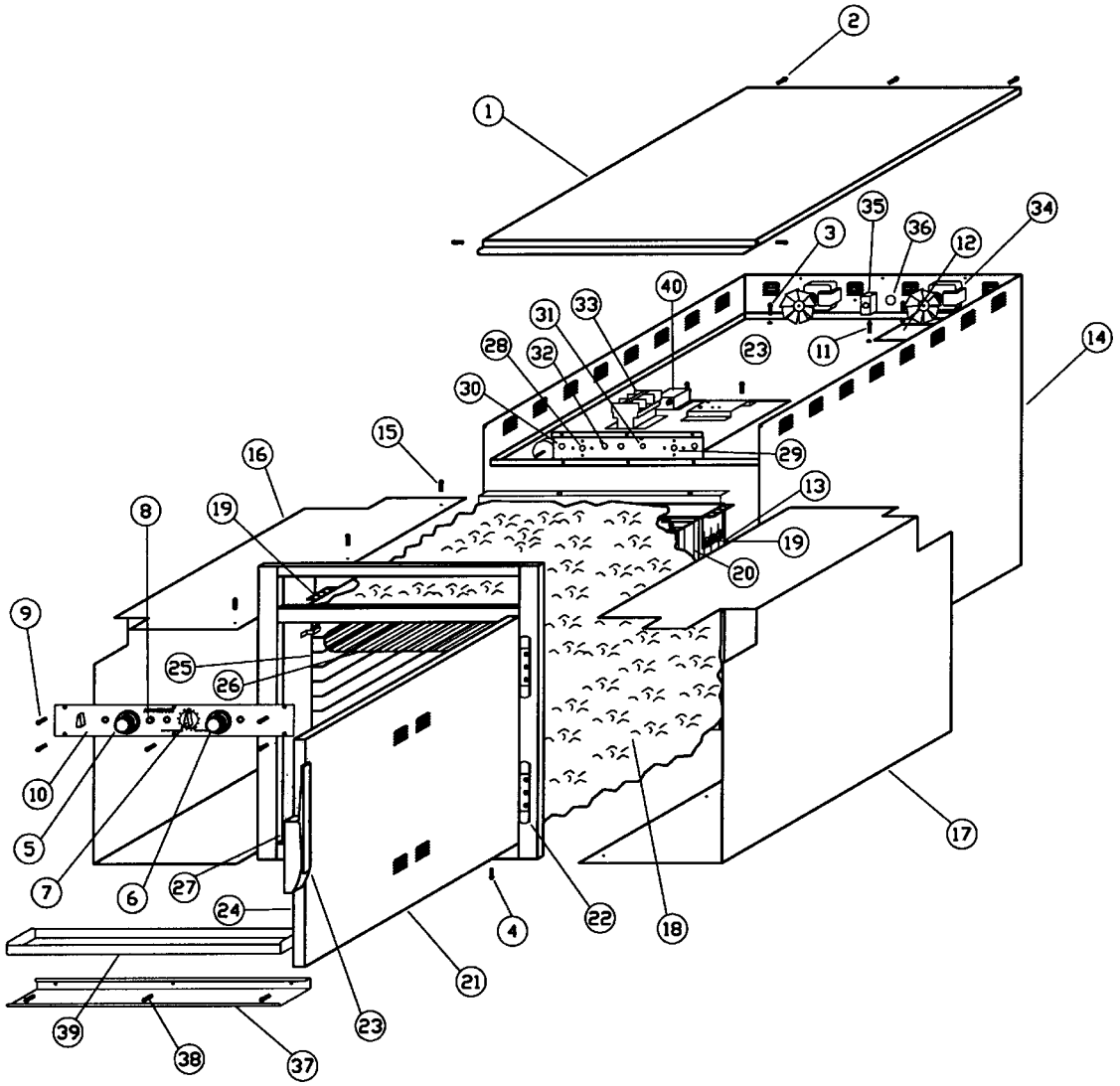

SERVICE

1000-TH-II/SPLIT PARTS LIST

9/26/02	PART DESCRIPTION	UNIT QUANTITY	ALTO-SHAAM PART NUMBER
1.	TOP ASSEMBLY	1	4200
2.	TOP ASSEMBLY MOUNTING SCREWS	5	SC-2425
3.	TUBE TOP MOUNTING SCREWS	2	SC-2332
4.	TUBE BOTTOM MOUNTING SCREWS	2	SC-2425
	BOTTOM FILLER (not shown)	1	1003
	CAPILLARY GUARD MOUNTING SCREWS (not shown)	4	SC-2425
	CAPILLARY GUARD (not shown)	2	GD-2450
	CAPILLARY BULB MOUNTING SCREWS (not shown)	4	SC-2077
	CAPILLARY BULB HOLD-DOWN (not shown)	4	BK-2609
	THERMOSTAT CAPILLARY BULB (not shown)	2	—
5.	HOLD THERMOSTAT KNOB (Fahrenheit)	1	KN-3469
	HOLD THERMOSTAT KNOB (Celsius)	1	KN-3474
6.	COOK THERMOSTAT KNOB (Fahrenheit)	1	KN-3468
	COOK THERMOSTAT KNOB (Celsius)	1	KN-3475
7.	TIMER KNOB	1	—
	TIMER NUT (not shown)	1	—
8.	SWITCH NUT	1	NU-2355
9.	CONTROL PANEL MOUNTING SCREWS	1	SC-2459
	CONTROL PANEL MOUNTING SCREWS	5	SC-2425
10.	CONTROL PANEL	1	4696
	or CONTROL PANEL W/GAUGE	1	14089
11.	CABLE COVER PLATE MOUNTING SCREWS	4	SC-2459
12.	CABLE COVER PLATE	2	1324
13.	TUBE ASSEMBLY	1	—
14.	CASING ASSEMBLY	1	4764
	CASING PLATE COVER	1	11900
	CASING PLATE COVER MOUNTING SCREWS	2	SC-2459
15.	INSULATION TUBE MOUNTING SCREWS	6	SC-2459
16.	INSULATION TUBE ASSEMBLY (Left-hand)	1	14538
17.	INSULATION TUBE (Right-hand)	1	11074
18.	INSULATION: 25" x 120" (635mm x 3048mm)	1	IN-22364
19.	CABLE CONNECTION HARDWARE		
20.	HEATING CABLE: 125V Length 90' (27432mm)	1	CB-3045
	HEATING CABLE: 208-240V Length 183' (55778mm)	1	CB-3045
21.	DOOR ASSEMBLY, RIGHT-HAND (Slab)	1	5204
	DOOR ASSEMBLY, LEFT-HAND (Slab)	1	15557
	DOOR ASSEMBLY, RIGHT-HAND (Window)	1	5527
	DOOR ASSEMBLY, LEFT-HAND (Window)	1	5961
22.	HINGE SET (1 pair of 2 hinges)	1	HG-2014
	HINGE TO DOOR MOUNTING SCREWS (not shown)	6	SC-2072
	HINGE TO UNIT MOUNTING SCREWS (not shown)	6	SC-2073
23.	DOOR HANDLE	1	HD-2566
	DOOR HANDLE MOUNTING SCREWS (not shown)	4	SC-2073
	DOOR CATCH MOUNTING SCREWS (not shown)	2	SC-2162
24.	DOOR GASKET: Length 8' (2438mm)	1	GS-2398
25.	SIDE RACK	2	SR-2266
26.	SHELF	3	SH-2325

	PART DESCRIPTION	UNIT QUANTITY	ALTO-SHAAM PART NUMBER
27.	DRIP PAN	1	14824
28.	HOLD THERMOSTAT	1	TT-3057
29.	COOK THERMOSTAT	1	TT-3329
30.	CABLE AND POWER INDICATOR LIGHTS		
	—125V	3	LI-3027
	—Red, 208-240V, 60 Hz	3	LI-3025
	—White, 230V, 50 Hz	3	LI-3951
31.	TIMER: 125V	1	TR-3504
	TIMER: 208V, 240V—60 Hz	1	TR-3318
	TIMER: 230V—50Hz	1	TR-3402
32.	POWER SWITCH: 125V, 208-240V, 60 Hz	1	SW-3528
	POWER SWITCH: 230V, 50 Hz	1	SW-3950
33.	CONTACTOR: 125V	1	CN-3487
	CONTACTOR: 208-240V-60 Hz, 230V-50Hz (TUV)	1	CN-3052
34.	FAN: 125 V	2	FA-3485
	FAN: 208-240V	2	FA-3342
	FAN BLADE	2	FA-3343
35.	VOLTAGE CONVERSION SWITCH	1	SW-3528
36.	CORD: 125V	1	CD-3397
	CORDSET: 230V (Type HO7 RN-F)	1	CD-3922
37.	DRIP TRAY HOLDER	1	1114
38.	DRIP TRAY HOLDER MOUNTING SCREWS	3	SC-2425
39.	DRIP TRAY	1	1113
40.	FILTER, LINE, 230V ONLY	1	FI-33225
41.	HOLDER, THERMOSTAT (not shown)	1	13958
	HOLDER MTG. SCREWS	2	SC-2459
	THERMOSTAT, HI LIMIT, RESET, 230V ONLY	1	TT-33476

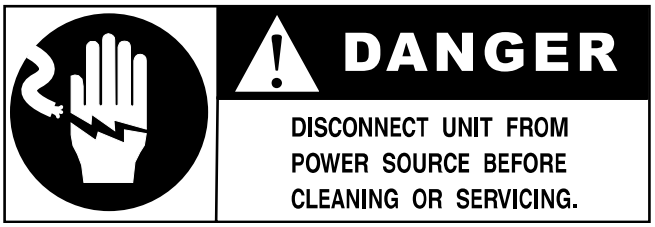

Cable Heating Service Kit		#4881 208-240V	#4879 125V
includes:			
CB-3045	Cable Heating Element	210 feet	112 feet
CR-3226	Ring Connector	12	6
IN-3488	Insulation Corner	1 foot	1 foot
BU-3105	Shoulder Bushing	12	6
BU-3106	Cup Bushing	12	6
SL-3063	Insulating Sleeve	12	6
TA-3540	Electrical Tape	1 roll	1 roll
ST-2439	Stud 10-32	12	6
NU-2215	Hex Nut 10-32	24	12

1000-TH/II

SERVICE VIEW

1/16"=1"

REVISED: 12/17/98 JMM

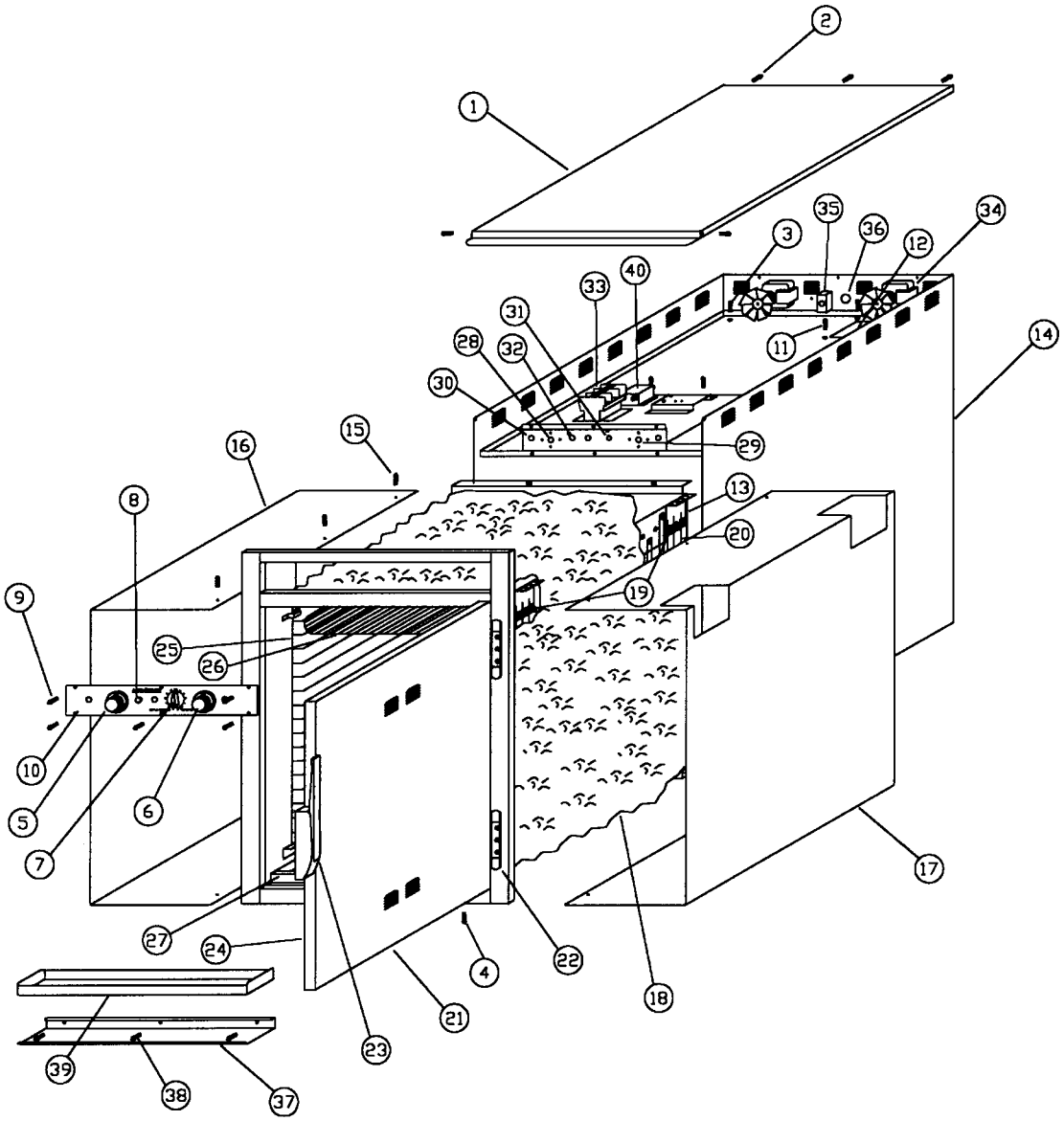

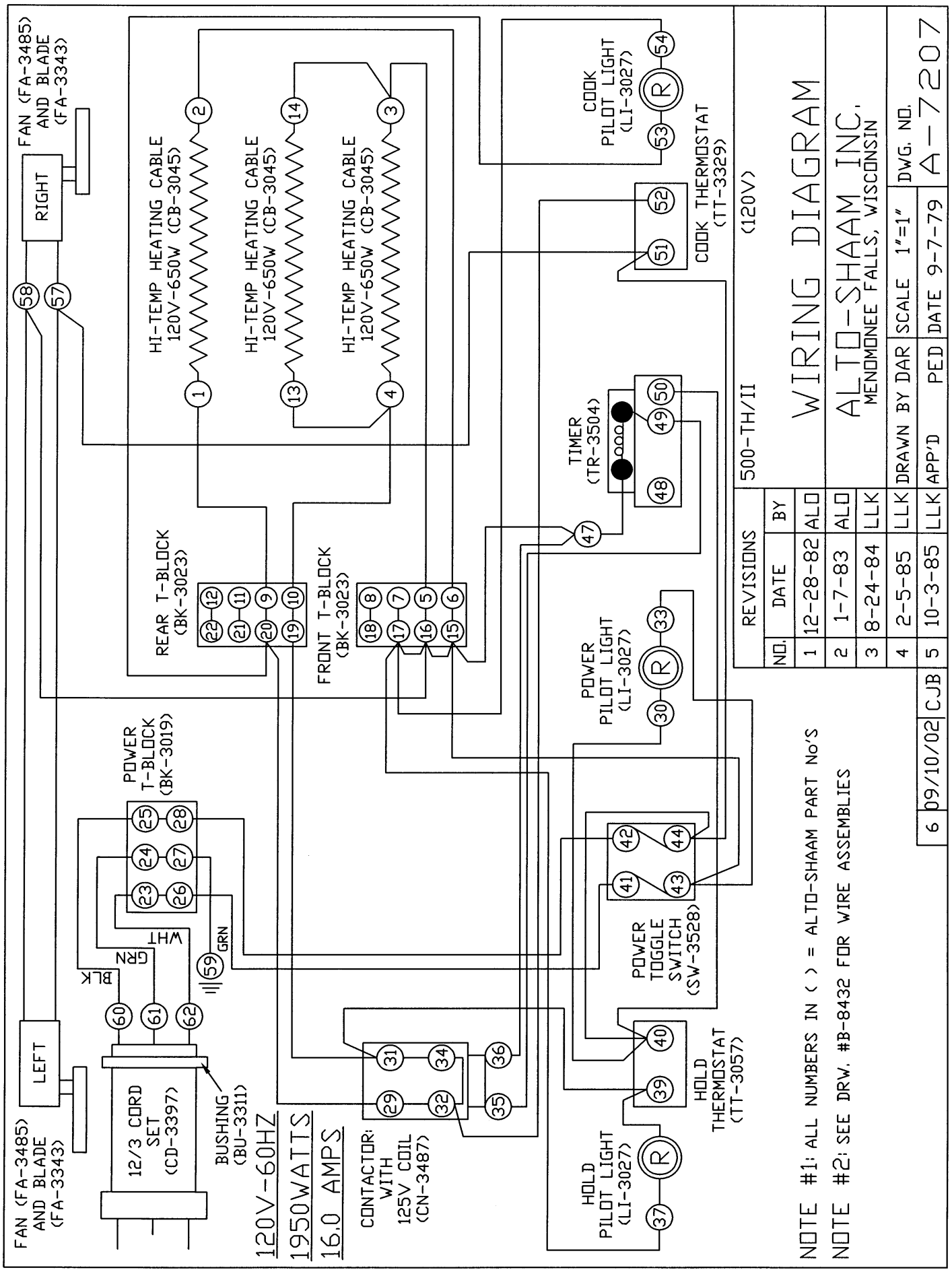
FAN (FA-3485) AND BLADE (FA-3343)
RIGHT
LEFT
HI-TEMP HEATING CABLE 120V-650W (CB-3045)
HI-TEMP HEATING CABLE 120V-650W (CB-3045)
HI-TEMP HEATING CABLE 120V-650W (CB-3045)
COOK PILOT LIGHT (LI-3027)
COOK THERMOSTAT (TT-3329)
(120V)
TIMER (TR-3504)
500-TH/II
WIRING DIAGRAM
ALTO-SHAAM INC.
MENOMONEE FALLS, WISCONSIN
REAR T-BLOCK (BK-3023)
FRONT T-BLOCK (BK-3023)
POWER PILOT LIGHT (LI-3027)
POWER T-BLOCK (BK-3019)
POWER TOGGLE SWITCH (SW-3528)
HOLD THERMOSTAT (TT-3057)
HOLD PILOT LIGHT (LI-3027)
12/3 CORD SET (CD-3397)
BUSHING (BU-3311)
CONTACTOR: WITH 125V COIL (CN-3487)
BLK
GRN
WHT
GRN
120V-60HZ
1950WATTS
16.0 AMPS
REVISIONS
NO. DATE BY
1 12-28-82 ALO
2 1-7-83 ALO
3 8-24-84 LLK
4 2-5-85 LLK
5 10-3-85 LLK
6 09/10/02 CJB
DRAWN BY DAR
APP'D PED
SCALE 1"=1"
DATE 9-7-79
DWG. NO. A-7207
NOTE #1: ALL NUMBERS IN ( ) = ALTO-SHAAM PART No'S
NOTE #2: SEE DRW. #B-8432 FOR WIRE ASSEMBLIES

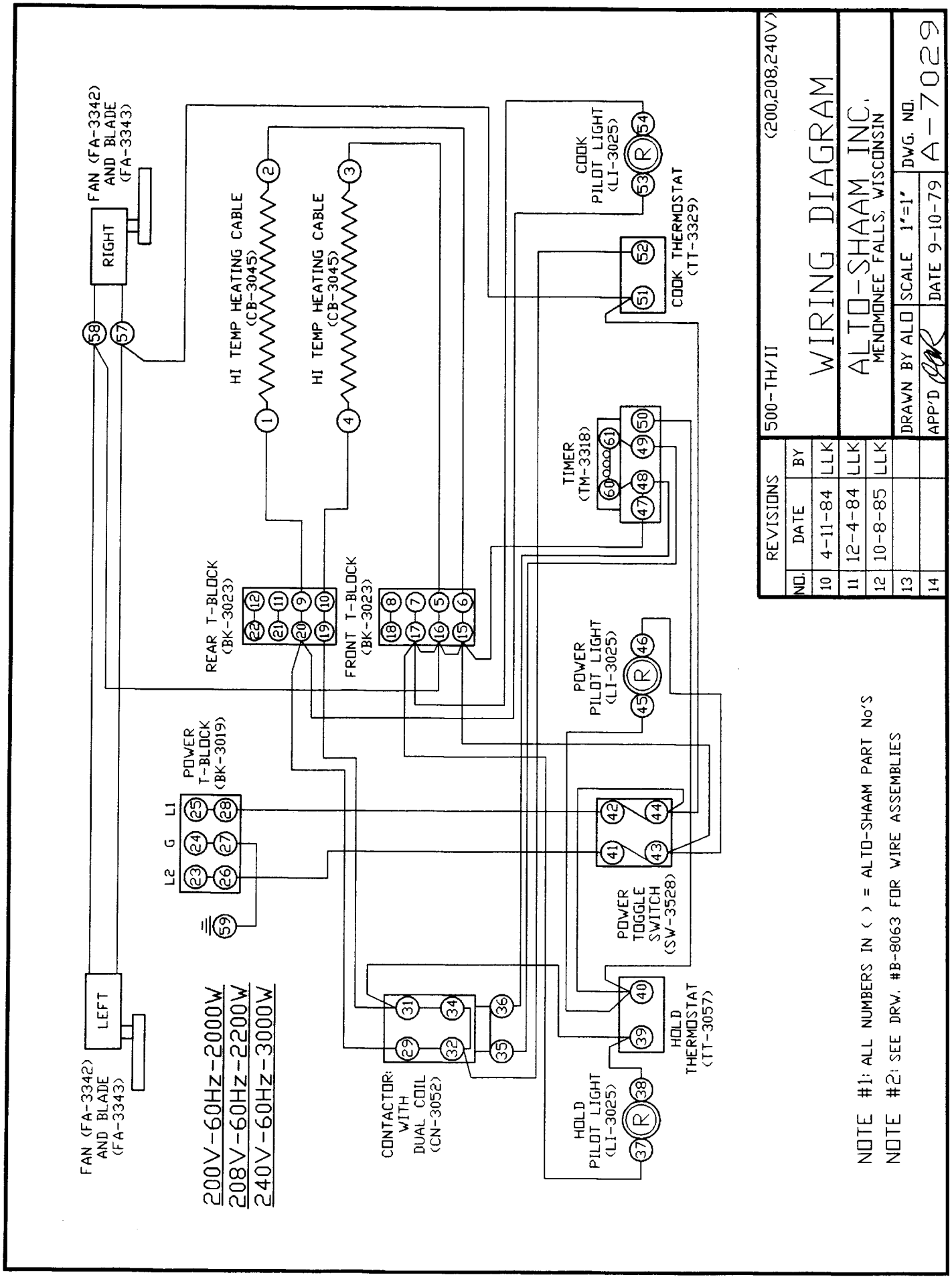
FAN (FA-3342) AND BLADE (FA-3343)
RIGHT
LEFT
HI TEMP HEATING CABLE (CB-3045)
HI TEMP HEATING CABLE (CB-3045)
COOK PILOT LIGHT (LI-3025)
COOK THERMOSTAT (TT-3329)
TIMER (TM-3318)
REAR T-BLOCK (BK-3023)
FRONT T-BLOCK (BK-3023)
POWER PILOT LIGHT (LI-3025)
POWER T-BLOCK (BK-3019)
L2 G L1
POWER TOGGLE SWITCH (SW-3528)
HOLD THERMOSTAT (TT-3057)
CONTACTOR WITH DUAL COIL (CN-3052)
HOLD PILOT LIGHT (LI-3025)
200V-60Hz-2000W
208V-60Hz-2200W
240V-60Hz-3000W
NOTE #1: ALL NUMBERS IN ( ) = ALTO-SHAAM PART No'S
NOTE #2: SEE DRW. #B-8063 FOR WIRE ASSEMBLIES
(200,208,240V)
500-TH/II
WIRING DIAGRAM
ALTO-SHAAM INC.
MENOMONEE FALLS, WISCONSIN
DRAWN BY ALO
SCALE 1"=1"
DWG. NO.
A-7029
APP'D
DATE 9-10-79
REVISIONS
NO. DATE BY
10 4-11-84 LLK
11 12-4-84 LLK
12 10-8-85 LLK
13
14

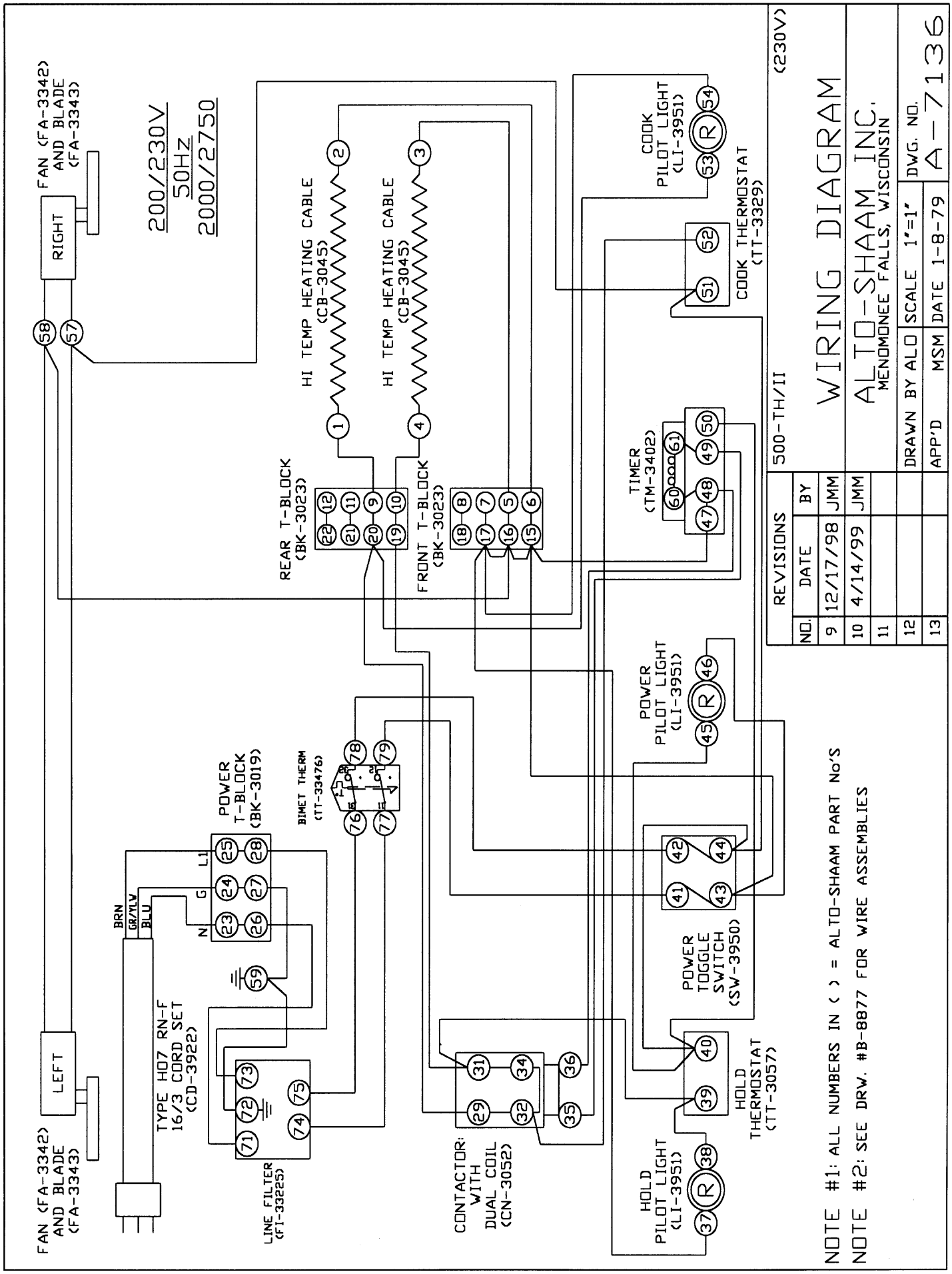
WIRING DIAGRAM
ALTO-SHAAM INC.
MENOMONEE FALLS, WISCONSIN
500-TH/II
(230V)
DRAWN BY ALO
APP'D MSM
SCALE 1"=1"
DATE 1-8-79
DWG. NO.
A-7136
REVISIONS
NO. DATE BY
9 12/17/98 JMM
10 4/14/99 JMM
11
12
13
200/230V
50Hz
2000/2750
FAN (FA-3342) AND BLADE (FA-3343)
RIGHT
LEFT
HI TEMP HEATING CABLE (CB-3045)
HI TEMP HEATING CABLE (CB-3045)
REAR T-BLOCK (BK-3023)
FRONT T-BLOCK (BK-3023)
COOK PILOT LIGHT (LI-3951)
COOK THERMOSTAT (TT-3329)
TIMER (TM-3402)
POWER PILOT LIGHT (LI-3951)
POWER T-BLOCK (BK-3019)
BIMET THERM (TT-33476)
POWER TOGGLE SWITCH (SW-3950)
HOLD THERMOSTAT (TT-3057)
HOLD PILOT LIGHT (LI-3951)
CONTACTOR WITH DUAL COIL (CN-3052)
LINE FILTER (FI-33225)
TYPE HO7 RN-F 16/3 CORD SET (CD-3922)
BRN
GR/YLW
BLU
L1
G
N
NOTE #1: ALL NUMBERS IN ( ) = ALTO-SHAAM PART No'S
NOTE #2: SEE DRW. #B-8877 FOR WIRE ASSEMBLIES

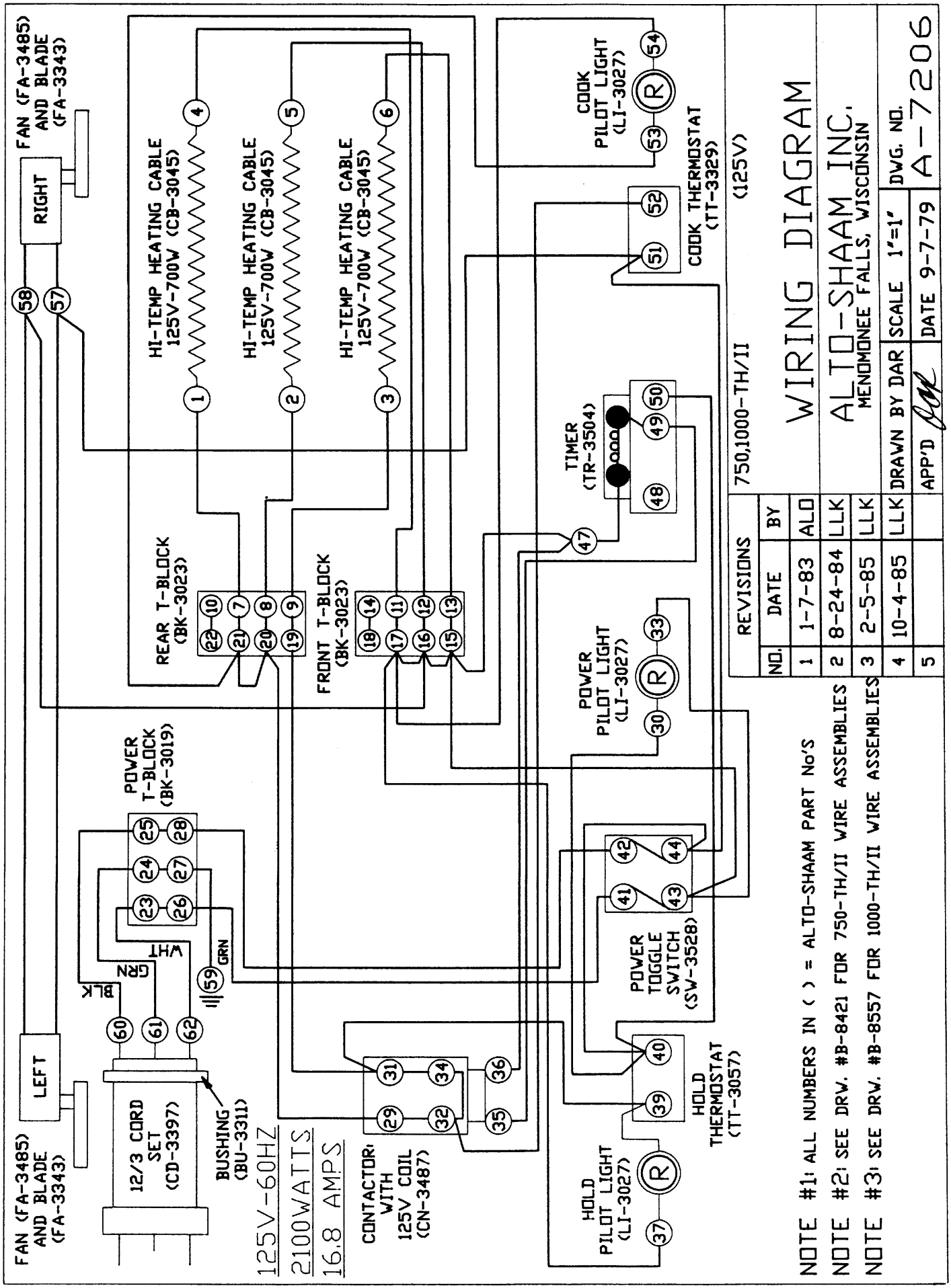
FAN (FA-3485) AND BLADE (FA-3343)
RIGHT
HI-TEMP HEATING CABLE 125V-700W (CB-3045)
HI-TEMP HEATING CABLE 125V-700W (CB-3045)
HI-TEMP HEATING CABLE 125V-700W (CB-3045)
COOK PILOT LIGHT (LI-3027)
COOK THERMOSTAT (TT-3329)
(125V)
750,1000-TH/II
WIRING DIAGRAM
ALTO-SHAAM INC.
MENOMONEE FALLS, WISCONSIN
DWG. NO.
A-7206
SCALE 1"=1"
DATE 9-7-79
DRAWN BY DAR
APP'D
REVISIONS
NO. DATE BY
1 1-7-83 ALO
2 8-24-84 LLK
3 2-5-85 LLK
4 10-4-85 LLK
5
TIMER (TR-3504)
REAR T-BLOCK (BK-3023)
FRONT T-BLOCK (BK-3023)
POWER PILOT LIGHT (LI-3027)
POWER T-BLOCK (BK-3019)
POWER TOGGLE SWITCH (SW-3528)
HOLD THERMOSTAT (TT-3057)
HOLD PILOT LIGHT (LI-3027)
CONTACTOR WITH 125V COIL (CN-3487)
12/3 CORD SET (CD-3397)
BUSHING (BU-3311)
LEFT
FAN (FA-3485) AND BLADE (FA-3343)
BLK
GRN
WHT
GRN
125V-60HZ
2100WATTS
16.8 AMPS
NOTE #1: ALL NUMBERS IN ( ) = ALTO-SHAAM PART No'S
NOTE #2: SEE DRW. #B-8421 FOR 750-TH/II WIRE ASSEMBLIES
NOTE #3: SEE DRW. #B-8557 FOR 1000-TH/II WIRE ASSEMBLIES

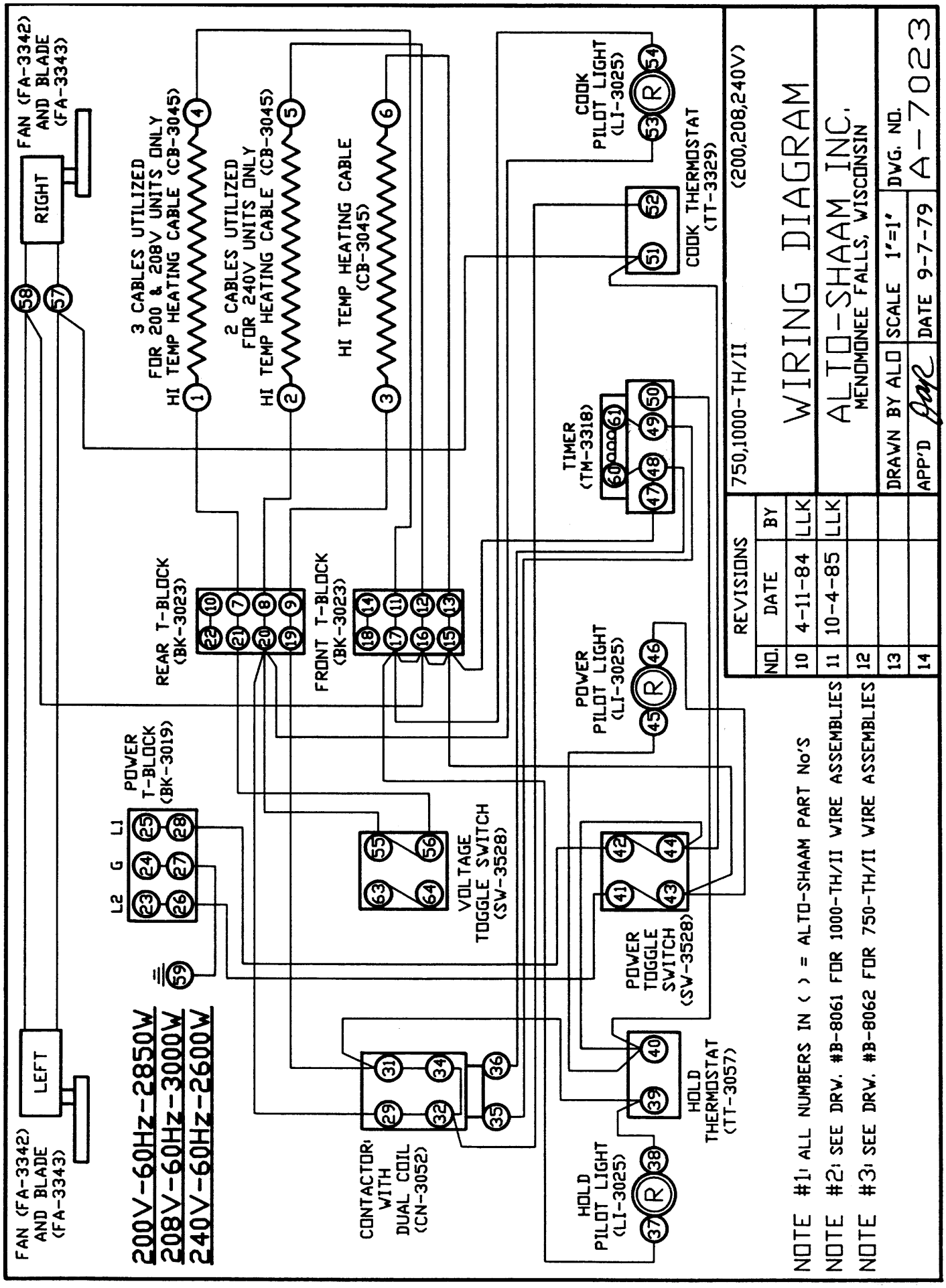
FAN (FA-3342) AND BLADE (FA-3343)
RIGHT
LEFT
3 CABLES UTILIZED FOR 200 & 208V UNITS ONLY HI TEMP HEATING CABLE (CB-3045)
2 CABLES UTILIZED FOR 240V UNITS ONLY HI TEMP HEATING CABLE (CB-3045)
HI TEMP HEATING CABLE (CB-3045)
COOK PILOT LIGHT (LI-3025)
COOK THERMOSTAT (TT-3329)
TIMER (TM-3318)
REAR T-BLOCK (BK-3023)
FRONT T-BLOCK (BK-3023)
POWER PILOT LIGHT (LI-3025)
POWER T-BLOCK (BK-3019)
L2 G L1
VOLTAGE TOGGLE SWITCH (SW-3528)
POWER TOGGLE SWITCH (SW-3528)
CONTACTOR, WITH DUAL COIL (CN-3052)
HOLD THERMOSTAT (TT-3057)
HOLD PILOT LIGHT (LI-3025)
200V-60Hz-2850W
208V-60Hz-3000W
240V-60Hz-2600W
750,1000-TH/II
(200,208,240V)
WIRING DIAGRAM
ALTO-SHAAM INC.
MENOMONEE FALLS, WISCONSIN
REVISIONS
NO. DATE BY
10 4-11-84 LLK
11 10-4-85 LLK
12
13
14
DRAWN BY ALO
APP'D
SCALE 1"=1"
DATE 9-7-79
DWG. NO.
A-7023
NOTE #1: ALL NUMBERS IN ( ) = ALTO-SHAAM PART No'S
NOTE #2: SEE DRW. #B-8061 FOR 1000-TH/II WIRE ASSEMBLIES
NOTE #3: SEE DRW. #B-8062 FOR 750-TH/II WIRE ASSEMBLIES

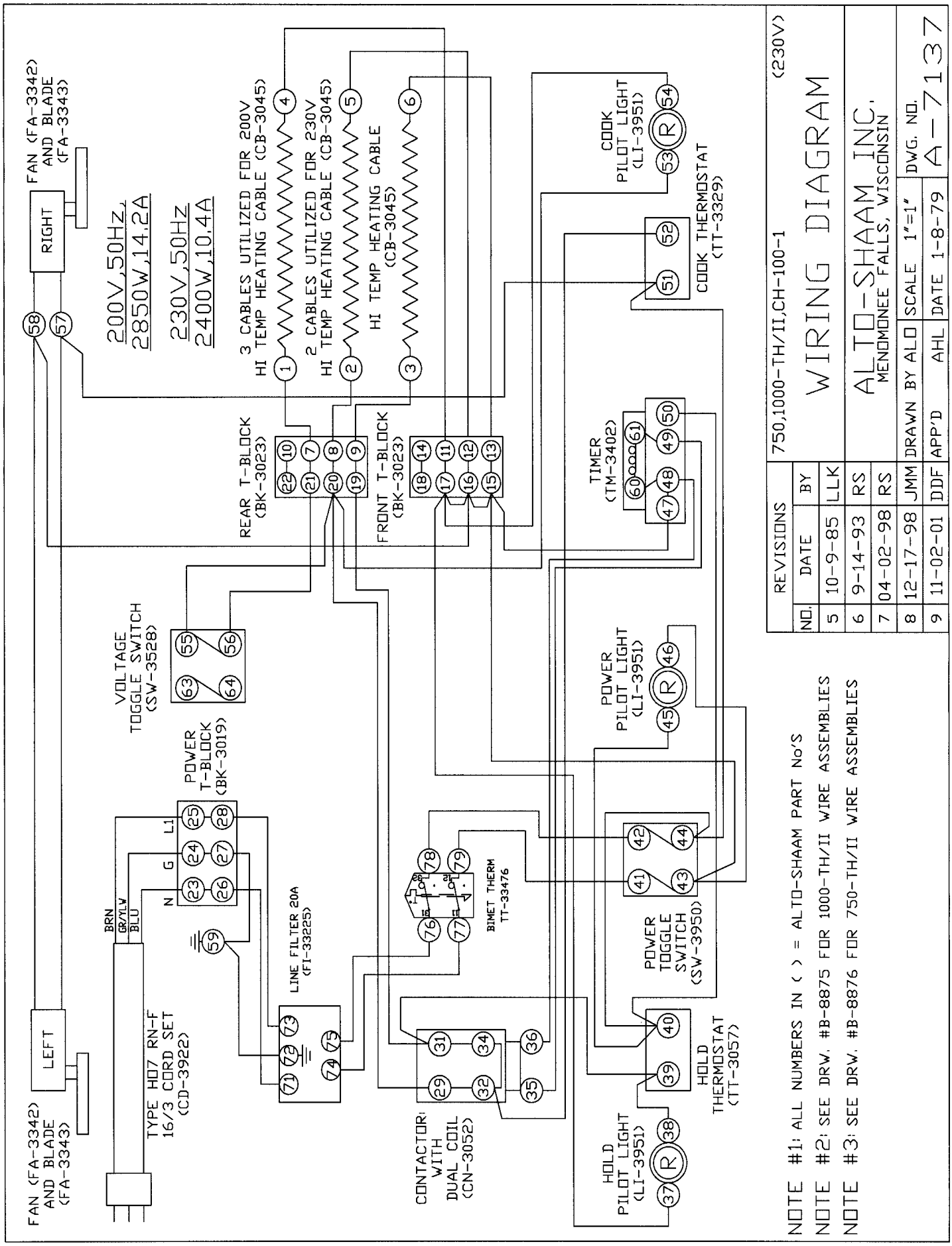
750,1000-TH/II,CH-100-1
(230V)
WIRING DIAGRAM
ALTO-SHAAM INC.
MENOMONEE FALLS, WISCONSIN
DRAWN BY ALO
SCALE 1"=1"
DWG. NO.
A-7137
DATE 1-8-79
APP'D AHL
REVISIONS
NO. DATE BY
5 10-9-85 LLK
6 9-14-93 RS
7 04-02-98 RS
8 12-17-98 JMM
9 11-02-01 DDF
FAN (FA-3342) AND BLADE (FA-3343)
RIGHT
LEFT
200V,50Hz, 2850W,14.2A
230V,50Hz 2400W,10.4A
3 CABLES UTILIZED FOR 200V HI TEMP HEATING CABLE (CB-3045)
2 CABLES UTILIZED FOR 230V HI TEMP HEATING CABLE (CB-3045)
HI TEMP HEATING CABLE (CB-3045)
REAR T-BLOCK (BK-3023)
FRONT T-BLOCK (BK-3023)
COOK PILOT LIGHT (LI-3951)
COOK THERMOSTAT (TT-3329)
TIMER (TM-3402)
POWER PILOT LIGHT (LI-3951)
VOLTAGE TOGGLE SWITCH (SW-3528)
POWER T-BLOCK (BK-3019)
L1
G
N
BRN
GR/YLW
BLU
TYPE HO7 RN-F 16/3 CORD SET (CD-3922)
LINE FILTER 20A (FI-33225)
BIMET THERM TT-33476
POWER TOGGLE SWITCH (SW-3950)
HOLD THERMOSTAT (TT-3057)
CONTACTOR, WITH DUAL COIL (CN-3052)
HOLD PILOT LIGHT (LI-3951)
NOTE #1: ALL NUMBERS IN ( ) = ALTO-SHAAM PART No'S
NOTE #2: SEE DRW. #B-8875 FOR 1000-TH/II WIRE ASSEMBLIES
NOTE #3: SEE DRW. #B-8876 FOR 750-TH/II WIRE ASSEMBLIES

TRANSPORTATION DAMAGE and CLAIMS

All Alto-Shaam equipment is sold F.O.B. shipping point, and when accepted by the carrier, such shipments become the property of the consignee.

Should damage occur in shipment, it is a matter between the carrier and the consignee. In such cases, the carrier is assumed to be responsible for the safe delivery of the merchandise, unless negligence can be established on the part of the shipper.

1. Make an immediate inspection while the equipment is still in the truck or immediately after it is moved to the receiving area. Do not wait until after the material is moved to a storage area.

2. Do not sign a delivery receipt or a freight bill until you have made a proper count and inspection of all merchandise received.

3. Note all damage to packages directly on the carrier's delivery receipt.

4. Make certain the driver signs this receipt. If he refuses to sign, make a notation of this refusal on the receipt.

5. If the driver refuses to allow inspection, write the following on the delivery receipt:
   Driver refuses to allow inspection of containers for visible damage.

6. Telephone the carrier's office immediately upon finding damage, and request an inspection. Mail a written confirmation of the time, date, and the person called.

7. Save any packages and packing material for further inspection by the carrier.

8. Promptly file a written claim with the carrier and attach copies of all supporting paperwork.

We will continue our policy of assisting our customers in collecting claims which have been properly filed and actively pursued. We cannot, however, file any damage claims for you, assume the responsibility of any claims, or accept deductions in payment for such claims.

ALTO SHAAM® LIMITED WARRANTY

Alto-Shaam, Inc. warrants to the original purchaser that any original part that is found to be defective in material or workmanship will, at Alto-Shaam's option, subject to provisions hereinafter stated, be replaced with a new or rebuilt part.

The labor warranty remains in effect one (1) year from installation or fifteen (15) months from the shipping date, whichever occurs first. Alto-Shaam will bear normal labor charges performed during standard business hours, and excluding overtime, holiday rates or any additional fees.

The parts warranty remains in effect for one (1) year from installation or fifteen (15) months from the shipping date, whichever occurs first.

However, the heating element on Halo Heat® cook/hold ovens and the refrigeration compressor on Alto-Shaam Quickchillers™ are warranted for a period of five (5) years from installation. The labor warranty is the same as stated above; namely, for one (1) year from installation or fifteen (15) months from the shipping date, whichever occurs first.

THIS WARRANTY DOES NOT APPLY TO:

1. Calibration.
2. Replacement of light bulbs and/or the replacement of display case glass due to damage of any kind.
3. Equipment damage caused by accident, shipping, improper installation or alteration.
4. Equipment used under conditions of abuse, misuse, carelessness or abnormal conditions including, but not limited to, equipment subjected to harsh or inappropriate chemicals including, but not limited to, compounds containing chloride or quaternary salts, poor water quality, or equipment with missing or altered serial numbers.
5. Damage incurred as a direct result of poor water quality, inadequate maintenance of steam generators and/or surfaces affected by water quality. Water quality and required maintenance of steam generating equipment is the responsibility of the owner/operator.
6. Damage caused by use of any cleaning agent other than Alto-Shaam's Combitherm® Cleaner including, but not limited to, damage due to chlorine or other harmful chemicals. Use of Alto-Shaam's Combitherm® Cleaner on Combitherm® ovens is highly recommended.
7. Any losses or damage resulting from malfunction, including loss of product or consequential or incidental damages of any kind.
8. Equipment modified in any manner from original model, substitution of parts other than factory authorized parts, removal of any parts including legs, or addition of any parts.

This warranty is exclusive and is in lieu of all other warranties, expressed or implied, including the implied warranties of merchantability and fitness for a particular purpose. In no event shall Alto-Shaam be liable for loss of use, loss of revenue or profit, or loss of product, or for any indirect or consequential damages. No person except an officer of Alto-Shaam, Inc. is authorized to modify this warranty or to incur on behalf of Alto-Shaam any other obligation or liability in connection with Alto-Shaam equipment.

ALTO-SHAAM, INC.

RECORD THE MODEL AND SERIAL NUMBER OF THE APPLIANCE FOR EASY REFERENCE.
ALWAYS REFER TO BOTH MODEL AND SERIAL NUMBER IN ANY CONTACT WITH ALTO-SHAAM REGARDING THIS APPLIANCE.

Model: _____ Date Installed: _____
Voltage: _____ Purchased From: _____
Serial Number: _____ _____

W164 N9221 Water Street • P.O. Box 450 • Menomonee Falls, Wisconsin 53052-0450 • U.S.A.
PHONE: 262.251.3800 • 800.558-8744 USA/CANADA FAX: 262.251.7067 • 800.329.8744 U.S.A. ONLY
WEBSITE: www.alto-shaam.com

PRINTED IN U.S.A.