OPERATING INSTRUCTIONS
MAINTENANCE INSTRUCTIONS
and
PARTS LIST

INTEGRITY

Brewing Systems

OWNER'S MANUAL

DUAL BREWERS WITH WARMING UNITS

COVERING

BREWER Model Nos. 8516 and 8518

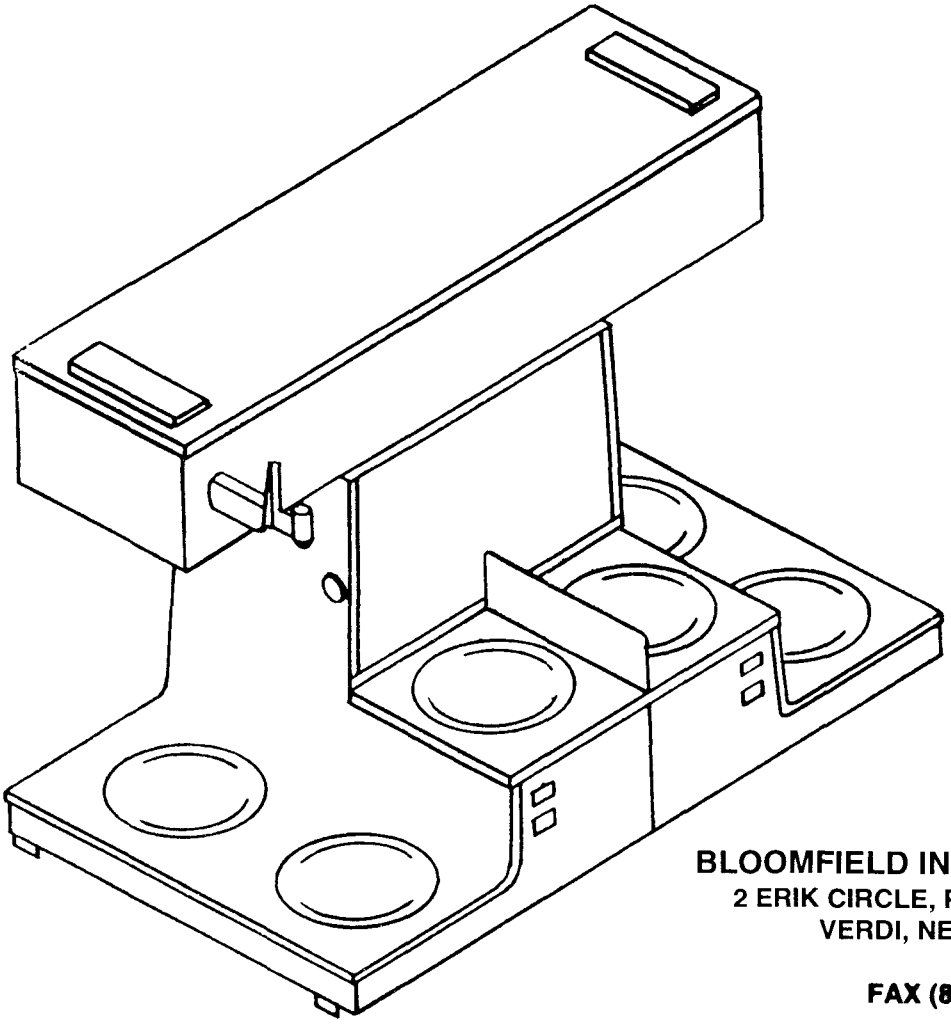

BLOOMFIELD INDUSTRIES
2 ERIK CIRCLE, P.O. BOX 280
VERDI, NEVADA 89439

FAX (800) 356-5142

70613
8516-M

INDEX

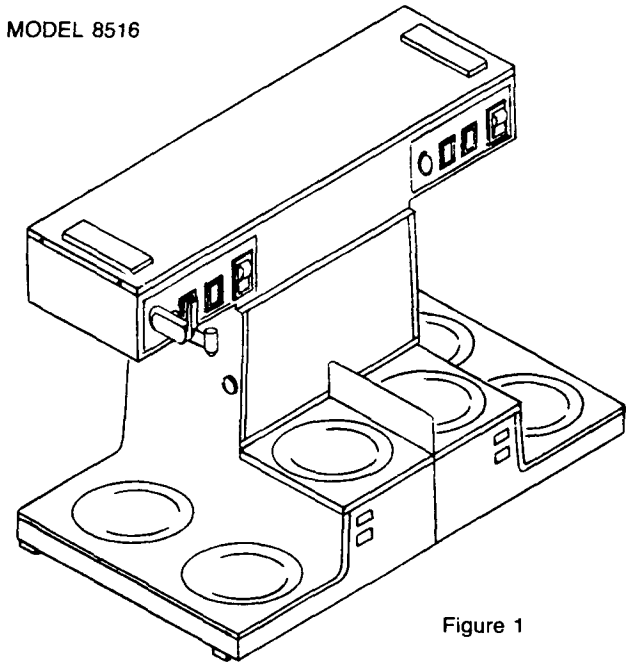

Figure 1

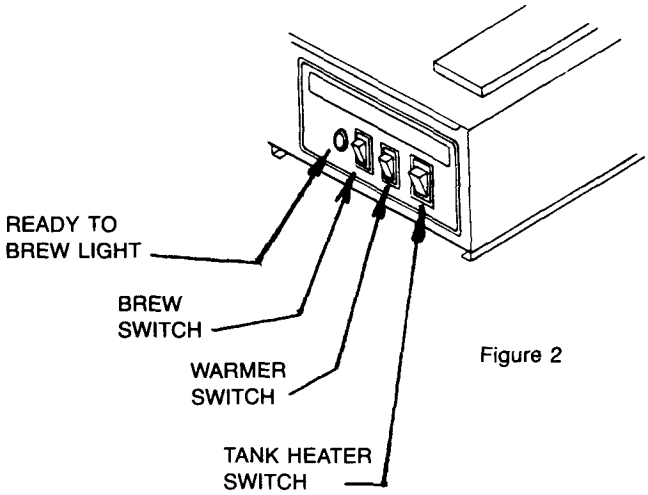

Figure 2

The INTEGRITY BREWERS have been designed with adjustment flexibility to cover a wide spectrum of customer needs. Adjustments on the running thermostat and inlet timer are simple adjustments easily accomplished by the purchaser, but **NOT COVERED UNDER ANY WARRANTY SERVICE AGREEMENT.**
Brewers must be installed in accordance with installation instructions in the owner's manual for the warranty to be valid.

WARNING:
DO NOT PLUG IN OR ENERGIZE THIS UNIT UNTIL INSTALLATION INSTRUCTIONS ARE READ AND FOLLOWED.

INTRODUCTION TO THE UNITS

There are two (2) styles of brewers covered in this manual.

The "front loading" MODEL 8516 is a unit that positions to the rear of the counter and is completely operated by store personnel. All operations such as brewing, keeping coffee warm, serving coffee and drawing of hot water are performed from the front of the unit.

A companion "rear loading" MODEL 8518 is a unit that may be positioned at the front of a counter. This unit differs from MODEL 8516, as the hot water faucet and the warmer stations remain at the front of the unit, while the brewing and control functions have been placed in the back of the brewer making operation of the unit easily available, and a step saver for store personnel.

MODEL 8516 and 8518 UNITS:

A. Both units have two (2) independent brewing sections in each brewer,

1. One brewing section has a water faucet for drawing cups of hot water while the other section is for brewing only.
2. In either unit, one brewing section can be used alone or both may be used at the same time.
3. Each unit has six (6) warmer stations for keeping decanters of coffee hot and available.
4. All Brew Chambers and Decanters are readily interchangeable between section to section of a brewer or from brewer to brewer.
5. Each brewing station of a unit requires a separate:
   a. Power source of 115/230 Volts, A.C., 60 Hertz, SINGLE PHASE, Four(4) Wire Supply capable of handling a 20 AMP load.

   b. Water input line connected to a single water source hose line of 3/8" minimum size.

PRE-INSTALLATION INSTRUCTIONS

GUIDE TO THE INITIAL INSTALLATION and TANK FILLING SEQUENCE.

1. Check the Tank Heater Switch in both brewing sections of the unit to be sure it is in the OFF position. They must remain OFF from Step 1 thru Step No. 9. A Tank Heater Switch controls the main heating element in each brewing section of the unit, and it must not be energized before the tank is filled with water, thru Step No. 5. The Tank Heater Switch also serves to de-energize the Brew Start Switch, preventing brew cycles of cold water while the Tank Heater Switch is in the OFF position.
2. Connect each brewing section of the unit to a power source, see Electrical Installation on Page 4.
3. Connect each brewing section of the unit to the water supply line, see instructions on Page 5.
4. Slide both Brew Chambers in place and SET AN EMPTY DECANTER UNDER EACH BREW CHAMBER.
5. Pour a full decanter of water thru the pour-in door on top of each brewing section of the unit. Wait two (2) minutes and repeat. Repeat a third time for the non-faucet brewing section of the unit. Water will start flowing into the decanter during the third cycle (second cycle from water faucet brewing section) indicating that the tank is filled with water.
6. After water flow stops, remove, empty and replace the decanter under each brew chamber.
7. Plug in both power cords to the source receptacles. Water should be connected to the unit and ready to go. Recheck and correct any leaks.
8. Turn on electric and water at source.
9. NOW — PRESS BOTH TANK HEATER SWITCHES TO ON position and leave them ON.
10. Proceed with initial Brew Cycle Set-up Instruction on Page 6, and then to Brewing of Coffee.

ELECTRICAL INSTALLATION for MODELS 8516 and 8518

IMPORTANT: Prior to starting the electrical hook-up, check power source and electrical receptacle for proper single phase voltage supply. Figure 3 details the power requirements of each brewing section of a unit.

CAUTION: DO NOT CONNECT TO A THREE (3) PHASE POWER SOURCE OR ANY OTHER THAN AS NOTED IN FIGURE 3, AS DAMAGES TO THE UNIT CAN OCCUR THAT ARE NOT THE RESPONSIBILITY OF THE MANUFACTURER OF THE UNIT

There are two (2) independent brewing sections in each unit, and each brewing section draws 20 AMPS of power. Each brewing section must be connected to a separate power source, capable of supplying:

115/230 Volts, A.C. 60 Hz., Single Phase, four (4) Wire, 20 AMP service.

For power line cord, use #12 gauge wire suitable for 75 degrees C. All wiring must be in accordance with local electrical codes.

1. Do not assume the GREEN earth ground wire can be used as a **neutral.** The GREEN earth ground is a protection circuit not intended as part of the power lines.
2. Recheck at this point — the tank heater and operation switch, on the front panel of each brewing section of the unit, must be in the OFF position.
3. To install power cords, remove rear and bottom cover panels of the unit for access to the power junction blocks. See Figure 3. A separate power cord must be wired into each junction block thru either the rear or thru the bottom opening. If bottom access is to be used, remove the two (2) snap-in Plug Buttons, and transfer them to the power cord entrance holes in the rear of the unit.
4. Recheck the Tank Heater Switch in each section — it must be in the OFF position. Plug in both power cords, check voltages at both terminal blocks to be certain each conforms to Figure 3 designations.

NOTE: At this point, unplug each power cord and go to Step 3 of Initial Installation Instruction Guide.

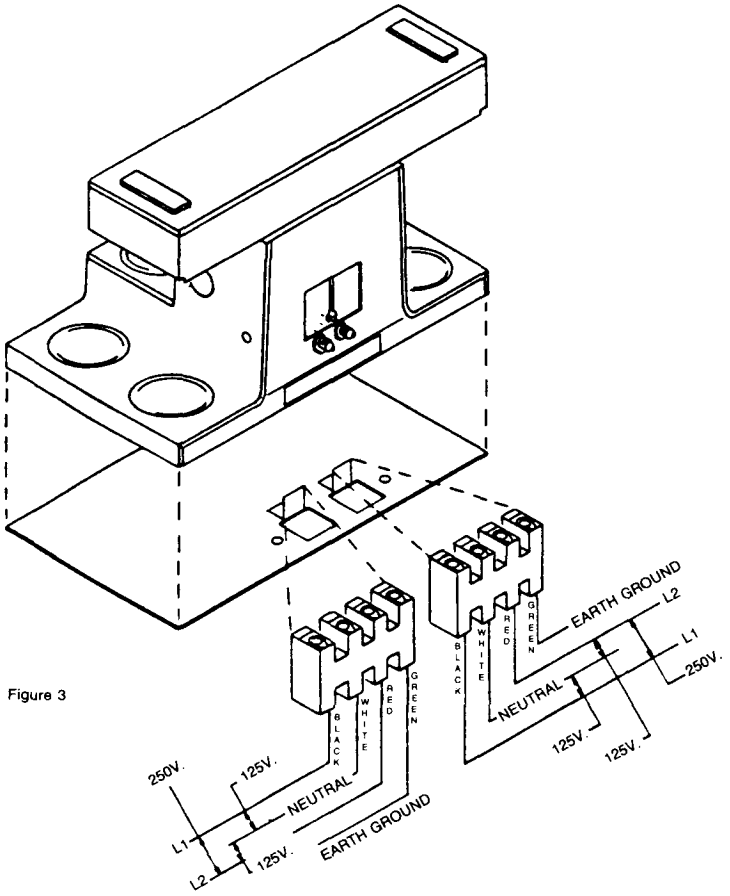

Figure 3

CONNECTING WATER SUPPLY LINE TO THE UNIT

Complete the electrical installation before starting the water connections.

WARNING:
DO NOT PLUG IN OR ENERGIZE THIS UNIT UNTIL INSTALLATION INSTRUCTIONS ARE READ AND FOLLOWED.

Before starting water hook-up, check to be sure both power cords of the unit are unplugged.

Unit must be installed on a water line with a flowing pressure between 20 PSI and 90 PSI. If water pressure does not fall into this range, or varies greatly a pressure regulator should be installed.

IMPORTANT: Flush the water line a minimum of three (3) minutes before connecting to the unit. The unit should be connected to COLD WATER.

Each brewing section connects to a short length of 1/4" O.D. tubing, preformed to go beneath the unit. Each preformed tube connects to a 1/4" Male Flare leg of a "TEE" fitting. The remaining leg of the "TEE" fitting is a 3/8" Male Flare that connects to a single 3/8" incoming water supply line, as shown in Figure 4.

After water hook-up is completed, continue to follow Pre-Installation Guide Instructions No. 4 thru 10.

Figure 4

CONNECTIONS NECESSARY TO EACH UNIT.

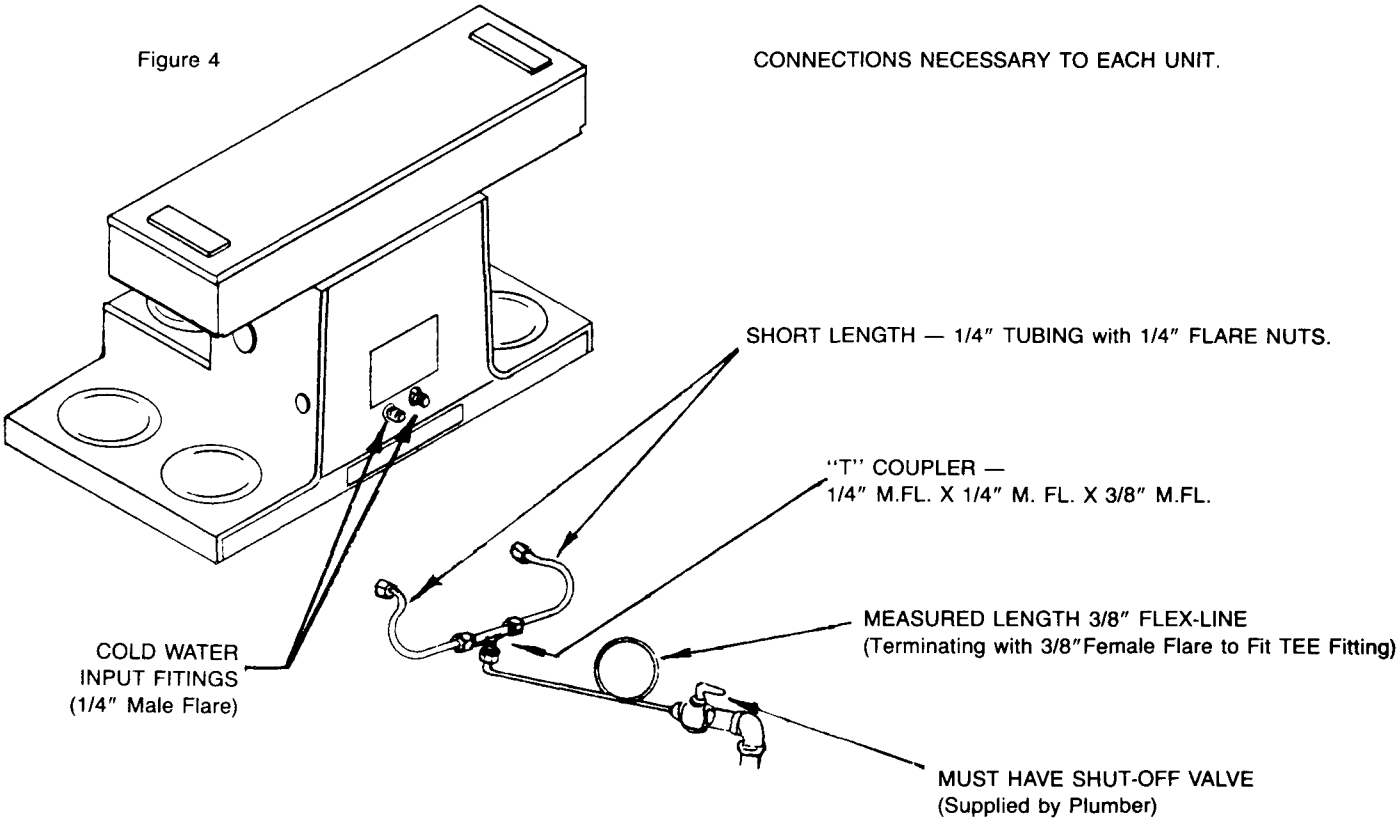

INITIAL BREWING CYCLE SET-UP and OPERATION GUIDE

1. Unit is now connected to power and water. Both water tanks have been filled. The Tank Heater Switch on each brewing section is in the ON position and the water is heating in both brewing sections.

2. On Water Faucet Section of each unit, draw off an ounce or two of water from the faucet, two or three times during the initial tank heating process, to relieve air and expansion pressure in the hot water faucet lines. This relieves "spitting with pressure," when a cup of hot water is drawn from a newly installed unit.

3. Initial heating time, at start up, will range from six (6) to eight (8) minutes. The GREEN signal light will turn ON when the water reaches brewing temperature.

4. When GREEN signal light turns ON, press brew start switch. Hot water will start to flow immediately and assure that the tank and system are full of water.

5. Repeat Step 4. After water stops flowing, you should have a full decanter of water — 60 ounces. In each brewing section, a water flow control valve and factory preset timer, control the exact amount of water to be delivered during each brewing cycle. If, after completing Step 4 the second time, the decanter is not full — 60 ounces of water, or tends to overflow, proceed as follows:

   A. Check water supply line flowing pressure. Brewer will not operate properly if the line pressure is below 20 PSI. (You may obtain your PSI pressure by inserting a gauge in the incoming water line at the back of the unit).

   B. Remove the 2" Plug Button from access hole in the cabinet front panels. Timer Knob and Face Plate are in clear view for easy adjustment.

   C. Turn Timer adjusting knob: The Timer is very sensitive, so make adjustments one (1) mark on the dial at a time. A one (1) mark change on the dial approximates three (3) ounces of water delivery change. The factory timer setting is 38 seconds when the unit is operated on a flow pressure of 35 PSI to receive a 60 ounce water delivery.

      1. Clockwise to INCREASE water volume, delivered during a brewing cycle or
      2. Counter-clockwise to DECREASE the delivery.

   D. Repeat Steps 4 and 5 until desired amount of water is dispensed during a brewing cycle.

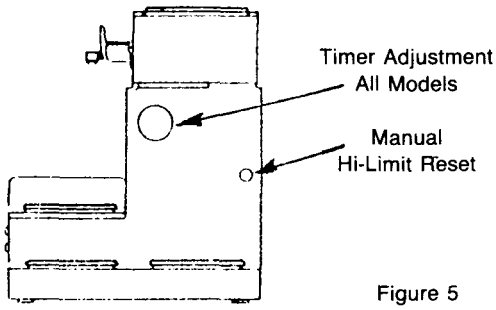

Figure 5

LEVELING THE UNIT

A very important installation operation that must not be overlooked or ignored, is the "Leveling of the Unit." For proper unit operation, it is very important that the unit be level when it is standing in its proper operating position.

After adjustment of both brew-sections is completed and the GREEN signal lights have turned ON, you are ready to brew coffee.

BREWING OF COFFEE

1. Remove brew chamber from under Spray Head and place one (1) Paper Filter into Brew Chamber. Add your choice of a premeasured package of FINE GRIND coffee. Shake Brew Chamber to level off coffee.

Figure 6

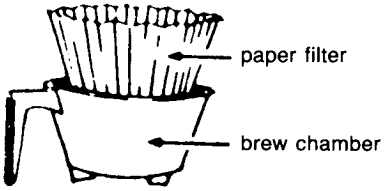

NOTE: Use 1-1/2 to 2-1/2 ounces to begin brewing. Then, if stronger coffee is desired, use more (to taste) of fine grind coffee. Slide Brew Chamber in place.

2. Place empty decanter under Brew Chamber.
   IMPORTANT: ALWAYS USE EMPTY DECANTER BEFORE STARTING A BREW CYCLE.

3. Press Brew Switch. Hot water will start spraying over coffee grounds in Brew Chamber and coffee will start filling the decanter. When coffee stops flowing, the freshly brewed coffee is completed. IMMEDIATELY remove Brew Chamber and discard paper filter and used grounds.
4. When GREEN signal light relights again, Brewer will be ready for another brewing cycle.

To keep your coffee warm, the Brewers are equipped with electric warmers which are activated by a switch. A Red signal light will glow, indicating WHICH warmer is ON.

IMPORTANT:
1. Warmers should be turned OFF when not in use.
2. Do not leave empty decanter on warmer that is ON.

SERVICING INSIDE THE UNIT

To expose the timer, high limit thermostat, switches and wiring, etc. inside a unit section, the front panel must be removed.

To Remove Front Panel:

A. Turn the two (2) pedestal warmer cover plates counter-clockwise to remove them.
B. Remove the two (2) screws and clips from each warmer well that holds the front panel in place.
C. Gently pull the front panel forward and lift it off exposing the unit inside.

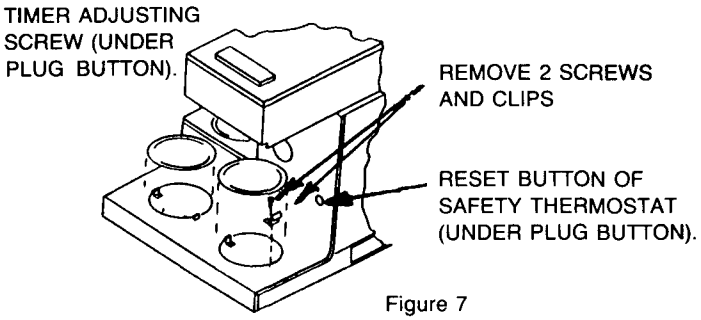

Figure 7

WATER FLOW DIAGRAM

PART I

Sequence of Operations:

WATER FLOW FOR BREWING OPERATION
(Both Brewing Sections)

1. Pushing brew Start Switch energizes the Timer. The Timer then energizes the Solenoid Valve, allowing water to flow into the Basin Pan and then into the Hot Water Tank. The length of time the Solenoid Valve is energized is controlled by the Timer setting.
2. The water entering the Hot Water Tank from the Basin Pan, flows to the bottom of the Tank through the Water Inlet Tube.
3. The addition of water into the bottom of the Hot Water Tank causes the hot water at the top of the Tank to flow out through the Outlet Elbow of the Tank Cover, to the Spray Head.

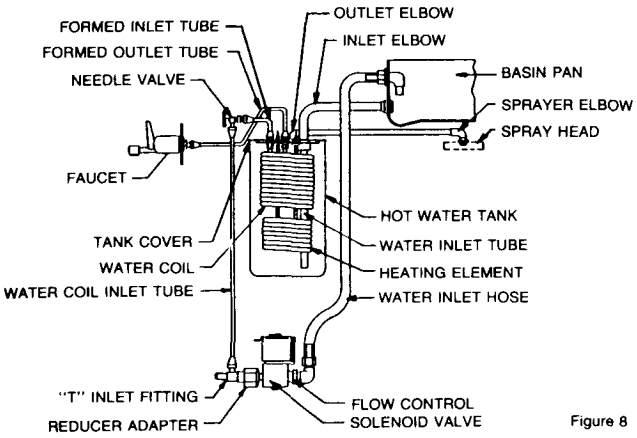

Figure 8

PART II

Sequence of Operations:

WATER FLOW FOR FAUCET OPERATION
(Faucet Section Only)

1. The incoming cold water supply connects to a "T" Inlet Fitting on the Unit. Water flows from the "T" Inlet Fitting through the Inlet Tube, Needle Valve and Formed Inlet Tube into the input connection of the Water Coil.
2. The Water Coil is submerged in the Hot Water Tank and draws heat from the surrounding hot water. Water flowing into the Water Coil is then heated and flows out through the Formed Outlet Tube to the Faucet. (The water flowing through the Water Coil, which feeds the Faucet is **not** controlled by the Solenoid Valve. This portion of the system is always under pressure and is controlled by the Faucet. Opening the Faucet allows the water to flow through the Water Coil system.)
3. The Needle Valve, in the system, controls the volume of flow from the Faucet and is adjusted to allow a gentle stream of water to be dispensed through the Faucet, without splashing into the cup. (The Faucet is intended as a cup to cup hot water supply.)

NOTE: Drawing hot water from the Faucet, during a Brewing Cycle **does not** affect the volume of the finished brew.

EXPLODED VIEW
for
MODEL NOS. 8516 and 8518

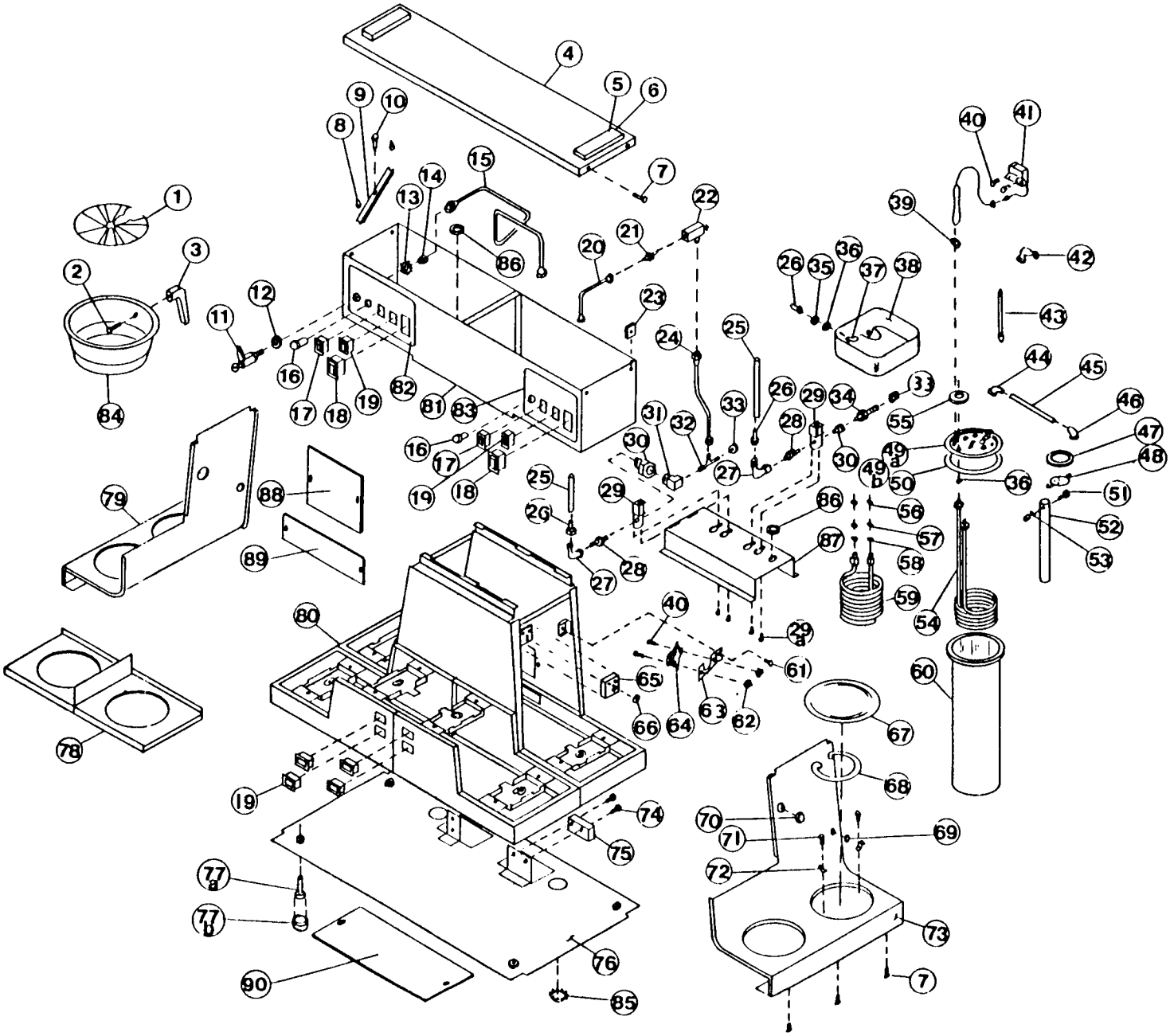

Figure 9

REPLACEMENT PARTS LIST — MODELS 8516 and 8518

NOTE: FACING THE OPERATOR CONTROLS, DETERMINES LEFT OR RIGHT BREWER DESIGNATION.

EXPL. VIEW REF.	PART	DESCRIPTION	QTY. PER UNIT	MODEL USED ON	
				8516 BREWER LEFT/RIGHT	8518 BREWER LEFT/RIGHT
1	8707-4	Filter Support Frame	2	L& R	L & R
2	8707-3	Screw, #10-32x5/16 Hex Hd.	2	L & R	L & R
3	8707-2	Bakelite Handle, Black	2	L & R	L & R
4	8516-131	Basin Cover, Sub-Assembly	1	Common	Common
5	8543-46	Hinge Cover	2	L & R	L & R
6	8543-49	Hinge Cover Wire	2	L& R	L & R
7	8543-52	Screw, #8-3/8" Ph. Hd. "B"	30	L & R	L & R
8	8043-506	#8-32 Hex Cap Nut	4	L & R	L & R
9	8043-5	Hold Down Strap	2	L & R	L & R
10	8043-47	Screw, Ph. Hd. #10-32x1"	2	L & R	L & R
11	8551-250	Faucet Assembly, includes #12, #13, and #14	1	L	R
12	8551-100A	Washer	1	L	R
13	8551-100B	Ext. Toothed Lockwasher 7/16	1	L	R
14	8551-100C	Hex Lock Nut	1	L	R
15	8516-130	Formed Outlet Tube, to Faucet	1	L	R
16	8718-31	Green Pilot Light	2	L & R	L & R
17	8707-28	Brew Start Switch	2	L & R	L & R
18	8516-25	Main Switch-Lighted Style Series	2	L & R	L & R
19	6710-23	ON/OFF Lighted Switch, Black	6	L & R	L & R
20	8540-4	Formed Inlet Tube Assy., to Input.	1	L	R
21	8551-30	1/4" M. Flare to 1/8" FPT Connector	1	L	R
22	8514-26	Needle Valve	1	L	R
23	8543-23	Tinnerman Nut	30	L & R	L & R
24	8516-136	Formed Tube Assy., to Needle Valve	1	L	R
25	8516-142	Water Inlet Hose	2	L & R	L & R
26	8941-20	Adaptor Fitting	4	L & R	L & R
27	8541-48A	1/4" M. Flare x 1/4" FPT Elbow	2	L & R	L & R
28	8541-120F	Flow Control, 1/4" MPT x 1/4" MPT	2	L & R	L & R
29	8541-120	Solenoid Valve, incl. #28	2	L & R	L & R
29A	D 20002-3	Screw, #10-32 x 5/16"	4	L & R	L & R
30	8706-102	Reducer Adaptor 1/8 M x 3/8 FPT	2	L & R	L & R
31	8516-102	Street Elbow 3/8 P.T.	1	L	R
32	8551-35	"T" Fitting 2 x 1/4" M. Flare x 3/8 MPT	1	L	R
33	8710-10	Hex Nut, 7/16-20 x 1/8"	2	L & R	L & R
34	8541-93	Inlet Fitting 1/4" M. Flare x 3/8 MPT	1	R	L
35	8881-8	Washer	2	L & R	L & R
36	8043-30	Gasket	6	L & R	L & R
37	8873-12	M. Elbow 1/4" Pipe x 1/4" M. Flare	2	L & R	L & R
38	8541-21	Basin Pan	2	L & R	L & R
39	8512-41	Seal Washer	2	L & R	L & R
40	3-100	#6-32 x 1/4" Rd. Hd. Screw	4	L & R	L & R
41	8512-51	Thermostat	2	L & R	L & R

REPLACEMENT PARTS LIST — MODELS 8516 and 8518

NOTE: FACING THE OPERATOR CONTROLS. DETERMINES LEFT OR RIGHT BREWER DESIGNATION.

EXPL. VIEW REF.	PART	DESCRIPTION	QTY. PER UNIT	MODEL USED ON	
				8516 BREWER LEFT/RIGHT	8518 BREWER LEFT/RIGHT
42	8043-8	Inlet Elbow	2	L & R	L & R
43	8043-15	Vent Tube	2	L & R	L & R
44	8043-11	Outlet Elbow	2	L & R	L & R
45	8043-26	Water Outlet Tube	2	L & R	L & R
46	8043-13	Sprayer Elbow	2	L & R	L & R
47	8543-42	Sprayhead Gasket	2	L& R	L & R
48	8543-44	Sprayer Disc	2	L & R	L & R
49A	8514-68	Tank Cover Plate ONLY, Watercoil Style	1	L	R
49B	8552-180	Tank Cover Plate ONLY, Non-Watercoil	1	R	L
50	8043-12	Tank Cover Gasket	2	L & R	L & R
51	8543-73	#4-40 x 1-1/2" Pan Hd. Screw	2	L & R	L & R
52	8043-24	Water Inlet Tube	2	L & R	L & R
53	8543-74	#4-40 Hex Nut	2	L & R	L & R
54	8716-1	Heat'g Element 3500W, 230 V	2	L & R	L & R
55	8043-28	1/2-20 Hex Nut	4	L & R	L & R
56	8941-21	7/16-20 Hex Nut 1/8" thick	2	L	R
57	8942-33	Seal Gasket	2	L	R
58	8551-53	7/16" I.D. x 3/4" O.D. Stainless Steel Washer	2	L	R
59	8540-6	Hot Water Coil	1	L	R
60	8043-10	Tank Body	2	L & R	L & R
61	7200-6X	#8-32 x 5/16" Screw	2	L & R	L & R
62	8861-16	#6-32 Hex Nut	4	L & R	L & R
63	8718-48	Hi-Limit Bracket	2	L & R	L & R
64	8552-50	Safety Thermostat	2	L & R	L & R
65	8718-1	Timer w/Knob & Dial — 2 min.	2	L & R	L & R
66	8718-1 A	Timer Knob	2	L & R	L & R
67	8700-16	Warmer Cover Plate, Black	6	L & R	L & R
68	8572-18	Calrod Warmer Element, 100W, 120V.	6	L & R	L & R
69	8033-60	Dot Plug Button, 3/8" Diameter	2	L & R	L & R
70	8706-75	Plug Button, 2" Diameter	2	L & R	L & R
71	7506-30	#8-32 x 3/8" Thread Cutting Screw	8	L & R	L & R
72	8543-80	Front Panel Mount'g Clips	8	L & R	L & R
73	8516-101	Front Panel	1	R	L
74	616-5	#6-32 x 1-1/4" Rd. Hd. Screw	4	L & R	L & R
75	8552-18	Terminal Block	2	L & R	L & R
76	8516-116	Bottom Plate	1	Common	Common
77A	8033-55	Leveler Leg	4	L & R	L & R
77B	8033-56	Leveler Leg Cap	4	L & R	L & R
78	8516-119	Warmer Top Assembly	1	Common	Common
79	8516-100	Front Panel	1	L	
80A	8516-105	Body Assembly	1	Common	Common
81A	8516-122	Basin Sub-Assembly	1	Common	—
81B	8518-102	Basin Sub-Assembly	1	—	Common

REPLACEMENT PARTS LIST — MODELS 8516 and 8518

NOTE: FACING THE OPERATOR CONTROLS, DETERMINES LEFT OR RIGHT BREWER DESIGNATION.

EXPL. VIEW REF.	PART	DESCRIPTION	QTY. PER UNIT	MODEL USED ON	
				8516 BREWER LEFT/RIGHT	8518 BREWER LEFT/RIGHT
82	8518-3	Front Label w/Faucet Hole	1	L	-
83	8516-2	Front Label without Faucet Hole	1	R	L & R
84	8707-160	Brew Chamber Cup ONLY	2	L & R	L & R
	8707-6	Complete Brew Chamber, includes #1, #2, #3, and #84	2	L & R	L & R
85	8705-36	Plug Button, 7/8" Diameter	2	L & R	L & R
86	8543-69	Heyco Bushing	8	L & R	L & R
87	8516-107	Tank Support Bracket	1	Common	Common
88	8516-134	Solenoid Access Door	1	Common	Common
89	8516-133	Access Door, Wiring	1	Common	Common
90	8516-135	Bottom Access Door, Wiring	1	Common	Common

OPTIONAL ACCESSORIES (not shown)

8541-120JS	Solenoid Repair Kit
8551-275	Faucet Repair Kit
8544	4" Leg Kit (Set of 4)
8707-6	Complete Brew Chamber Assembly, w/wire rack
8717-300	Complete Tank Lid Assembly, w/AII Components mounted onto it, FOR NON-FAUCET STYLE BREWER SECTION.
8716-300	Complete Tank Lid Assembly, w/AII Components mounted onto it, FOR FAUCET STYLE BREWER SECTION.
—	Connector Kit — to attach both Brewing Sections of a Unit to a Single 3/8" Cold Water Source, FLEX-LINE. (For Unit without 4" legs).
—	Connector Kit — to attach both Brewing Sections of a Unit, to a Single 3/8" Cold Water Source FLEX-LINE (For under the Unit Coupling, Unit stands on 4" legs).

TROUBLESHOOTING GUIDE

It is very important, when servicing equipment, to:

1. Define the basic Problem.
2. Isolate the Probable Cause.
3. Take Corrective Action regarding those items hampering proper operation of the equipment.

It is usually relatively easy to define the basic problem, but sometimes very difficult to pinpoint the precise cause.

A TROUBLESHOOTING GUIDE is provided in this chapter to suggest probable causes and corrective actions for each. Obviously, if the cause is not isolated and corrected, proper operation of the equipment cannot be restored.

Should the problem remain after exhausting the troubleshooting steps suggested, refer to the Order/ Service Information section of this chapter.

WARNING: Inspection, testing and repair of electrical equipment should be performed only by qualified service personnel. The brewer should be unplugged when servicing, except when electrical tests are required.

DANGER: Use extreme care during electrical circuit tests. Live circuits will be exposed.

PROBLEM	PROBABLE CAUSE	CORRECTIVE ACTION
1. Unit electrically dead. No power in unit or at terminal block.	A. Power Cord.	1. Power cord not plugged into source — plug in power cord.
	B. Source Circuit Breaker or Fuse.	1. Blown fuse or circuit breaker tripped, reset breaker or replace blown fuse.
	C. Source receptacle miswired.	1. Check receptacle for proper power distribution at terminals.
2. Unit has power but will not start a cycle.	A. Unit connected to wrong power source.	1. Check power source — correct wire hookup — must be A.C., 120Volt/208 to 240Volt, Single Phase.
	B. Loose wire or connection.	1. Check for loose wire or connection. Reattach loose wire or tighten connection,
	C. Main Switch.	1. Switch is in OFF position — turn ON. 2. Electrically open — replace. 3. Switchbutton stuck — replace.
	D. Brew "START" Switch.	1. Check switch continuity, if switch does not make and break when activated — replace.
3. Unit has power but will operate only while "Brew Button," is held in contact. Cycle stops when button is released.	A. Loose wires.	1. Timer not being energized due to a loose wire — reattach wire.
	B. Timer.	1. Timer blown due to hookup to wrong power — correct power supply — replace timer. 2. Timer defective — replace.
4. Unit operates but blows fuses or trips circuit breaker.	A. Under rated fuses or circuit breakers.	1. Each unit must operate on a separate 20 AMP power line. 15 AMP fusing will not operate — replace fuses or circuit breakers, use 20 AMP rated line protectors.

PROBLEM	PROBABLE CAUSE	CORRECTIVE ACTION
4. Unit operates but blows fuses or trips circuit breaker.	B. Too heavy a load on the line. (Excessive demand).	1. Other appliances added onto same power line. Remove extra appliances, each brewer requires a 20 AMP power line
5. Unit activates but no water flows into the basin pan or from the faucet.	A. Water Supply.	1. Water supply line valve shut off — turn on.
	B. Line filter such as QC7 and/or strainer.	1. Water line filter plugged up — replace filter. 2. Strainer plugged up — back flush or replace.
	C. Restricted water line.	1. Water line to unit plugged — clear blockage or replace line. 2. Kink in water line — straighten the line or replace line section 3. Water line in cold area, water frozen in the line — warm up the line so water flows freely,
6. Unit activates but no water flows into basin pan. Water does flow from the faucet.	A. Loose Wire.	1. Locate loose wire and attach.
	B. Solenoid Valve (not opening).	1. Solenoid valve coil electrically open — replace coil. 2. Foreign material in solenoid — clean inside of solenoid valve. 3. Shut off piston seat or spring damaged — replace both or complete solenoid.
	C. Twisted or Kinked Hose (from solenoid to basin pan).	1. Relieve twist or kink in hose — reposition on basin pan fitting.
7. Too little water or too much water. (Decanter short or overflows)	A. Strainer or water filter cartridge is clogged.	1. Back flush strainer or replace. 2. Replace water filter cartridge.
	B. Timer Adjustment (Timer needs to be adjusted).	1. To receive a full decanter, adjust the timer to run a shorter or longer time cycle. To increase water volume, turn timer knob clockwise for a longer cycle time, or counter-clockwise to reduce the water dump cycle time. NOTE: At 35 PSI water flow, into the unit, a change of three (3) ounces in delivery occurs with each movement of the timer knob One (1) mark on the dial face. 2. Check timer cycle with a stop watch, if cycle time is irregular — change timer.
	C. Flow Restricter in Output End of Water Solenoid Valve. (Dirty, missing, damaged or inoperative)	1. Particles of foreign material may partially or completely clog the orifice of the flow restricter. Clean or replace flow regulator or change complete solenoid valve assembly.

PROBLEM	PROBABLE CAUSE	CORRECTIVE ACTION
7. Too little water or too much water. (Decanter short or overflows)	D. Water Pressure Variations (Water pressure rises above 85 PSI or falls below 20 PSI.)	1. All automatic brewers require a constant water pressure between 20 PSI and 85 PSI for consistent [rouble-free operation. Wide varying water pressures lead to erratic delivery. A pressure regulator may be needed to stabilize high or fluctuating running pressures. A water source that falls below 20 PSI may result in short pots or erratic water volume delivery.
	E. Decanter — 1) Wrong Size 2) Starting with some liquid in decanter. 3) Correct decanter used but second brew cycle initiated before first run off is completed.	1. Customer using a foreign decanter too small to hold volume of liquid being delivered or vice-versa — use correct decanter. 2. Start with an empty decanter every cycle, as any coffee left in decanter will cause overflow. 3. Water flow into basin pan takes approximately 38 seconds but the run, thru the coffee to complete a brew, takes 3 to 3-1/2 minutes, therefore a second brew cycle must not be started until the first cycle has been completed.
8. Water keeps running into Basin Pan. (Will not shut off with Power Cord unplugged)	A. Water Solenoid Valve (Plunger stuck open)	1. Check and clean inside of water solenoid valve and plunger. 2. Check inside surface of water solenoid valve port. If it is scored, chipped or damaged, replace the complete solenoid valve. 3. Check plunger seat surface if worn or damaged, replace the plunger and spring or replace complete solenoid valve.
9. Water keeps running into Basin Pan. (Water flow stops when Power Cord is unplugged.)	A. Brew "START SWITCH"	1. Check brew switch for operation. If switch does not make and break contact, replace switch
	B. Timer	1. Check timer for TIME CYCLE operation. If timer does not cycle to OFF condition and brew "Start Switch" is good, replace timer.
	C. Shorted Wiring (Wires from start switch shorted together).	1. Locate and remove the contact — replace wire where necessary.
10. Water keeps running or dripping from Spray Disc (Solenoid Valve not leaking into Basin Pan).	A. Tank Temperature (Set too high).	1. Adjust thermostat to lower temperature. Tank temperature should be between 195 and 204 degrees F. To decrease tank temperature, turn the thermostat adjusting shaft counter-clockwise. NOTE: A 10 degree turn of thermostat shaft is equal to a 4 degree F temperature change in the water. Always run 2 or 3 cycles to climatize water temperature and new thermostat setting.

PROBLEM	PROBABLE CAUSE	CORRECTIVE ACTION
10. Water keeps running or dripping from Spray Disc (Solenoid Valve not leaking into Basin Pan).	B. Hot Water Coil leaking. (Faucet side only)	1. Shut off needle valve controlling water to Hot Water Coil. If running or dripping from Spray Disc stops, replace Hot Water Coil.
11. Water fails to heat, but Brewer does operate. Water is cold.	A. Loose Wire.	1. Check for loose connection — locate and reattach.
	B. Thermostat adjustment. (Ready Light is ON)	1. Thermostat adjustment shaft turned down. Turn thermostat shaft clockwise to the stop, Ready Light must go out indicating thermostat is calling for heat. If Ready Light does not go out — replace thermostat. 2. If Ready Light does go out, allow water to heat and then adjust thermostat for a water temperature between 190 to 200 degrees F, as it exits directly under the Brew Chamber, taking it about one (1) minute into the cycle.
	C. Tank Heater	1. Check for voltage at Tank Heater Terminals. Voltage should be between 208 Volts and 240 Volts, depending on source. If voltage is present — replace element. 2. If voltage is not present on element terminals, check Items 11 A, 11B and 11D.
	D. Source Fuse or Circuit Breaker.	1. One (1) fuse or circuit breaker is open, not completing the Heater Element circuit — change fuse or activate circuit breaker.
12. Ready Light fails to glow when water reaches brewing temperature.	A. Ready Light	1. Check for disconnected wire — locate and reconnect. 2. If thermostat cycles ON and OFF and Ready Light does not glow — replace ready light.
13. Water heats but does not get hot enough.	A. Thermostat. (Out of adjustment, Ready Light does come ON)	1. Temperature of water out of the brew chamber must be 190 to 200 degrees F. Turn thermostat shaft clockwise to increase the water temperature or counter-clockwise to decrease the temperature. A 10 degree turn of the thermostat shaft makes a 4 degree F water temperature change. 2. If thermostat shaft is turned clockwise to the stop and temperature is still too low — replace thermostat.

PROBLEM	PROBABLE CAUSE	CORRECTIVE ACTION
14. Water heats, but takes a long time. (Slow Recovery)	A. High Lime Deposits.	1. Delime unit. (Consult a qualified service technician.)
	B. Low Voltage at Source.	1. Check voltage at receptacle and at heater element terminals. It should be within 10% of unit rating plate. If a low voltage condition exists, an electrician should be consulted. A low voltage condition can and does cause frequent service calls, as well as extending the water heating time.
15. Water Temperature TOO Hot. **Also Called:** • Steaming • Boiling • Overheating	A. Thermostat	1. Thermostat out of calibration or defective — adjust or replace. To decrease tank temperature, turn the adjustment shaft counterclockwise. If Ready Light does not come ON, the thermostat is defective, replace it.
16. Dry Coffee Grounds, All grounds not getting wet in Brew Chamber (after a brew cycle has been completed.)	A. Spray Disc and/or Gasket missing.	1. Check Spray Disc. The Spray Disc and Gasket must be properly in place to break up the water stream and completely wet coffee grounds.
	B. Filter Paper (Paper weave too porous).	1. Use proper filter papers to insure correct time for contact of water and coffee in the Brew Basket.
	C. Improper loading of the Brew Chamber.	1. Filter should be centered in the Brew Chamber and the bed of coffee grounds should be level.
17. Coffee Grounds do not get wet. Water stays in Basin Pan or Pan overflows, and/or water leaks out of the bottom of brewer body.	A. No Siphon Action.	1. Check for obstruction in elbow connections from Basin Pan to Tank Cover and Outlet Elbow and Tube to Spray Disc. 2. Check Tank Lid openings for lime buildup restricting water flow.
	B. Leak in Water Path from Water Input to final outlet at Spray Disc.	1. Check for correct fit and/or leakage at: a. Solenoid Valve and Fitting. b. Water Input Tubing from Solenoid Valve to Basin Pan. c. Tank Cover Gasket. d. Elbows and Tube connections from Basin Pan to Spray Disc.
18. Weak Coffee	A. Too much water.	1. Verify water level in decanter. Delivery should be 60 Oz. Adjust Timer for correct water delivery — (see Installation Instructions.)

PROBLEM	PROBABLE CAUSE	CORRECTIVE ACTION
18. Weak Coffee.	B. Temperature of water too low.	1. Check temperature of water out of Spray Disc (should be between 190 and 200 degrees F). Adjust thermostat to proper temperature. (See Thermostat Adjustment Procedure.)
	C. Improper loading of Brew Chamber.	1. Filter Paper must be centered in Brew Chamber and Coffee ground bed must be level.
	D. Not enough coffee grounds in Brew Chamber.	1. Verify coffee ground weight. Be sure to use the proper measure of coffee grounds.
19. Strong Coffee.	A. Not enough water.	1. Verify water level in decanter. Delivery should be 60 Oz. — adjust Timer for correct water delivery. (See Installation Instructions).
	B. Two (2) Filter Papers or improper Filter Paper.	1. Use only one (1) recommended Filter Paper. Improper Filter Paper can restrict water flow through coffee bed, causing over extraction, resulting in strong, bitter coffee.
	C. Too much coffee grounds in Brew Chamber.	1. Verify coffee ground weight. Be sure to use the proper measure of coffee grounds. Average volume is 1-1/4 to 3 ounces of coffee grounds.
20. Overflowing Decanter. Occasionally, not every time.	A. Receiving Decanter not empty when a brew cycle is started.	1. Always start a brew with an empty receiving Decanter under Brew Chamber.
	B. Water pressure is fluctuating.	1. See: 7D "Water Pressure Fluctuations."
21. No Water from Faucet.	A. Incoming water source shut off.	1. Check and be sure the water source valve is open.
	B. Needle Valve Shut-off (between water inlet "T" fitting and water tank.)	1. The needle valve must be open to permit water flow through the faucet, setting is approximately three (3) full turns from a closed condition. (The needle valve is also used to adjust the force of the water stream from the faucet.)
22. Faucet keeps dripping.	A. Foreign material inside the faucet valve seat preventing faucet seat from shutting off water flow completely.	1. Shut off water supply, disassemble and clean the faucet valve seat. If faucet still leaks or drips, install a complete repair kit. If faucet continues to drip, the seat has been damaged, replace Faucet Assembly.

PROBLEM	PROBABLE CAUSE	CORRECTIVE ACTION
23. Brew Time Exceeds 4-1/2 minutes.	A. Use of two (2) Filter Papers or improper Filter Paper.	1. Use only one (1) recommended Filter Paper.
	B. Lime Deposits in Brewer.	1. Check Elbows and Water Outlet Tube for lime deposits or BLOCKAGE. 2. Check tank lid openings for lime deposit or foreign material blockage. 3. Delime Elbows and/or Unit. (Consult a qualified Service Technician.)
24. Warming Plates will not heat.	A. Warmer Switch.	1. Switch OFF, turn ON. 2. Check Warmer Switch for proper operation. If it does not make and break load circuit — replace Switch.
	B. Warmer Element.	1. Check Warmer Element for continuity. If no continuity is present, replace Warmer Element.
25. Glow Light inside Switch does not light.	A. Loose Wire.	1. Locate loose wire and re-attach Terminal.
	B. Burned out Neon Glow Lamp. (Switch works, but light does not glow.)	1. Remove complete lighted Switch and replace.

WIRING DIAGRAM
For
MODEL NOS. 8516 and 8518

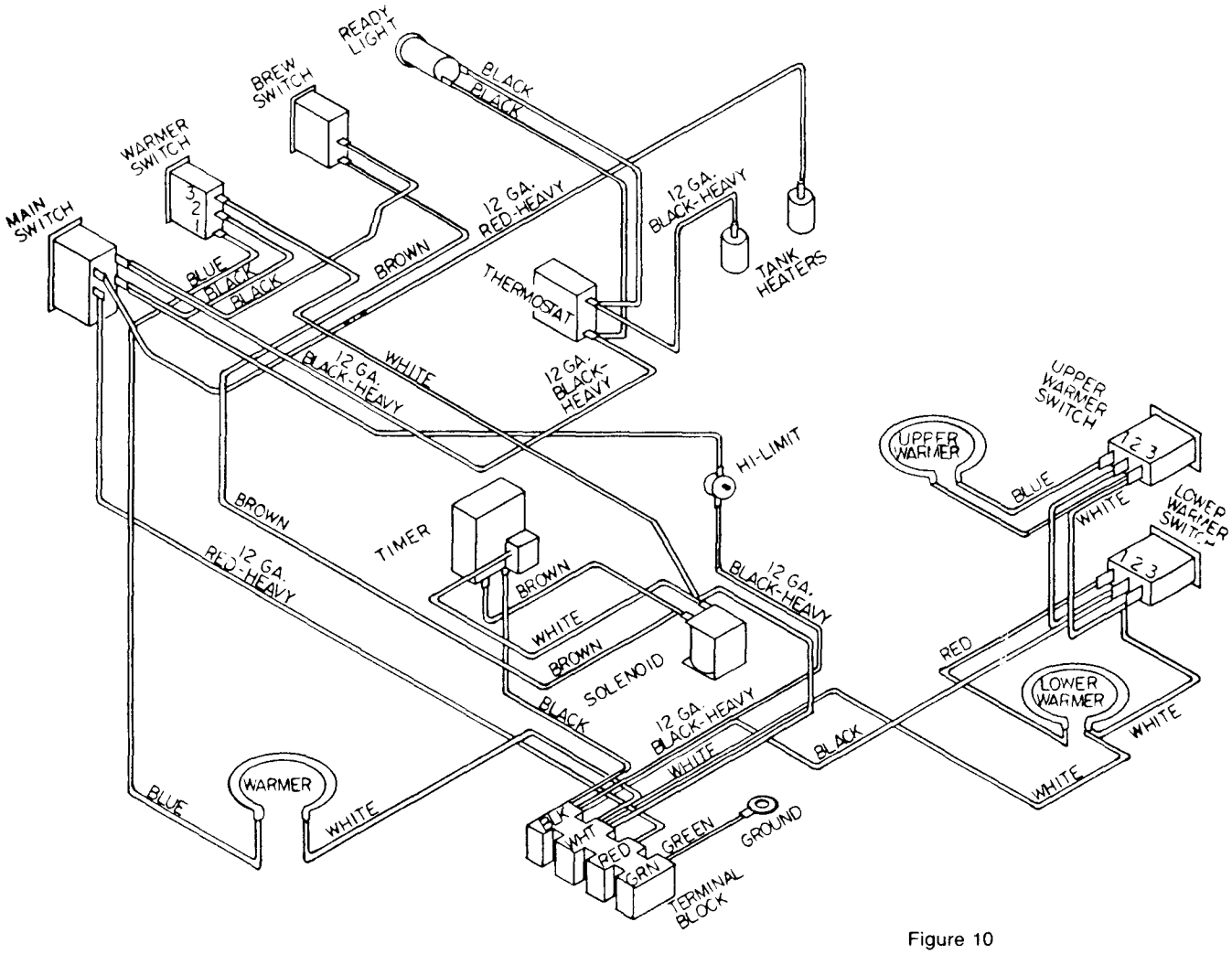

Figure 10

NOTE: All wiring 16 gauge, except where noted.

This diagram is the same for Models 8516 and 8518, and covers both brewing sections of the units.

ADDITIONAL SERVICE INFORMATION

Ref. #29 COLD WATER ENTRANCE SOLENOID VALVE PART NO. 8541-120
Consists of Valve and Flow Control

SOLENOID VALVE REPLACEMENT PARTS
(For Blue Coil Valve)

(No Kit Parts Sold Separately)

(1)	8541-120C	Coil Assembly — 120V.
(2)	8541-120K	Solenoid Repair Kit Vacuum Pac consists of: (2A) Spring (2B) Plunger (2C) Seal Ring
(3)	8541-120F	(3A) Flow Control
(4)	8541-120WS	(2D) Service Wrench
(5)	8810-103	Solenoid Valve Only (Minus 2D & 3A)

SOLENOID VALVE REPLACEMENT PARTS
(For Black Coil Valve)

(No Kit Parts Sold Separately)

(1)	8541-120CS	Coil Assembly — 120V.
(2)	8541-120JS	Solenoid Repair Kit Vacuum Pac consists of: (2A) Spring (2B) Plunger (2C) Seal Ring (2D) Service Wrench
(3)	8541-120KS	Solenoid Overhaul Kit Vacuum Pac consists of: (2A) Spring (2B) Plunger (2C) Seal Ring (2D) Service Wrench (3A) Flow Control
(4)	8541-120F	(3A) Flow Control
(5)	8541-120WS	(2D) Service Wrench
(6)	8810-103	Solenoid Valve Only (Minus 2D & 3A)

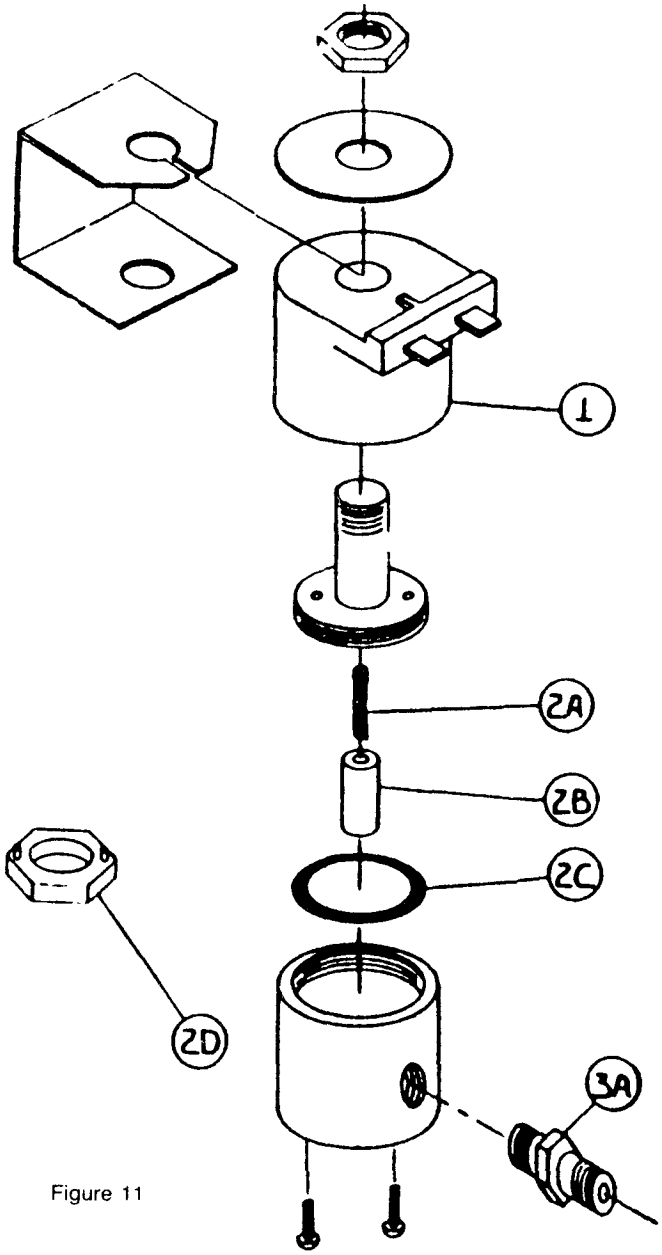

Figure 11

ADDITIONAL SERVICE INFORMATION (Cont'd.)

HOT WATER FAUCET
REPLACEMENT PARTS LIST

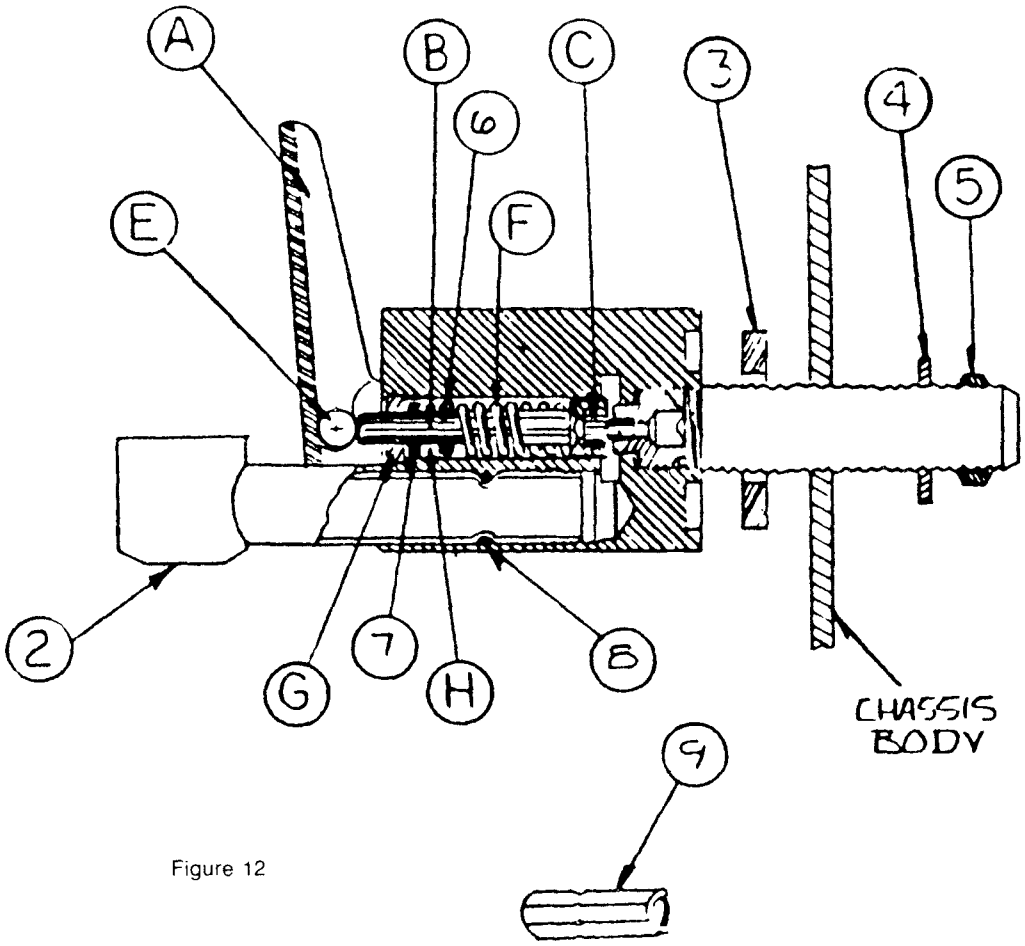

Figure 12

Ref. No.	Part No.	Description
1.	8551-275	Repair Kit (sold as Kit only)
A.		Handle (Color — Red)
B.		Valve-Stem
C.		Valve Disc
D.	Kit	"0" Ring — #6, #7 & #8
E.	Contains	Tee Nut
F.		Spring
G.		Guide
H.		Bushing
		Instruction Card (Not Shown)

A.	8706-169B Handle, Red
2.	8551-275B Stream Straightener (Not Shown)
3.	8551-100A Washer Rubber
4.	8551-100B 7/16 External Tooth Lock Washer
5.	8551-100C Hex Lock Nut
	SEALS AVAILABLE
6.	8551-200B "0" Ring Stem Seal 5/16" O.D.
7.	8551-200A "0" Ring Seal 1/4" O.D.
8.	8551-200C "0" Ring Spout Seal 3/8" O.D.
C.	8551-275A Valve Disc
	TOOL AVAILABLE
9.	8551-200E Adapter Tool — Service Wrench