KLT-G Series

GAS TILTING FLOOR KETTLE
INSTALLATION - OPERATION - MAINTENANCE

BLODGETT OVEN COMPANY

www.blodgett.com
44 Lakeside Avenue, Burlington, Vermont 05401 USA
Manufacture Service Questions: 866-518-3977

PART NUMBER 170097 REV B (04/11)

THIS MANUAL MUST BE RETAINED FOR FUTURE REFERENCE. READ, UNDERSTAND AND FOLLOW THE INSTRUCTIONS AND WARNINGS CONTAINED IN THIS MANUAL.

FOR YOUR SAFETY
DO NOT STORE OR USE GASOLINE OR OTHER FLAMMABLE VAPORS AND LIQUIDS IN THE VICINITY OF THIS OR ANY OTHER APPLIANCE.

POST IN A PROMINENT LOCATION
INSTRUCTIONS TO BE FOLLOWED IN THE EVENT USER SMELLS GAS. THIS INFORMATION SHALL BE OBTAINED BY CONSULTING YOUR LOCAL GAS SUPPLIER. AS A MINIMUM, TURN OFF THE GAS AND CALL YOUR GAS COMPANY AND YOUR AUTHORIZED SERVICE AGENT. EVACUATE ALL PERSONNEL FROM THE AREA.

WARNING
IMPROPER INSTALLATION, ADJUSTMENT, ALTERATION, SERVICE OR MAINTENANCE CAN CAUSE PROPERTY DAMAGE, INJURY OR DEATH. READ THE INSTALLATION, OPERATING AND MAINTENANCE INSTRUCTIONS THOROUGHLY BEFORE INSTALLING OR SERVICING THIS EQUIPMENT.

NOTIFY CARRIER OF DAMAGE AT ONCE
IT IS THE RESPONSIBILITY OF THE CONSIGNEE TO INSPECT THE CONTAINER UPON RECEIPT OF SAME AND TO DETERMINE THE POSSIBILITY OF ANY DAMAGE, INCLUDING CONCEALED DAMAGE. WE SUGGEST THAT IF YOU ARE SUSPICIOUS OF DAMAGE TO MAKE A NOTATION ON THE DELIVERY RECEIPT. IT WILL BE THE RESPONSIBILITY OF THE CONSIGNEE TO FILE A CLAIM WITH THE CARRIER. WE RECOMMEND THAT YOU DO SO AT ONCE.

IMPORTANT - READ FIRST - IMPORTANT

CAUTION: BE SURE ALL OPERATORS READ, UNDERSTAND AND FOLLOW THE OPERATING INSTRUCTIONS, CAUTIONS, AND SAFETY INSTRUCTIONS CONTAINED IN THIS MANUAL.

WARNING: THIS UNIT IS INTENDED FOR USE IN THE COMMERCIAL HEATING, COOKING AND HOLDING OF WATER AND FOOD PRODUCTS, PER THE INSTRUCTIONS CONTAINED IN THIS MANUAL. ANY OTHER USE COULD RESULT IN SERIOUS PERSONAL INJURY OR DAMAGE TO THE EQUIPMENT AND WILL VOID WARRANTY.

WARNING: KETTLE MUST BE INSTALLED BY PERSONNEL QUALIFIED TO WORK WITH ELECTRICITY AND PLUMBING. IMPROPER INSTALLATION CAN RESULT IN INJURY TO PERSONNEL AND/OR DAMAGE TO EQUIPMENT.

DANGER: ELECTRICALLY GROUND THE UNIT AT THE TERMINAL PROVIDED. FAILURE TO GROUND UNIT COULD RESULT IN ELECTROCUTION AND DEATH.

WARNING: DO NOT CONNECT ANY PIPING TO THE POP SAFETY VALVE. THE VALVE MUST BE FREE TO VENT STEAM AS NEEDED. THE ELBOW ATTACHED TO THE SAFETY VALVE SHOULD POINT TO THE FLOOR. IMPROPER INSTALLATION WILL VOID WARRANTY.

WARNING: AVOID ALL DIRECT CONTACT WITH HOT EQUIPMENT SURFACES. DIRECT SKIN CONTACT COULD RESULT IN SEVERE BURNS.

WARNING: AVOID ALL DIRECT CONTACT WITH HOT FOOD OR WATER IN THE KETTLE. DIRECT CONTACT COULD RESULT IN SEVERE BURNS.

CAUTION: DO NOT OVER FILL THE KETTLE WHEN COOKING, HOLDING OR CLEANING. KEEP LIQUIDS A MINIMUM OF 2-3” (5-8 CM) BELOW THE KETTLE BODY RIM TO ALLOW CLEARANCE FOR STIRRING, BOILING AND SAFE PRODUCT TRANSFER.

WARNING: TAKE SPECIAL CARE TO AVOID CONTACT WITH HOT KETTLE BODY OR HOT PRODUCT WHEN ADDING INGREDIENTS, STIRRING OR TRANSFERRING PRODUCT TO ANOTHER CONTAINER.

WARNING: WHEN TILTING KETTLE FOR PRODUCT TRANSFER:
1) USE CONTAINER DEEP ENOUGH TO CONTAIN AND MINIMIZE SPLASHING.
2) PLACE CONTAINER ON STABLE, FLAT SURFACE, AS CLOSE TO KETTLE AS POSSIBLE.
3) DO NOT OVER FILL CONTAINER. AVOID DIRECT SKIN CONTACT WITH HOT CONTAINER AND ITS CONTENTS.

CAUTION: KEEP FLOORS IN FRONT OF KETTLE WORK AREA CLEAN AND DRY. IF SPILLS OCCUR, CLEAN IMMEDIATELY, TO AVOID SLIPS OR FALLS.

WARNING: FAILURE TO CHECK SAFETY VALVE OPERATION PERIODICALLY COULD RESULT IN PERSONAL INJURY AND/OR DAMAGE TO EQUIPMENT.

WARNING: WHEN TESTING SAFETY VALVE, AVOID ANY EXPOSURE TO THE STEAM BLOWING OUT OF THE SAFETY VALVE. DIRECT CONTACT WITH STEAM COULD RESULT IN SEVERE BURNS.

WARNING: TO AVOID INJURY, READ AND FOLLOW ALL PRECAUTIONS STATED ON THE LABEL OF THE WATER TREATMENT COMPOUND.

WARNING: BEFORE REPLACING ANY PARTS, DISCONNECT THE UNIT FROM THE ELECTRIC POWER SUPPLY AND CLOSE THE MAIN GAS VALVE. ALLOW FIVE MINUTES FOR UNBURNED GAS TO VENT.

IMPORTANT - READ FIRST - IMPORTANT

WARNING: KEEP WATER AND SOLUTIONS OUT OF CONTROLS AND ELECTRICAL EQUIPMENT. NEVER SPRAY OR HOSE THE SUPPORT HOUSING OR ELECTRICAL CONNECTIONS.

CAUTION: MOST CLEANERS ARE HARMFUL TO THE SKIN, EYES, MUCOUS MEMBRANES AND CLOTHING. PRECAUTIONS SHOULD BE TAKEN. WEAR RUBBER GLOVES, GOGGLES OR FACE SHIELD AND PROTECTIVE CLOTHING. CAREFULLY READ THE WARNINGS AND FOLLOW THE DIRECTIONS ON THE LABEL OF THE CLEANER TO BE USED.

CAUTION: USE OF ANY REPLACEMENT PARTS OTHER THAN THOSE SUPPLIED BY THE MANUFACTURER OR AN AUTHORIZED SERVICE AGENT CAN CAUSE OPERATOR INJURY AND DAMAGE TO THE EQUIPMENT, AND WILL VOID ALL WARRANTIES.

IMPORTANT: SERVICE PERFORMED BY OTHER THAN FACTORY AUTHORIZED PERSONNEL WILL VOID WARRANTIES.

WARNING: DO NOT HEAT AN EMPTY KETTLE. EXCESSIVE STEAM PRESSURE COULD DEVELOP.

Table of Contents

References

CSA INTERNATIONAL
8501 East Pleasant Valley Road
Cleveland, Ohio 44131

NSF INTERNATIONAL
798 N. Dixboro Rd.
P.O. Box 130140
Ann Arbor, Michigan 48113-0140

AMERICAN NATIONAL STANDARDS INST., Inc.
1430 Broadway
New York, New York 10018

Z223.1-1984 - National Fuel Gas Code
Z21.30 - Installation Gas Appliances & Piping

KLENZADE SALES CENTER ECOLAB, Inc.
370 Wabasha
St. Paul, Minnesota 55102

NATIONAL FIRE PROTECTION ASSOCIATION
60 Battery March Park
Quincy, Massachusetts 02269

NFPA/54 -Installation Gas Appliances & Piping
NFPA/70 - The National Electric Code

ZEP MANUFACTURING COMPANY
1310-T Seaboard Industrial Boulevard
Atlanta, Georgia 30318

Equipment Description

The Blodgett KLT-G is a floor-mounted, tilting, steam jacketed kettle with a thermostatically controlled, self-contained, gas-heated steam source and appropriate controls, mounted on a sturdy base. The kettle is available in 20, 40, 60 or 80 gallon capacities.

The body of the kettle is constructed of stainless steel, welded into one solid piece. The kettle is furnished with a reinforced rim and a butterfly shaped pouring lip. It has a steam jacket which is ASME shop inspected and registered with the national board for working pressures up to 50 PSI. Kettle finish is 180 emery grit on the inside and bright high buff polish on the outside.

The kettle is tilted with a hand crank to pour out its contents. Stainless steel panels enclose the controls and the base. Four stainless steel tubular legs support the unit. Bullet or flanged feet on each of the legs can be adjusted to level the kettle. Optional feature can include a two inch tangent draw-off valve.

The self-contained steam source is heated by propane or natural gas. Ignition is electronic.

The kettle is charged at the factory with chemically pure water which contains rust inhibitors. The steam source provides kettle temperatures of 150º to approximately 295ºF (65 to 150ºC). Unit controls include a thermostat, pressure gauge, safety valve, pressure limit control, low water cut-off, power switch and gas regulator valve. The gas supply shuts off automatically when the kettle is tilted.

The unit must be specified for use with natural or propane gas. Service connections for gas and electricity are required. Standard power supply is 115 Volt. Alternate voltages (208V or 240V) are available.

Model	20G-KLT	40G-KLT	60G-KLT	80G-KLT
Kettle Capacity	20 gallons (75 liters)	40 gallons (150 liters)	60 gallons (225 liters)	80 gallons (300 liters)
Jacket Capacity	2-1/2 gallons	3-1/2 gallons	4 gallons	1-1/4 gallons
Kettle Body Inside Diameter	20 inches (508 mm)	26 inches (660 mm)	30 inches (762 mm)	34 inches (863 mm)
Base - Width	35 inches (889 mm)	47 inches (1194 mm)	47 inches (1194 mm)	52 inches (1320 mm)
Base - Front to Back	28 inches (736 mm)	29 inches (736 mm)	29 inches (736 mm)	37-1.2 inches (952 mm)
Firing Rate /hr	72,000 BTU	100,000 BTU	150,000 BTU	150,000 BTU
Energy into Product /hr	44,140 BTU	65,000 BTU	93,000 BTU	93,000 BTU

Options available with listed models are:

1. Two inch tangent drawoff
2. Strainers, solid disk, 1/4 or 1/8 inch holes
3. Lift-off cover
4. Counterbalanced cover w/actuator
5. Basket Inserts
6. Water fill faucets with swing spout
7. Kettle Brush Kit

Inspection & Unpacking

CAUTION
SHIPPING STRAPS ARE UNDER TENSION AND CAN SNAP BACK WHEN CUT. TAKE CARE TO AVOID PERSONAL INJURY OR DAMAGE TO THE UNIT BY STAPLES LEFT IN THE WALLS OF THE CARTON.

CAUTION
THIS UNIT WEIGHS BETWEEN 535 AND 978 POUNDS (245 TO 400 Kg) DEPENDING ON SIZE. INSTALLER SHOULD USE PROPER EQUIPMENT TO LIFT SAFELY.

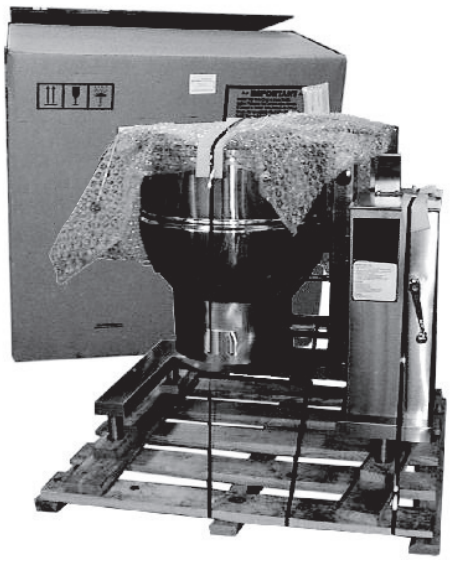

The unit will arrive in a heavy shipping carton and will be bolted or banded to a skid. Immediately upon receipt, inspect the carton carefully for exterior damage.

Carefully cut any polyester straps around the carton and detach the sides of the box from the skid. Pull the carton up off the unit. Thoroughly inspect the unit for hidden damage. Report any shipping damage or incorrect shipments to the delivery agent.

Write down the model number, serial number, and installation date, and retain this information for future reference. Space for these entries is provided at the top of the Service Log at the back of this manual. Keep this manual on file and available for operators to use.

When installation is to begin, carefully cut any straps which hold the unit on the skid. Lift the unit straight up off the skid. Examine packing materials to be sure loose parts are not discarded with the materials.

Installation

WARNING
THE UNIT MUST BE INSTALLED BY PERSONNEL WHO ARE QUALIFIED TO WORK WITH GAS, ELECTRICITY AND PLUMBING. IMPROPER INSTALLATION CAN CAUSE INJURY TO PERSONNEL AND/OR DAMAGE TO THE EQUIPMENT. THE UNIT MUST BE INSTALLED IN ACCORDANCE WITH APPLICABLE CODES. THE UNIT MUST BE INSTALLED BY A LICENSED PLUMBER OR GAS FITTER WHEN INSTALLED WITHIN THE COMMONWEALTH OF MASSACHUSETTS.

DANGER
ELECTRICALLY GROUND THE UNIT AT THE TERMINAL PROVIDED. FAILURE TO GROUND UNIT COULD RESULT IN ELECTROCUTION AND DEATH.

For efficient performance the kettle must be installed in a well-ventilated area. Items which might restrict or obstruct the flow of air for combustion and ventilation must be removed. The area directly around the appliance must be free of combustible materials.

1. Installation can be on a combustible or noncombustible floor. Clearances should be per table below.

	Minimum Clearance from Combustible walls	Minimum Clearance from Non-Combustible walls	Recommended Clearances
Left Side	6 in.	0 in.	6 in.
Right Side	6 in.	0 in.	10 in.
Rear	10 in.	10 in.	12 in.

2. The kettle should be installed in an adequately ventilated room with provision for adequate air supply. The ventilation must employ a vent hood and exhaust fan with no direct connection between the vent duct and the kettle flue. Do not obstruct the flue or vent duct after installation.

3. Set the kettle in place and level it using a spirit level on the bar rim, by turning the bullet or flange feet to adjust leg length. Allow clearance around the unit for cleaning, maintenance and service.

4. Complete the piping to the gas service main with ½” line or approved equivalent.

5. For standard units, provide 115 vac, 60 Hz, single phase 5 AMP electrical service. The unit may also be ordered for alternate electric service of 208 VAC or 240 VAC. Observe local codes and/or The National Electrical Code in accordance with ANSI/NFPA 70 (current edition), or the Canadian Electrical Code, CSA C22.2 (current edition), as applicable. Use the wiring diagram inside the service panel and at the rear of this manual

6. Bring electrical service through the entrance at the rear of the support housing with a ½ inch conduit connector. Make a watertight connection with the incoming lines.

7. Electrically ground the unit at the terminal provided.

8. After the kettle has been connected to the gas supply, check all gas joints for leaks. DO NOT USE FLAME TO CHECK FOR LEAKS. A thick soap solution or other suitable leak detector should be employed.

Installation

WARNING
DO NOT CONNECT ANY PIPING TO THE PRESSURE RELIEF VALVE. THE VALVE MUST BE FREE TO VENT STEAM AS NEEDED. IMPROPER INSTALLATION WILL VOID THE WARRANTY! THE ELBOW ATTACHED TO THE PRESSURE RELIEF VALVE MUST POINT TO THE FLOOR.

WARNING
DO NOT STAND ON OR APPLY UNNECESSARY WEIGHT OR PRESSURE ON THE KETTLE FRONT OR POURING LIP. THIS COULD RESULT IN THE OVERLOAD AND FAILURE OF THE TILT MECHANISM, AND POSSIBLE SERIOUS INJURY AND BURNS TO THE OPERATOR AND OTHERS.

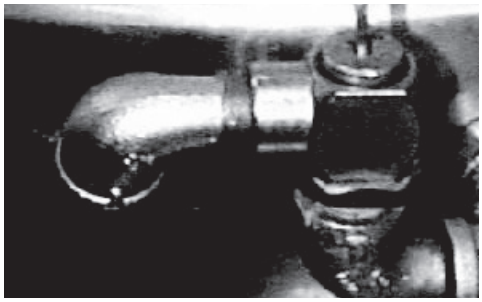

The open end of the pressure relief valve elbow must face downward.

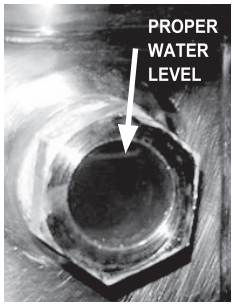

When attaching the draw-off valve hand tighten the nut.

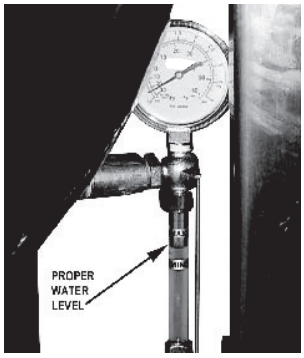

Each day confirm the jacket water level by checking the water gauge.

9. The gas supply and unit's installation must conform with local codes or in the absence of local codes, with the National Fuel Gas Code, ANSI Z223.1/NFPA 54 (current edition), or the Natural Gas and Propane Installation Code CSA 149.1(current edition), as applicable. Additionally following must be complied with: THE AREA DIRECTLY AROUND THE APPLIANCE MUST BE CLEARED OF ALL COMBUSTIBLE MATERIAL. FAILURE TO FOLLOW THESE INSTRUCTIONS CAN CAUSE BODILY INJURY AND /OR PROPERTY DAMAGE. The appliance and its individual shut-off valve must be disconnected from the gas supply piping system during any testing at pressures in excess of ½ PSI (3.45 kPa). The appliance must be isolated from the gas supply piping system by closing its individual manual shut-off valve during any pressure testing at or less than ½ PSI (3.45 kPa).

10. Confirm that the jacket water level is between the gauge glass markers or inside the sight glass port. If the level is low, follow instructions under "Jacket Filling and Water Treatment," Page 16.

11. The open end of the elbow on the outlet of the safety valve must face downward. If it does not, turn it to the correct position.

12. For units with optional tangent draw-off, assemble the tangent draw-off by placing the large nut over the draw-off valve and inserting it into the draw-off tube. ONLY HAND-TIGHTEN THE NUT to complete installation.

13. Now that the kettle has been installed, you should test to ensure that it is operating correctly.
    a. Remove literature and packing materials from inside and outside of the unit.

    b. If the unit is equipped with a draw-off valve (product outlet), clean out any material which might clog or damage the draw-off.

    c. Confirm that the tilting mechanism is operating properly by tilting the kettle through its full range. Then return the kettle to the upright position.

    e. Turn on the electrical service to the unit.

    f. Pour 1-2 quarts of water into the kettle.

    g. Following "To Start Kettle" instructions in the "Operation" section (Page 9), begin heating the water at the highest thermostat setting. The heat indicator light should come on, and heating should continue until the boils.

14. If the unit functions as described it is ready for use. If it does not function as described, contact your local Authorized Service Agency.

Operation

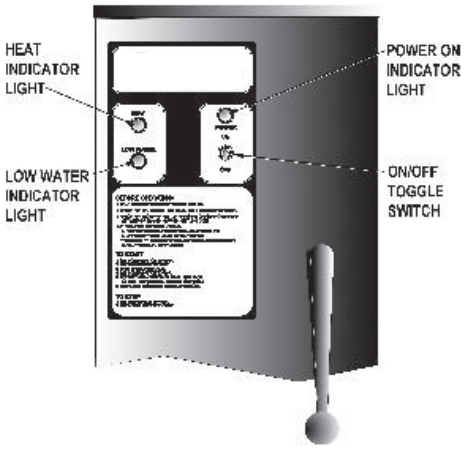

A. Controls

Operator controls for the kettle are:

1. Manual gas valve (on gas line behind the unit), which controls the supply of gas from the main to the unit.

2. On-Off (Toggle) Switch. This controls the supply of electric power to the control circuits.

3. Thermostat dial, which turns the thermostat on or off, and sets the kettle temperature.

4. Tilting crank, used to tilt the kettle body.

5. Indicator Lights to alert operator of unit conditions:
   a. Power On Indicator - shows that the unit is turned on

   b. Heat Indicator - indicates that main gas is on to produce steam in the kettle jacket.

   c. Low Water indicator - shows that jacket water is low

6. Unit gas pressure regulator adjustment - located behind the access door in the kettle skirt.

B. Operating Procedure

1. To Start Kettle:
   a. EVERY DAY make sure that the jacket water level is between the markers on the gauge glass or inside the sight glass port. If the level is too low, see “Jacket Filling and Water Treatment” on page 16.

   b. Check the pressure gauge. If the gauge does not show 20 to 30 inches of mercury (Hg) vacuum (that is a reading of 20 to 30 below 0 atmospheric pressure), see “Jacket Vacuum” on page 16.

   c. Do not attempt to light any burner with a flame. Turn the manual gas valve ON (align handle with gas line).
      1) Turn toggle (on-off) switch ON. The electronic ignition will attempt to light the pilot for 90 seconds, or until it is lit. Once lit, proceed to step two.
      2) Turn thermostat to desired setting. The main gas burner will ignite, and will cycle to maintain the set temperature. The
      3) If the unit does not light, turn it off and wait five minutes. Then follow the instructions again.

2. To Empty Kettle:
   a. To tilt the body of the kettle forward, turn the hand crank on the front of the cabinet counter-clockwise. The body will stay in the position it holds when you stop cranking. To return the kettle body to its upright position, turn the crank clockwise.

   b. Product may also be transferred by means of the optional draw-off valve, if the kettle is so equipped.

CAUTION
DO NOT TILT KETTLE WITH LIFT-OFF COVER IN PLACE. COVER MAY SLIDE OFF, CAUSING INJURY TO OPERATOR.

WARNING
AVOID ALL DIRECT CONTACT WITH HOT KETTLE BODY, HOT FOOD OR WATER IN THE KETTLE. DIRECT CONTACT COULD RESULT IN SEVERE BURNS.

WARNING
WHEN TILTING KETTLE FOR PRODUCT TRANSFER:
1) WEAR PROTECTIVE OVEN MITT AND PROTECTIVE APRON.
2) USE CONTAINER DEEP ENOUGH TO CONTAIN AND MINIMIZE PRODUCT SPLASHING.
3) PLACE CONTAINER ON STABLE, FLAT SURFACE, AS CLOSE TO KETTLE AS POSSIBLE.
4) STAND TO LEFT OR RIGHT SIDE OF KETTLE (DEPENDING ON TILTING HANDLE PLACEMENT) WHILE POURING. DO NOT STAND DIRECTLY IN POUR PATH OF HOT CONTENTS.
5) POUR SLOWLY, MAINTAIN CONTROL OF KETTLE BODY HANDLE AT ALL TIMES, AND RETURN KETTLE BODY TO UPRIGHT POSITION AFTER CONTAINER IS FILLED OR TRANSFER IS COMPLETE.
6) DO NOT OVER FILL CONTAINER. AVOID DIRECT SKIN CONTACT WITH HOT CONTAINER AND ITS CONTENTS.

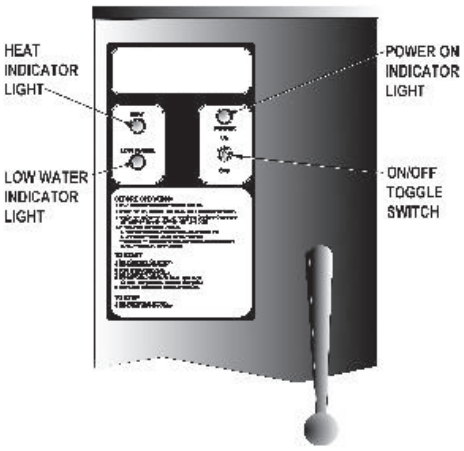

3. To Shut Down Kettle:
   a. Turn thermostat dial to OFF.

   b. Turn toggle switch to OFF.

4. For a prolonged shut-down:
   a. Follow the procedure above.

   b. Turn the manual gas valve off (handle at right angles to gas line).

   c. Disconnect electric power from the unit.

5. If power fails:
   a. Do not attempt to operate the unit until electric power is restored.

   b. When power comes back on, follow directions “To Start Kettle,” on the previous page.

C. Use of Common Accessories

1. Lift-Off or Counterbalanced Cover

   As with stock pot cooking, an optional cover can speed up the heating of water and food products. It helps retain heat and reduces the heat and humidity in the kitchen. A cover can reduce some product cook times and help maintain the temperature, color and texture of products held or simmered for longer periods.

   Be sure the handle is secure on the lift-off cover before using. ALWAYS use the handle to place or remove cover from the kettle. Wear protective oven mitts and apron

   When putting a lift-off cover on the kettle, position it on top of kettle rim, with its flat edge facing the pouring lip.

   When removing a lift-off cover:
   a. Firmly grasp the handle, and lift the rear edge (farthest from operator) 1-2” (3-5 cm) to allow steam and water vapor to escape. Wait 2-3 seconds.

   b. Tilt cover to 45-60° angle to allow any hot condensate or product to roll off cover back into kettle.

   c. Remove cover, ensuring that remaining hot condensate or product does not drip on operator, floor or work surfaces.

   d. Place cover on safe, flat, sanitary, out-of-the way surface, or return to kettle.

CAUTION
DO NOT OVER FILL THE KETTLE WHEN COOKING, HOLDING OR CLEANING. KEEP LIQUIDS AT A MINIMUM OF 2-3" (5-8 CM) BELOW THE KETTLE BODY RIM TO ALLOW CLEARANCE FOR STIRRING, BOILING AND SAFE PRODUCT TRANSFER.

WARNING
AVOID ALL DIRECT CONTACT WITH HOT FOOD OR WATER IN THE KETTLE. DIRECT CONTACT COULD RESULT IN SEVERE BURNS.

2. Basket Insert
An optional kettle basket insert set will assist in cooking water-boiled products including eggs, potatoes, vegetables, shell fish, pasta and rice. The nylon mesh liner must be used for products smaller than the basket mesh size, (approx. ¼" (6 mm). This includes rice and small pasta shapes.

   a. Allow for displacement of the three baskets and product. This may mean only half filling the kettle. Test baskets and product displacement with the kettle OFF, and with cold water in the kettle.

   b. Load baskets on a level, stable work surface.

   c. Lift loaded baskets with both hands. Get help from another person if the basket is too heavy for safe handling.

   d. Slowly lower product into kettle and securely hook basket to the "Y" frame.

   e. When removing baskets with cooked product, lift straight up, ensuring basket bottoms clear the kettle rim and pouring lip. Wear protective oven mitts and protective apron.

   f. Allow hot water to fully drain from product, before moving basket away from the kettle. Do not rest baskets on kettle rim or pouring lip. If baskets are too heavy for individual to lift and safely move, get help. Remove product immediately from basket into another container, being sure to avoid contact with hot product and hot basket or...

   g. Place baskets with food on a stable, flat surface, inside a solid steamer or bake pan, to catch any remaining hot water draining from product.

Sequence of Operation

The following “action-reaction” outline is provided to help understand how the kettle works.

1. When the power switch is turned on, it starts the spark igniter and opens the automatic valve for the pilot burner. The spark ignites a pilot flame, which heats the sensor. The sensor then sends a signal to turn off the spark. The flame thereafter acts as a standing pilot until the power is turned off.

2. If the pilot flame is not sensed within 90 seconds after spark begins, a timer shuts down the entire operation. To attempt a second trial for ignition, turn off the power switch. Check the gas supply valves and wait five minutes before trying again by switching power on. If you cannot establish a pilot flame in four tries, close all valves, turn off the power, and contact an authorized Service Agency.

3. When the operator sets a temperature on the thermostat, it causes the automatic valve to admit gas to the main burner, where it is ignited by the pilot flame. When the kettle reaches the set temperature, the thermostat switch opens. This stops the signal to the gas control valve and shuts off gas to the main burner. The pilot flame remains lit. When the kettle cools below the set temperature, the thermostat switch closes and starts another cycle. On and off cycling continues and maintains the kettle at the desired temperature. This action is indicated by the Heat indicator light.

The kettle has the following safety features in addition to the 90-second ignition timer:

1. Low water cutoff relay that will shut off gas supplies to all burners until the jacket water level is corrected.

2. High limit pressure switch, set to open at about 46 PSI and to shut down the burners until jacket pressure is decreased.

3. Pop safety valve, which will release steam if jacket pressure exceeds 50 PSI.

4. Tilt switch, which shuts off all burners when the kettle is tilted.

5. Gas pressure regulator built into the gas control valve.

Cleaning

WARNING
KEEP WATER AND SOLUTIONS AWAY FROM CONTROLS AND ELECTRICAL EQUIPMENT. NEVER SPRAY THE SUPPORT HOUSING OR ELECTRICAL CONNECTIONS.

CAUTION
MOST CLEANERS ARE HARMFUL TO THE SKIN, EYES, MUCOUS MEMBRANES, AND CLOTHING. PRECAUTIONS SHOULD BE TAKEN. WEAR RUBBER GLOVES, GOGGLES OR FACE SHIELD, AND PROTECTIVE CLOTHING. READ THE WARNINGS AND FOLLOW THE DIRECTIONS ON THE LABEL OF THE CLEANER CAREFULLY.

CAUTION
DO NOT MIX PARTS OF DIFFERENT DRAWOFF VALVE ASSEMBLIES. THE PARTS ARE NOT INTERCHANGEABLE.

NOTICE
NEVER LEAVE A CHLORINE SANITIZER IN CONTACT WITH STAINLESS STEEL SURFACES LONGER THAN 30 MINUTES. LONGER CONTACT CAN CAUSE STAINING AND CORROSION.

WARNING
WEAR EYE PROTECTION

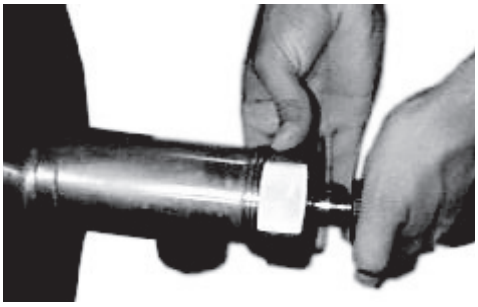

When attaching the draw-off valve, just hand tighten the nut.

A. Suggested Cleaning Supplies:

1. Cleaner, such as Klenzade HC-10 or HC-32 from ECOLAB, Inc. or equivalent.
2. Kettle brushes in good condition.
3. Sanitizer such as Klenzade XY-12.
4. Film remover such as Klenzade LC-30.

B. Precautions

Before cleaning, shut off the kettle by turning the thermostat dial to “OFF,” and shut off all electric power to the unit at a remote switch, such as the circuit breaker.

C. Procedure

1. Clean food-contact surfaces as soon as possible after use. If the unit is in continuous use, thoroughly clean and sanitize the interior and exterior at least once every 12 hours.

2. Scrape and flush out food residues. Be careful not to scratch the kettle with metal implements. (For TDO-equipped models only: After flushing the kettle, close the draw-off valve.)

3. Prepare a hot solution of the detergent/ cleaning compound as instructed by the supplier. Clean the unit thoroughly. A cloth moistened with cleaning solution can be used to clean controls, housings, and electrical conduits.

4. Models with TDO-valves: Disassemble the tangent draw-off valve. Clean the draw-off port and each valve part with a brush.

5. Rinse the kettle and draw-off valve parts thoroughly with hot water, then drain completely.

6. When you reassemble the draw-off valve, hand-tighten the nut which holds it in place.

7. As part of the daily cleaning program, clean soiled external and internal surfaces. Remember to check the sides of the unit and control housing.

8. To remove burnt on foods, use a brush, sponge, cloth, plastic or rubber scraper, or plastic wool with the cleaning solution. To reduce effort required in washing, let the detergent solution sit in the kettle and soak into the residue. Do NOT use abrasive materials or metal tools that might scratch the surface. Scratches make the surface harder to clean and provide places for bacteria to grow.

   Do NOT use steel wool, which may leave particles in the surface and cause eventual corrosion and pitting.

Cleaning

NOTICE
NEVER LEAVE A CHLORINE SANITIZER IN CONTACT WITH STAINLESS STEEL SURFACES LONGER THAN 30 MINUTES. LONGER CONTACT CAN CAUSE STAINING AND CORROSION.

9. The outside of the unit may be polished with a stainless steel cleaner such as “Zepper” from Zep Manufacturing Co. or equivalent.

10. When equipment needs to be sanitized, use a solution equivalent to one that supplies 200 parts per million available chlorine. Obtain advice on sanitizing agents from your supplier of sanitizing products.

11. Following the supplier’s instructions, apply the agent after the unit has been cleaned and drained. Rinse off the sanitizer thoroughly.

12. It is recommended that each piece of equipment be sanitized just before use.

13. If there is difficulty removing mineral deposits or a film left by hard water or food residues, clean the kettle thoroughly and then use a deliming agent, in accordance with the manufacturer’s directions. Rinse and drain the unit before further use.

14. If cleaning problems persist, contact your cleaning product representative for assistance. The supplier has a trained technical staff with laboratory facilities to serve you.

Maintenance

WARNING
WHEN TESTING, AVOID ANY EXPOSURE TO THE STEAM BLOWING OUT OF THE SAFETY VALVE. DIRECT CONTACT COULD RESULT IN SEVERE BURNS.

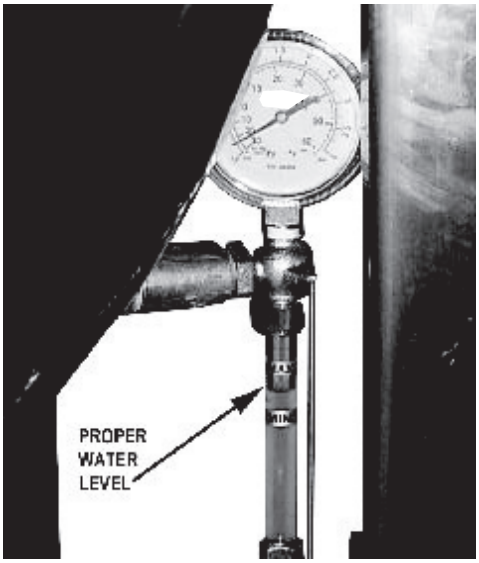

The pressure gauge should show a vacuum of 20 to 30 inches of mercury (Hg) and the water level should be between the markers when the kettle is cold.

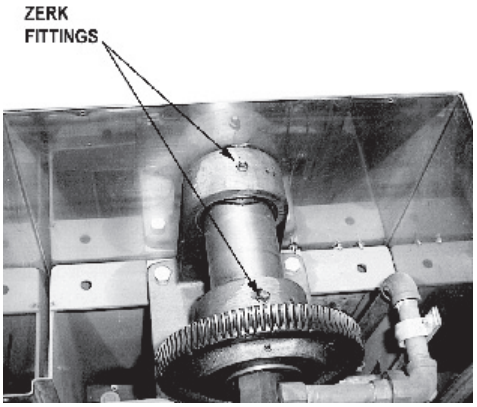

Add grease through Zerk Fittings.

NOTICE: Contact an authorized representative when repairs are required.

A. Periodic Maintenance

A Maintenance & Service Log is provided at the back of this manual with the warranty information. Each time maintenance is performed on your kettle, enter the date on which the work was done, what was done, and who did it. Keep this manual on file and available for operators to use.

Periodic inspection will minimize equipment down time and increase the efficiency of operation. The following points should be checked:

1. Check the pressure/vacuum gauge every day. The gauge should show a vacuum of 20 to 30 inches mercury (Hg), when the kettle is cold. If it does not, see “Jacket Vacuum” on page 16.

2. Also check the jacket water level every day. It should be between the markers on the gauge glass or inside the sight glass port. If the level is low, see “Jacket Filling and Water Treatment” on page 16.

3. Test the safety valve at least twice each month. With the kettle operating at five psi (105 kPa), pull the test lever and let it snap back to its closed position. If there is little discharge (mostly air), and the pressure gauge drops back to zero PSI, allow the pressure to build back to five PSI and repeat the procedure. (Tip: Using a screwdriver or other implement to pull the ring will help you avoid contact with the steam.)

4. If the valve does not activate, or there is no evidence of discharge, or the valve leaks, stop using the kettle and contact a qualified service representative.

5. Keep the primary burner gas jet air inlets free of dust and lint.

6. The pilot flame should be blue. It should envelop about ½ inch (12 mm) of the flame sensor tip.

7. The gear housing has fittings for lubrication of moving parts. The gears do not run in oil, so periodic lubrication with grease is necessary.

8. Frequency of lubrication depends on operating conditions, but it should be done at least once every six months.

9. Use a #2 grade LGI lithium grease to add grease through Zerk fittings on gear housing until it flows out of the bearings around the trunnion shaft.

10. Place liberal amounts of grease on the gear to cover the arc that is in contact with the worm gear.

11. Keep electrical wiring and connections in good condition.

12. Keep the inside of the control console clean and dry.

13. Keep burner slots clean.

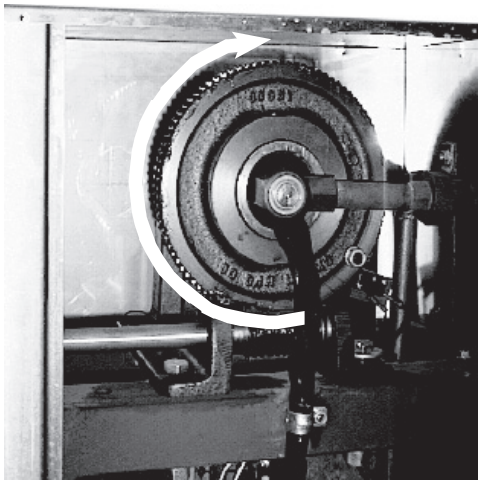

Liberally grease the wheel where it contacts the worm gear.

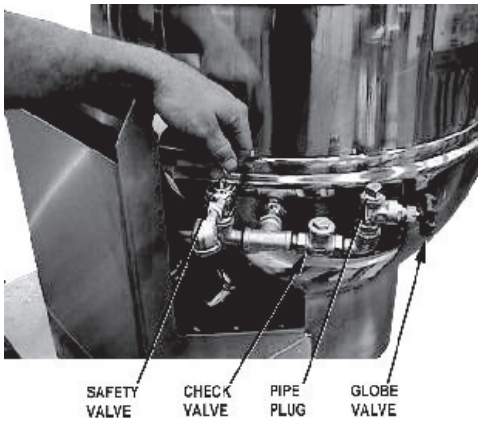

Test the safety valve at least twice monthly.

B. Jacket Vacuum/Removing Air from Jacket

When the kettle is cold, a positive pressure reading on the pressure/vacuum gauge or a reading near zero indicates that there is air in the jacket. Air in the jacket acts as an insulator, and slows kettle heating.

To remove air:

1. Start the unit. (Be sure there is water or product in the kettle when heating).
2. When the pressure/vacuum gauge reaches a positive pressure reading of five PSI, release the trapped air and steam by pulling up the safety valve ring for about five seconds. Repeat this step three or four times. Then let the pull ring snap back into the closed position.
3. If there is little discharge (mostly air), and the pressure gauge drops back to zero PSI, allow the pressure to build back to five PSI and repeat the procedure.
4. Once steam has been vented from the jacket as described in 2, above, remove the hot water from the kettle and replace it with cold. This will condense steam in the kettle jacket, and the pressure gauge should show a reading of 20 to 30 inches mercury (Hg) below zero. If it does not, or if the vacuum is leaking down, contact an authorized service agency to correct the problem.

C. Jacket Filling and Water Treatment

The jacket was charged at the factory with the proper amount of treated water. You may need to restore this water, either because it was lost as venting steam or by draining. If you are replacing water lost as steam, use distilled water. If you are replacing treated water that ran out of the jacket, prepare more treated water as directed in “Water Treatment Procedure,” below.

Allow the kettle to cool completely. The procedure will be easier with the kettle under vacuum (pressure gauge reading below zero).

1. Make sure the fill valve is closed, and remove the square head pipe plug with open-ended wrench.
2. Position a funnel in the opening and fill it with properly treated water.
3. Slowly open the fill valve to allow water to be sucked into the jacket. Quickly close the valve to prevent air from entering.
4. Check water level in the jacket to ensure that it is between minimum and maximum marks on glass or at the top of the sight glass port (see photo on page 15).
5. Close the valve and reinstall the square-head pipe plug.
6. Reestablish the jacket vacuum as described in Paragraph 2, above, if the pressure gauge does not show a negative reading of 20 to 30 inches mercury (Hg).

WARNING
TO AVOID INJURY, READ AND FOLLOW ALL PRECAUTIONS ON THE LABEL OF THE WATER TREATMENT COMPOUND.

WARNING
BEFORE REPLACING ANY PARTS, DISCONNECT THE UNIT FROM THE ELECTRIC POWER SUPPLY AND CLOSE THE MAIN GAS VALVE. ALLOW FIVE MINUTES FOR UNBURNED GAS TO VENT.

Model	Jacket Fill Capacity	
20G-KLT	2-1/2 gallons	9.5 liters
40G-KLT	3-1/2 gallons	13.3 liters
60G-KLT	4 gallons	15.1 liters
80G-KLT	1-1/4 gallons*	4.7 liters*

* This number is not a mistake

D. Water Treatment Procedure

A Maintenance & Service Log is provided at the back of this manual with the warranty information. Each time maintenance is performed on your kettle, enter the date on which the work was done, what was done, and who did it. Keep this manual on file and available for operators to use.

Periodic inspection will minimize equipment down time and increase the efficiency of operation. The following points should be checked:

1. Obtain water treatment compound and a pH test kit from your Service Agent.
2. Fill a mixing container with the measured amount of water required. (See table). Distilled water is recommended.
3. Hang a strip of pH test paper on the rim of the container, with about 1 inch of the strip below the surface of the water.
4. Measure the water treatment compound. One way to do this is to add the compound from a measuring cup.
5. Stir the water continuously, while you slowly add treatment compound, until the water has a pH between 10.5 and 11.5. Judge the pH by frequently comparing the test strip color with the color chart provided in the test kit.
6. As you add water to the jacket, check water level to ensure that it is between minimum and maximum marks on glass or at the top of the sight glass port (see photo on page 15). Stop adding water when it reaches the maximum marker on the gauge.
7. Record the exact amounts of water and treatment compound needed. These amounts may be used again, if the same water sources and compound are used. However, it is best to check the pH each time treated water is prepared.

E. Component Replacement

When component replacement involves breaking a gas pipe connection, check the new connection with soap solution or an appropriate leak detector. DO NOT USE A FLAME TO TEST FOR LEAKS.

Internal wiring is marked as shown on the circuit schematic drawings (inside control housing and in this manual). Be sure that new components are wired in the same manner as old components. An examination of the circuit schematic shows that the safety components are wired in series. In most cases, a faulty component may be isolated with a jumper wire to verify that the component is faulty. If this determination is made, contact an Authorized Service Agency for assistance.

Troubleshooting

Your kettle is designed to operate smoothly and efficiently if properly maintained. However, the following is a list of checks to make in the event of a problem. Wiring diagrams are furnished inside the service panel and in this manual. If an item on the list is followed by X, the work should be done by a qualified service representative.

WARNING
BEFORE REPLACING ANY PARTS, DISCONNECT THE UNIT FROM THE ELECTRIC POWER SUPPLY AND CLOSE THE MAIN GAS VALVE. ALLOW FIVE MINUTES FOR UNBURNED GAS TO VENT.

USING REPLACEMENT PARTS OTHER THAN THOSE SUPPLIED BY THE MANUFACTURER OR AN AUTHORIZED DISTRIBUTOR CAN CAUSE OPERATOR INJURY AND EQUIPMENT DAMAGE AND WILL VOID ALL WARRANTIES.

SYMPTOM	WHO	WHAT TO CHECK X indicates items which must be performed by an authorized technician.
Kettle is hard to tilt.	User	a. Gears for foreign materials, and lubrication.
	Auth Service Rep Only	b. Gears for alignment. X c. Worm gears or broken gears. X
Kettle continues heating after it reaches desired temperature.	User	a. Thermostat dial setting.
	Auth Service Rep Only	b. Thermostat calibration. X c. Thermostat operation. The thermostat should click when the dial is rotated to settings above and below the temperature of the kettle. X
Kettle stops heating before it reaches the desired temperature.	User	a. Thermostat dial setting.
	Auth Service Rep Only	b. Thermostat calibration. X c. Thermostat operation. The thermostat should click when the dial is rotated to settings above and below the temperature of the kettle. X
Safety Valve pops open.	User	a. For air in the jacket. See “Jacket Vacuum” in the Maintenance section. b. Thermostat dial setting.
	Auth Service Rep Only	c. For defective thermostat. The thermostat should click when the dial is rotated to settings above and below the temperature of the kettle. If defective, replace. X d. For defective safety valve. If the valve pops at pressures below 49 PSI, replace. X
Burners will not light.	User	a. That the main gas supply valve is open. (handle is in line with gas pipe). b. Gas supply to the building. c. That the kettle body is not tilted.
	Auth Service Rep Only	d. Thermostat operation. The thermostat should click when the dial is rotated to settings above and below the temperature of the kettle. X e. That tilt limit switch is closed when body is not tilted. X
System does not produce a spark.	Auth Service Rep Only	a. Thermostat, and close the contacts if they are open. X b. AC voltage between terminals on secondary side of transformer. If it is not 24 Volt, replace the transformer. X c. That the high tension cable is firmly attached and in good condition. If cracked or brittle, replace. X d. Pilot electric ceramic for crack or break. X e. Pilot spark gap. Regap. X

Troubleshooting

SYMPTOM	WHO	WHAT TO CHECK X indicates items which must be performed by an authorized technician.
Spark is present but the pilot will not light.	Auth Service Rep Only	a. That the pilot valve is securely connected to terminals. X b. For 24 VAC at terminals PV and PV/MV. If 24V is not present, replace the ignition control module. X b. That gas pressure is at least 3.5” W.C.(8.7818 b). X c. For gas at the pilot. If it is not flowing: (1) Check the pilot gas line for kinks and obstructions. X (2) Clean orifice, if necessary. X (3) Check magnetic operator for pilot valve on gas valve. Repair or replace as necessary. X d. That the pilot spark gap is located in the pilot gas stream. If not, adjust or replace the pilot burner. X e. For drafts. Shield the pilot burner, if necessary. X
Pilot lights, but main burner will not come on and spark does not stay on.	Auth Service Rep Only	a. For 24 V between terminals PV and PV/MV. If 24V is not present, replace the ignition control module. X b. That gas pressure is at least 3.5” W.C.(8.7818 b). X c. Electrical connections of the main valve to terminals, to a sure that they are securely attached. Check magnetic operator for pilot valve on gas valve. Repair or replace as necessary. X
Pilot lights, but main burner will not come on, the spark stays on.	Auth Service Rep Only	a. Check for bad burner ground. If necessary, repair with high temperature wire. X b. Pilot burner ceramic insulator for cracks. X c. That cable is not grounded out. If it is, correct the ground-out condition or replace cable. X d. For proper gas pressure. X e. Clean pilot assembly, or replace if necessary. X f. Tighten all mechanical and electrical connections. X g. If the pilot flame is weak, increase pilot orifice size. X h. Replace ignition control module. X
Main burner comes on but will not stay on.	Auth Service Rep Only	a. Check burner ground for bad wire or connection. Replace if necessary with high temperature wire. X b. Check for low gas supply pressure. If necessary, replace ignition control module. X

Parts List
Stand & Housing Assy. - Smaller Sizes

Key	Description	Part No.
A	STAND AND HOUSING ASSY.	123813
1	CABINET SIDE PANEL	047882
2	STAND CLADDING	MS96694
3	BASE ASSEMBLY	MS96698
4	HOUSING WELDMENT ASSY.	MS47332
5	HOUSING CLADDING, 20 GAL.	123810
5	HOUSING CLADDING, 40 AND 60 GAL.	123811
6	TRAY LINER	001475
7	NUT HEXAGON 1/2-13 HEAVY DUTY	005705
8	SCREW HEX HEAD CAP 1/2-13 X1-1/2	008679
9	1/2” LOCK WASHER	005735
10	SCREW TRUSS #8-32 X 3/8	005764
11	SCREW TRUSS #8-32 X 1-1/4 LG.	071247
12	CABINET COVER	001465

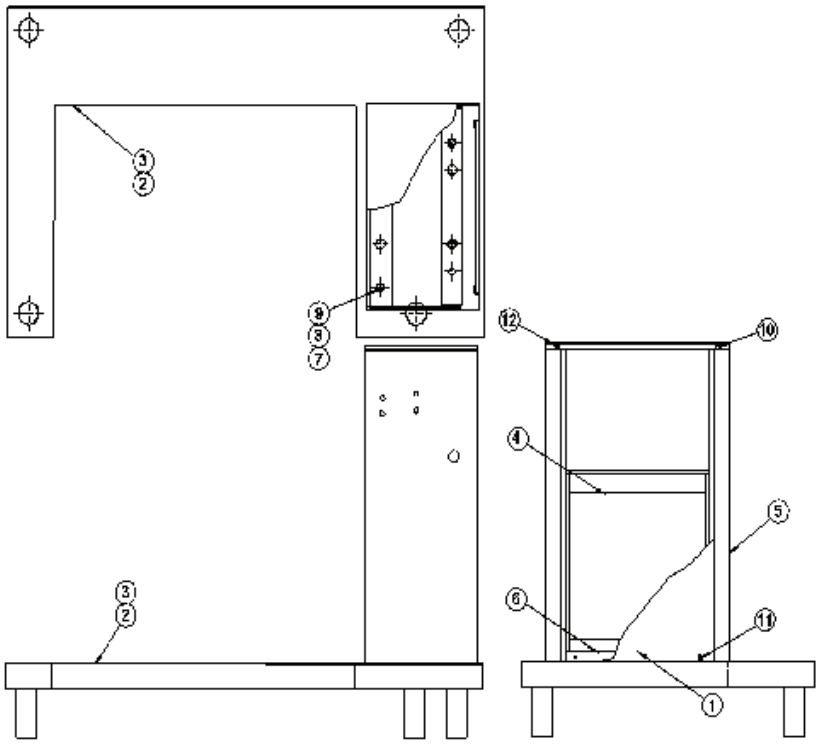

Parts List
Stand & Housing Assembly - 80 Gal.

Key	Description	Part No.
A	STAND & HOUSING ASSEMBLY	-
1	FRAME ASSEMBLY 80 GAL.	149257
2	WELDMENT, STAND CLADDING	149775
3	WELDMENT, PEDESTAL	149242
4	TRAY, LINER	150253
5	CLADDING, PEDESTAL ASSEMBLY	149241
6	COVER, TOP PEDESTAL CLADDING	150252
7	WASHER, PLAIN 1/2”	005049
8	WASHER LOCK 1/2”	005735
9	SCREW HEX HEAD CAP 1/2-13 X 1-1/2 LONG	008679
10	NUT HEXAGON 1/2”-13	005705
11	SCREW 8-32 X 3/8” LONG, TRUSS HEAD	005764
12	SCREW 8-32 X 1-3/8” LONG, TRUSS HEAD	081698
13	CABINET, SIDE PANEL	149273

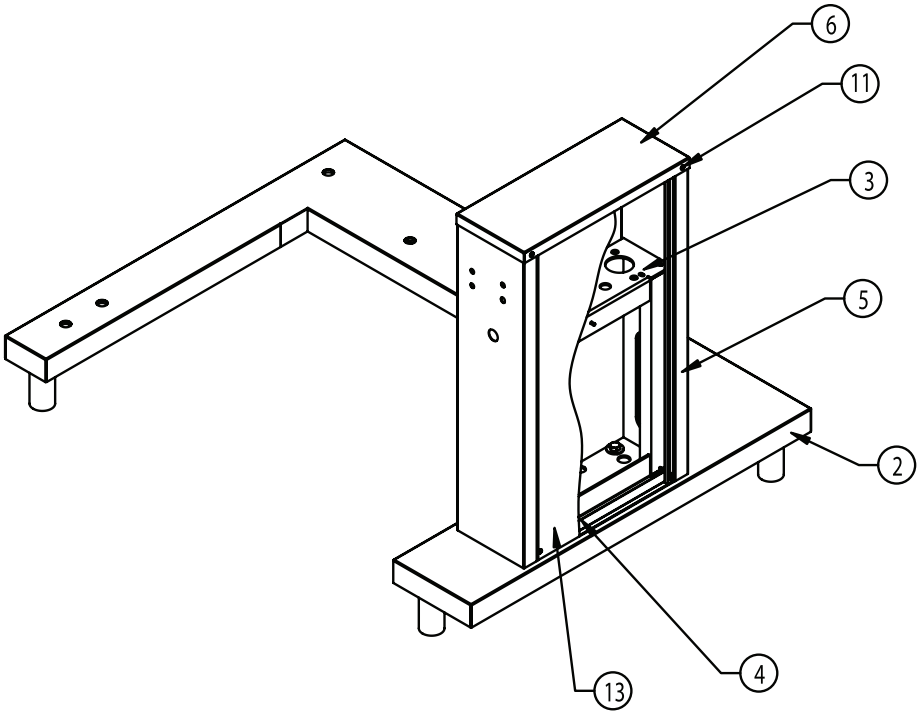

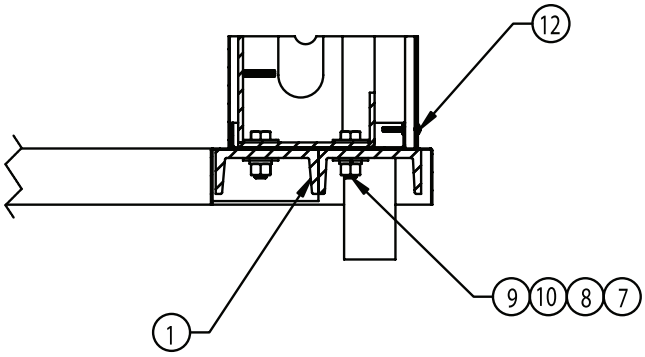

Parts List

Gas Valve Piping & Btm. Components Assembly Assy. - Smaller Sizes

Key	Description	Part No.
B	GAS VALVE PIPING & BOTTOM COMPS.	127369
1	TUBE, COPPER, 1/2”	007334
2	ELBOW, FEMALE, 90 DEG. 1/2 NPT	055634
3	THERMOSTAT, ELECTRIC	009730
4	ELBOW, 90 DEG 1/2 NPT	008747
5	NIPPLE, 1/2 NPT X 2-1/2” LONG	005552
6	ELECTRODE, WATER LEVEL	002170
7	TEE, 1/2 X 1/2 TUBE X 3/8 MPT	074593
8	CONNECTOR 1/4” NPT FEMALE	097074
9	PRESSURE SWITCH 1/4”	096963
10	CONNECTOR 1/2 NPT MALE	049093
11	GAS VALVE	123815
12	BRACKET SUPPORT	065382
13	SCREW, PAN HEAD #8-32 X 3/8”	005764
14	NUT, HEXAGON KEP 1/4	012940
16	BAR	005440
17	CLAMP, RIGID CONDUIT	068687
19	BOOT PROBE	101143
20	COVER, BOTTOM	049801
21	CAP BOTTOM COVER PLATE	049003
22	GASKET, BOTTOM PLATE	007937
23	SCREW, 10-32X3/8, HEX	069773
24	ELBOW, 1/8” NPT MALE X 1/4” TUBE	097195
25	TUBE, ALUMINUM 1/4” OD X 32”	006796

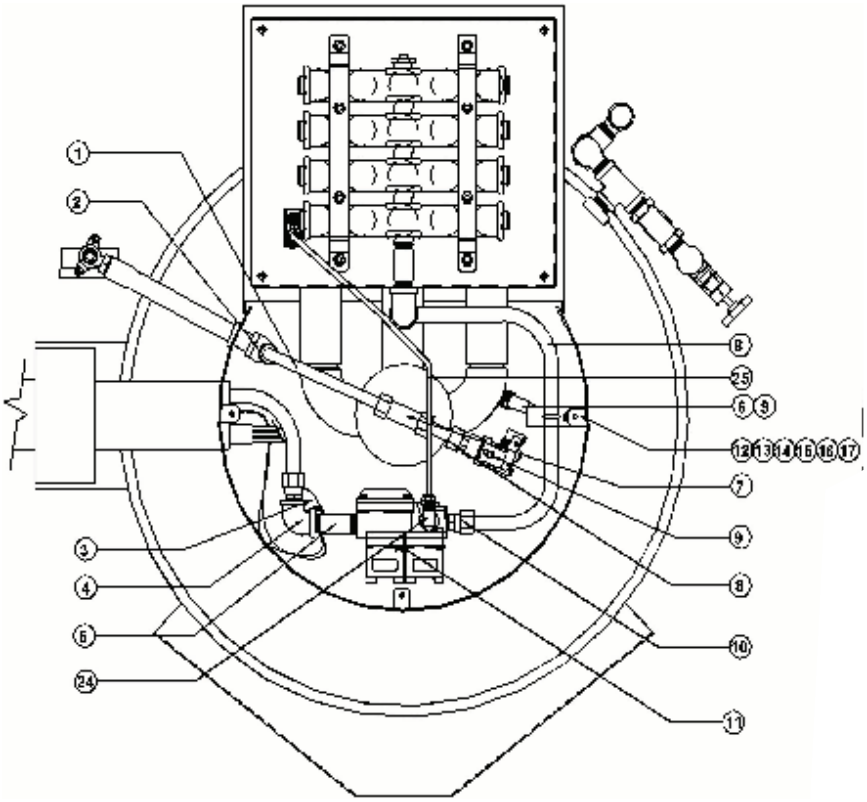

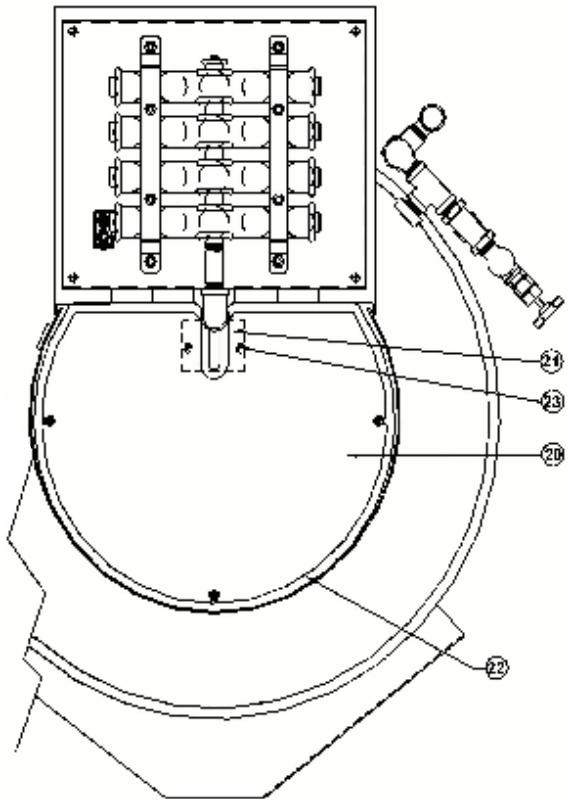

Parts List

Gas Valve Piping & Btm. Components Assembly Assy. - 80 Gal.

Key	Description	Part No.
B	GAS VALVE PIPING & BOTTOM COMPS.	-
1	TUBE, PILOT	150949
2	FITTING COMPRESSION	057217
3	TUBE, VALVE OUTLET. 80 GAL.	149765
4	ELECTRODE WATER LEVEL	076526
5	BRACKET SUPPORT	065382
6	SCREW PAN HEAD #8-32 X 3/8”	005764
7	NUT, HEXAGON KEEPS 1/4	012940
8	BAR	005440
9	CLAMP, RIGID CONDUIT	068687
10	SWITCH PRESSURE 1/4 NPT	096963
11	FITTING COMPRESSION	049093
12	FITTING COMPRESSION 90	004584
13	VALVE, GAS JOHNSON CON-TROLS	123815
14	TUBE 3/8” X 3”, COOPER	149766
15	TUBE, VALVE INLET. 80 GAL.	149767
16	THERMOSTAT, ELECTRIC	009730
17	ELBOW 90 DEG 1/2” NPT	008747
18	SCREW, #10-32 X 3/8, HEX.	069773
19	CAP BOTTOM COVER PLATE	049803
20	GASKET, BOTTOM PLATE	007937
21	COVER, BOTTOM	149774

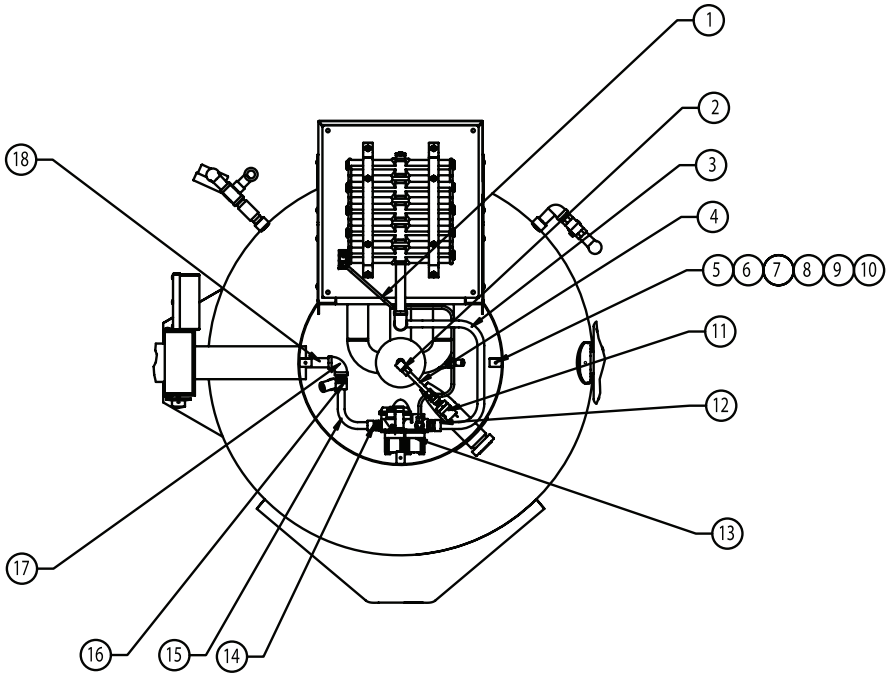

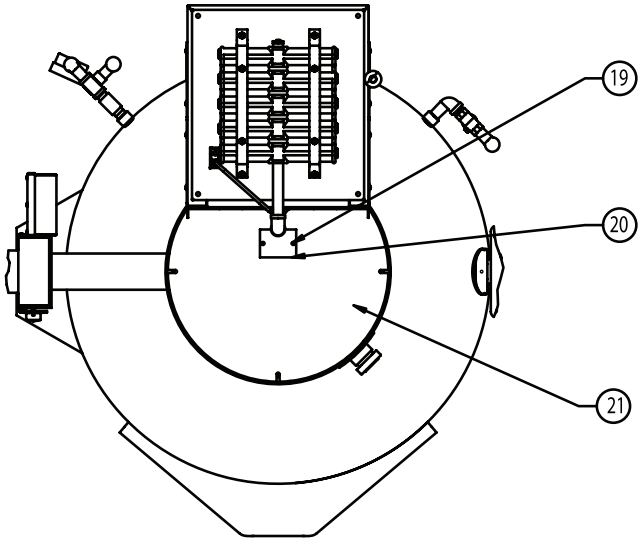

Parts List
Burner & Flame Sensor Assembly

Key	Description	Part No.
C	BURNER AND FLAME SENSOR ASSY. - 40 GAL.	123814
1	BAFFLE PLATE	123498
2	WASHER LOCK	005655
3	NUT HEX	005601
4	BURNER BRACKET SUPPORT	1017010
5	BURNER BRACKET	117013
6	BURNER ASSEMBLY - 60 GAL.	090644
7	PILOT BURNER ASSEMBLY	123580

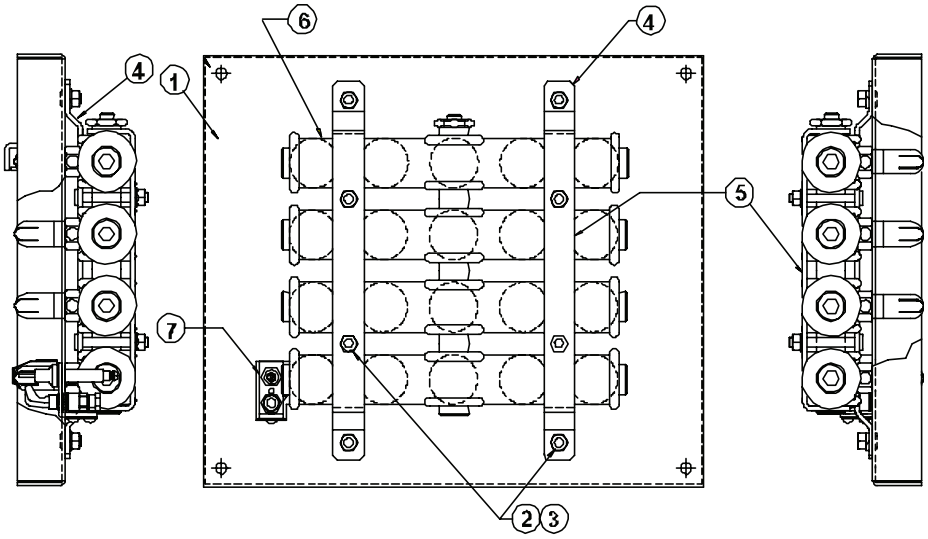

Parts List
Flue Stack Assembly - Smaller Sizes

Key	Description	Part No.
E	FLUE STACK ASSEMBLY	117034
1	FLUE, TOP SECTION OF TOP PLATE	117029
2	FLUE, BOTTOM SECTION OF TOP PLATE	117033
3	FLUE, FRONT SECTION	117032
4	FLUE, MAIN BODY	117031
5	SCREW, TRUSS HEAD	072189

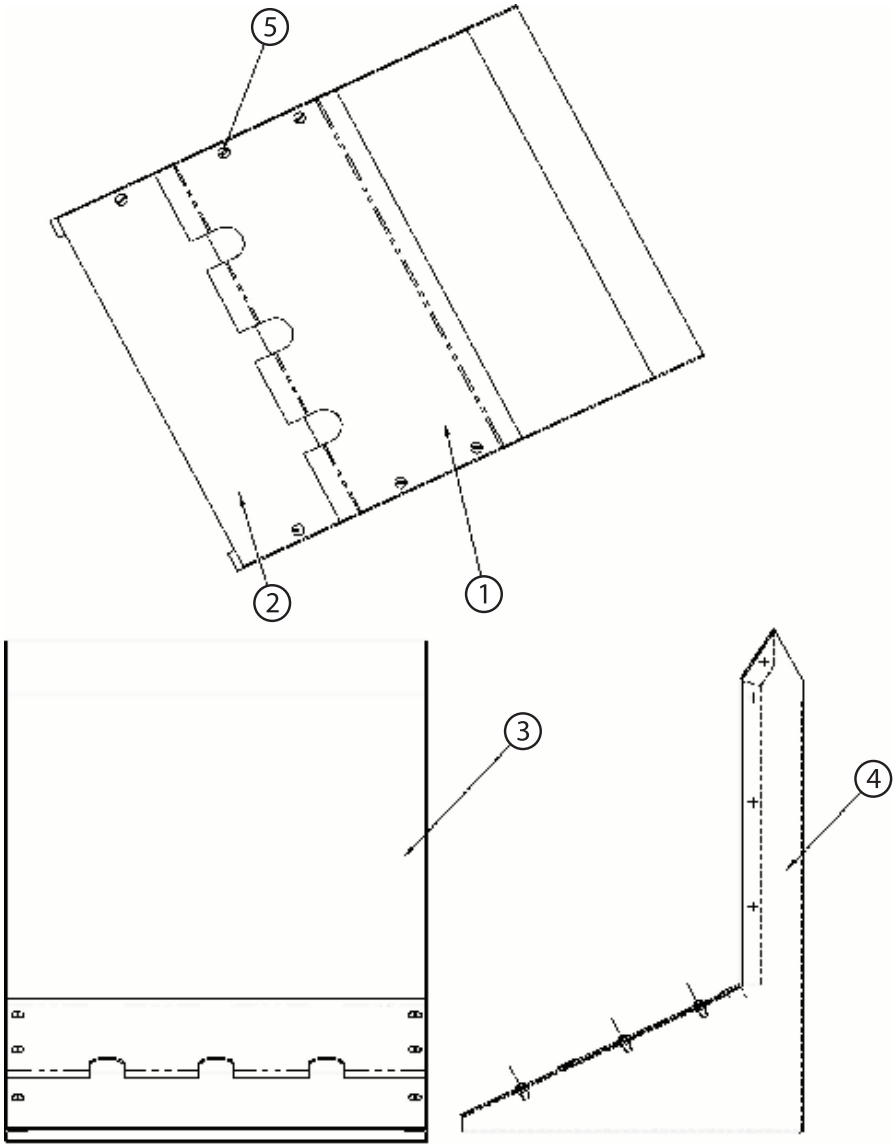

Parts List
Flue Stack Assembly - 80 Gal.

Key	Description	Part No.
E	FLUE STACK ASSEMBLY	-
1	ASSY. FLUE STACK MAIN BODY	149220
2	FLUE, FRONT PANEL. WELDMENT	150927
3	FLUE STACK, BOTTOM SECTION	149236
4	FLUE, TOP SECTION	149222
5	SCREW TRUSS HEAD MACHINED 10-32 X 1/2” L.	072189

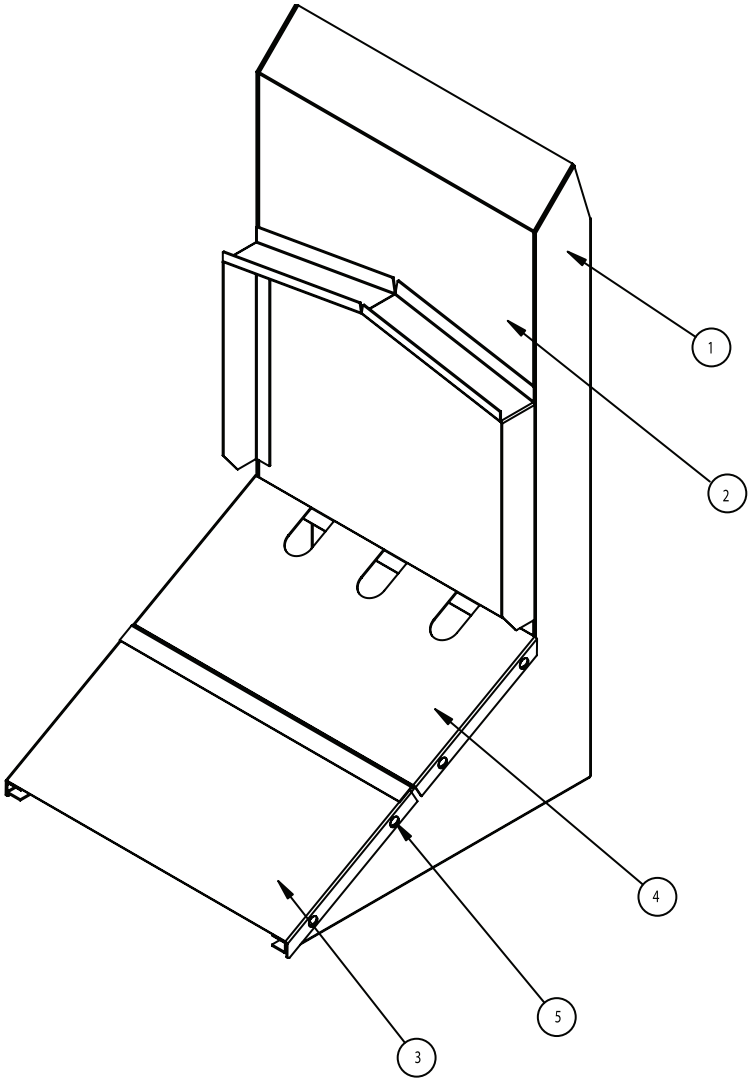

Parts List
Electrical Panel

Key	Description	Part No.
-	ELECTRICAL PANEL	123736
1	WATER LEVEL CONTROL	122192
2	TRANSFORMER 75A 24V SEC., 120V PRI	106233
	TRANSFORMER 75A 24V SEC., 208/240V PRI	106234
3	SCREW, BUTTON HEAD #8-32 X 0.25 LG	096317
4	TERMINAL BLOCK, 2 POLE #4 - #18 AWG	003887
6	FUSE HOLDER 3AG W/0. 1875 QUICK CON.	077854
7	SCREW, ROUND HD #6-32 X 0.1875 LG	058599
8	LUG, GROUND, 14-6 AWG	119829
9	SCREW, ROUND HD #8-32 X 1.25 LG	005056
10-14	VOLTAGE PHASE, GROUND, WARNING & ELECTRICAL SUPPLY LABELS	varied
15	FUSE, 30 AMP, 3 AG	077853
16	ELECTRICAL PANEL	123735
17	NUT, HEX, KEPS #10-32 W/ SHAKEPROOF WASHER	071256

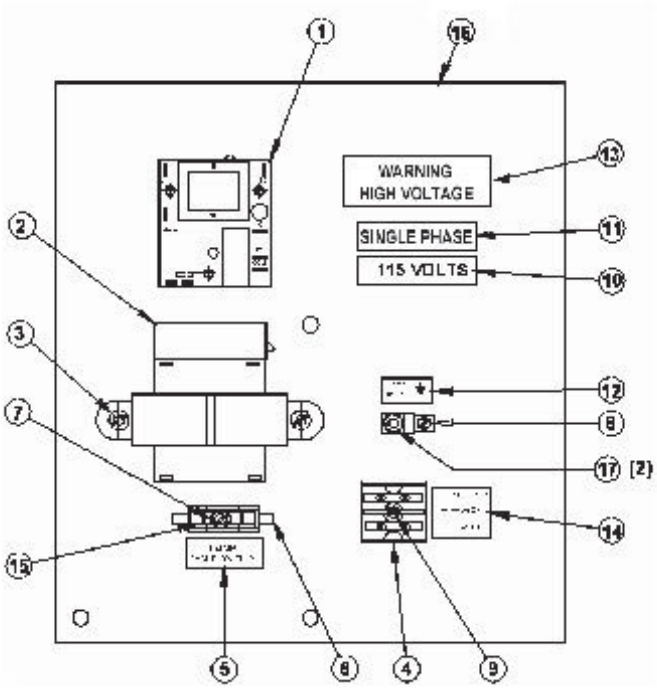

Parts List
Arm & Module Box Assembly

Key	Description	Part No.
-	ARM AND MODULE BOX ASSEMBLY	127734
1	CONDUIT NUT, 1/2”	005487
2	SCREW #8-32 X 3/8”	005764
3	BOX, SPARK IGNITION MODULE	123775
4	GASKET, IGNITION MODULE BOX	104941
5	SPARK IGNITION MODULE	085153
6	HEX NUT W/SHAKEPROOF WASHER	071289
7	CONDUIT, PLASTIC, MALE ADAPTER 1/2”	123733
8	COVER, IGNITION MODULE BOX	104948
9	HEX NUT W/SHAKEPROOF WASHER	069784
10	TIE ANCHOR - SCREW MOUNTED	102231
11	CABLE TIE, 0.140 WIDE LOCKING	086426
12	SCREW #10= 32 X 0.375 LONG	069773

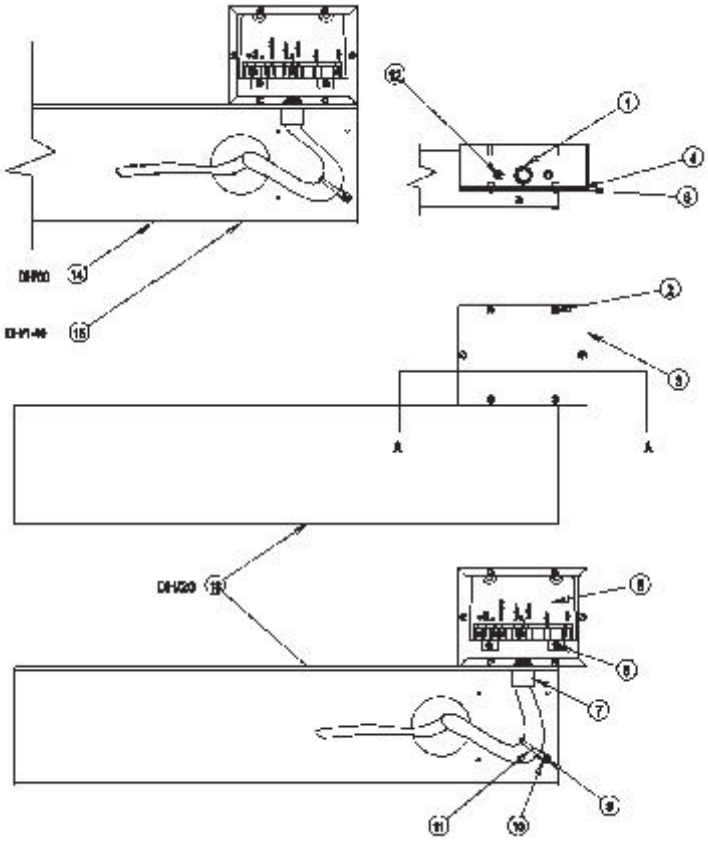

Service Log

Model No:	Purchased From:
Serial No:	Location:
Date Purchased:	Date Installed:
Purchase Order No:	For Service Call:

Date	Maintenance Performed	Performed By

Service Log

Model No:	Purchased From:
Serial No:	Location:
Date Purchased:	Date Installed:
Purchase Order No:	For Service Call:

Date	Maintenance Performed	Performed By

BLODGETT OVEN COMPANY

www.blodgett.com

44 Lakeside Avenue, Burlington, Vermont 05401 USA
Telephone: 866-518-3977

PART NUMBER 170097 REV B (04/11)