BLODGETT®

Synergy Steam

E-KLT

Electric Floor Model Tilting Kettle

OPTIONS AND ACCESSORIES

(AT ADDITIONAL CHARGE)

- **Etched markings**
  - ❑ Gallons
  - ❑ Litres
- **Strainers**
  - ❑ 1/8” perforated disc strainer
  - ❑ 1/4” perforated disk strainer
  - ❑ Solid disc strainer
  - ❑ Lip strainers
- **Drawoff Valves**
  - ❑ 2” tangent drawoff
  - ❑ 3” tangent drawoff
- **Faucets**
  - ❑ Single pantry faucet
  - ❑ Double pantry faucet
- **Covers**
  - ❑ Lift off cover
  - ❑ Hinged cover kit
- ❑ Basket inserts
- ❑ Pan carrier for 40 and 60 gallon kettles
- ❑ Kettle brush kit
- ❑ Contour measuring strip

UL® NSF®

Project _____

Item No. _____

Quantity _____

- ❑ Model 20E-KLT - 20 gallon (76 litres) electric tilting floor kettle
- ❑ Model 40E-KLT - 40 gallon (151 litres) electric tilting floor kettle
- ❑ Model 60E-KLT - 60 gallon (227 litres) electric tilting floor kettle

CONSTRUCTION

- 316 stainless steel, one-piece welded construction
- 2/3 jacketed kettle
- All exposed surfaces shall be stainless steel
- Kettle body is sheathed in stainless steel and air gap insulated.
- ASME shop inspected, stamped and registered with the National Board for operation up to a maximum working pressure of 50 PSI.
- Outer sheathing and air insulating gap retains heat and keeps kettle exterior cooler to the touch.
- Heavy-duty stainless steel combination kettle support tilt trunnion on an enclosed base.
- Stainless steel tubular legs with adjustable bullet feet
- Heavy reinforced bar rim with a welded-in butterfly shaped pouring lip for pouring control and durability

OPERATION

- Kettle shall have an electric, self-contained steam source to provide kettle temperatures from 150°F to approximately 295°F
- Thermostatically controlled to shut off automatically when desired temperature is reached or on when temperature falls below desired setting
- Factory charged with chemically-pure water and rust inhibitors to ensure long life and minimum maintenance
- Smooth operating, self-locking tilt mechanism
- All controls shall be contained in a stainless steel enclosure within easy reach of the operator
- Thermostat
- Built in contactor
- Safety tilt cutoff
- Pilot light
- Pressure gauge
- Water level sight glass
- Safety valve
- Low water cut-off
- Heat indicator light

STANDARD FEATURES

- Faucet bracket
- Removable 1/4” perforated stainless steel strainer
- Standard voltage options
  - ❑ 208 VAC, 3 phase, 60 Hz
  - ❑ 240 VAC, 3 phase, 60 Hz
  - ❑ 480 VAC, 3 phase, 60 Hz
- One year parts and labor warranty*

* *For all international markets, contact your local distributor.*

BLODGETT
44 Lakeside Avenue, Burlington, VT 05401
Phone: (802) 658-6600 • Fax: (802) 864-0183

E-KLT FLOOR MODEL TILTING KETTLE

E-KLT FLOOR MODEL TILTING KETTLE

APPROVAL/STAMP

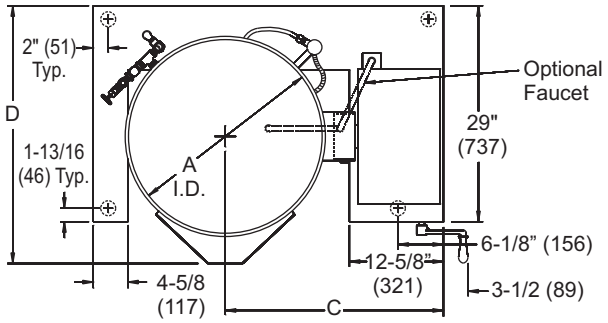

TOP VIEW

NOTES:
1. Dimensions are in inches (mm).

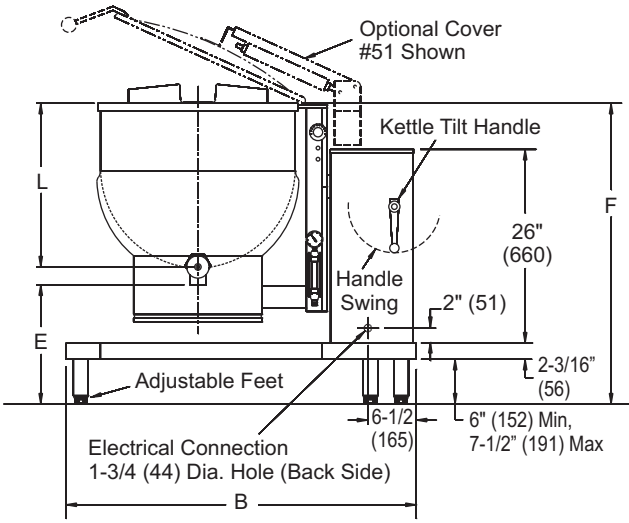

FRONT VIEW

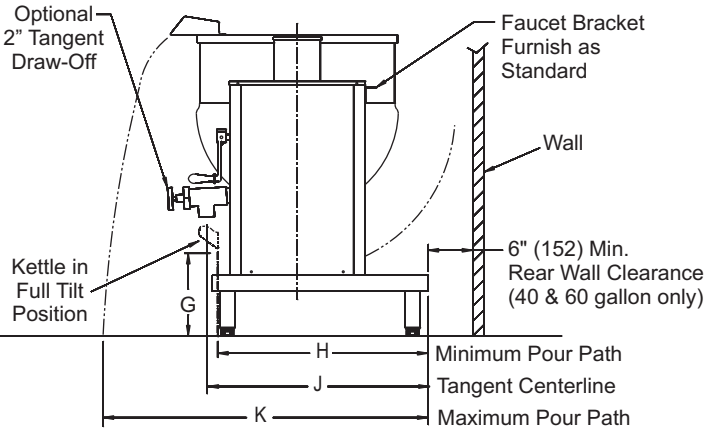

RIGHT SIDE VIEW

SHORT FORM SPECIFICATIONS

Provide Blodgett model 20E-KLT (20 gallon), 40E-KLT (40 gallon) and 60E-KLT (60 gallon) electric heated, stainless steel, steam jacketed kettle. Unit shall stainless steel construction with reinforced bar rim, butterfly shaped pouring lip and smooth action mechanical tilt. Kettle body shall be mounted in heavy duty stainless steel combination kettle support tilt trunnion, which is supported by stainless steel enclosed base. NSF listed, ASME code constructed for 50 PSI and UL listed. Provide options and accessories as indicated.

		208V		240V		480V	
Model	Phase	kW	Amps	kW	Amps	kW	Amps
20E-KLT	1	10.8	52	14.4	60	12.0	25
	3		30		35		15
40E-KLT	1	21	101	24	105	24	50
	3		59		61		29
60E-KLT	1	21	101	24	105	24	50
	3		59		61		29

	20E-KLT	40E-KLT	60E-KLT
A	20 (508)	26 (660)	30 (762)
B	35 (889)	47 (1194)	47 (1194)
C	26 (660)	29 (737)	31 (787)
D	30.75 (781)	34.5 (876)	36.38 (924)
E	18.5 (470)	15.25 (387)	13.25 (337)
F	39.38 (1000)	40.38 (1026)	44.13 (1121)
G	16 (406)	12.25 (311)	10.38 (264)
H	28 (711)	29.5 (749)	31.5 (800)
J	28.25 (718)	29.5 (749)	29.5 (749)
K	55 (1397)	57.5 (1460)	61.5 (1562)
L	18.5 (470)	22 (559)	25 (635)

SHIPPING INFORMATION:

Approx. Weight:

20E-KLT 490 lbs. (222 kg)
40E-KLT 626 lbs. (284 kg)
60E-KLT 645 lbs. (293 kg)

NOTE: *The company reserves the right to make substitutions of components without prior notice.*

BLODGETT
44 Lakeside Avenue, Burlington, VT 05401 • Phone: (802) 658-6600 • Fax: (802) 864-0183