BUNN®

FMD-1

(prior to S/N FMD0013000)

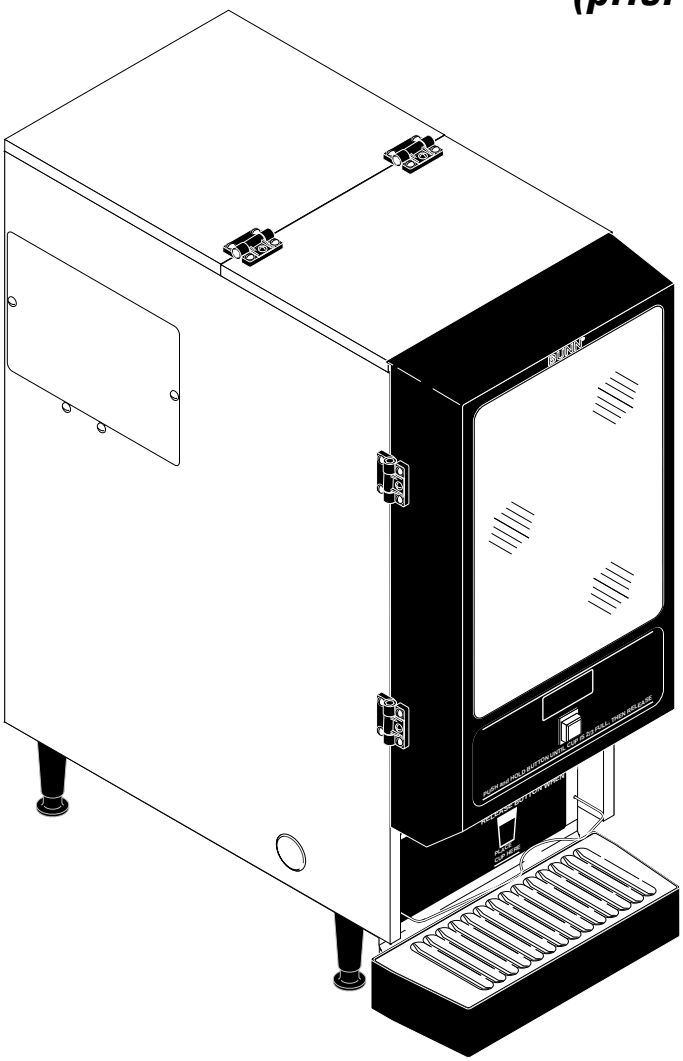

OPERATING & SERVICE MANUAL

BUNN-O-MATIC CORPORATION

POST OFFICE BOX 3227
SPRINGFIELD, ILLINOIS 62708-3227
PHONE: (217) 529-6601 FAX: (217) 529-6644

28364.0001 5/00 ©1998 Bunn-O-Matic Corporation

INTRODUCTION

This equipment dispenses hot beverages on demand from powered product. It is for indoor use only on a sturdy counter or shelf.

WARRANTY

Bunn-O-Matic Corp. ("Bunn") warrants the equipment manufactured by it to be commercially free from defects in material and workmanship existing at the time of manufacture and appearing within one year from the date of installation. In addition:

1.) Bunn warrants electronic circuit and/or control boards to be commercially free from defects in material and workmanship for two years from the date of installation.

2.) Bunn warrants the compressor on refrigeration equipment to be commercially free from defects in material and workmanship for two years from the date of installation.

3.) Bunn warrants that the grinding burrs on coffee grinding equipment will grind coffee to meet original factory screen sieve analysis for three years from date of installation or for 30,000 pounds of coffee, whichever comes first.

This warranty does not apply to any equipment, component or part that was not manufactured by Bunn or that, in Bunn's judgement, has been affected by misuse, neglect, alteration, improper installation or operation, improper maintenance or repair, damage or casualty.

THE FOREGOING WARRANTY IS EXCLUSIVE AND IS IN LIEU OF ANY OTHER WARRANTY, WRITTEN OR ORAL, EXPRESS OR IMPLIED, INCLUDING, BUT NOT LIMITED TO, ANY IMPLIED WARRANTY OF EITHER MERCHANTABILITY OR FITNESS FOR A PARTICULAR PURPOSE. The agents, dealers or employees of Bunn are not authorized to make modifications to this warranty or to make additional warranties that are binding on Bunn. Accordingly, statements by such individuals, whether oral or written, do not constitute warranties and should not be relied upon.

The Buyer shall give Bunn prompt notice of any claim to be made under this warranty by telephone at (217) 529-6601 or by writing to Post Office Box 3227, Springfield, Illinois, 62708-3227. If requested by Bunn, the Buyer shall ship the defective equipment prepaid to an authorized Bunn service location. If Bunn determines, in its sole discretion, that the equipment does not conform to the warranty, Bunn shall repair the equipment with no charge for parts during the warranty period and no charge for labor by a Bunn Authorized Service Representative during the warranty period. If Bunn determines that repair is not feasible, Bunn shall, at its sole option, replace the equipment or refund the purchase price for the equipment.

THE BUYER'S REMEDY AGAINST BUNN FOR THE BREACH OF ANY OBLIGATION ARISING OUT OF THE SALE OF THIS EQUIPMENT, WHETHER DERIVED FROM WARRANTY OR OTHERWISE, SHALL BE LIMITED, AS SPECIFIED HEREIN, TO REPAIR OR, AT BUNN'S SOLE OPTION, REPLACEMENT OR REFUND.

In no event shall Bunn be liable for any other damage or loss, including, but not limited to, lost profits, lost sales, loss of use of equipment, claims of Buyer's customers, cost of capital, cost of down time, cost of substitute equipment, facilities or services, or any other special, incidental or consequential damages.

USER NOTICES

Carefully read and follow all notices on the equipment and in this manual. They were written for your protection. All notices are to be kept in good condition. Replace any unreadable or damaged labels.

28328.0002

⚠WARNING

- Fill water tank before turning -on thermostat or connecting appliance to power source.
- Use only on a properly protected circuit capable of the rated load.
- Electrically ground the chassis.
- Follow national/local electrical codes.
- Do not use near combustibles.

FAILURE TO COMPLY RISKS EQUIPMENT DAMAGE, FIRE, OR SHOCK HAZARD

READ THE ENTIRE OPERATING MANUAL BEFORE BUYING OR USING THIS PRODUCT

THIS APPLIANCE IS HEATED WHENEVER CONNECTED TO A POWER SOURCE

00831.0000F 3/98 © 1988 BUNN-O-MATIC CORPORATION

00831.0000

This equipment is to be installed to comply with the Basic Plumbing Code of the Building Officials and Code Administrators International, Inc. (BOCA) and the Food Service Sanitation Manual of the Food and Drug Administration (FDA).

00656.0000

CONTROL THERMOSTAT ADJUSTMENT

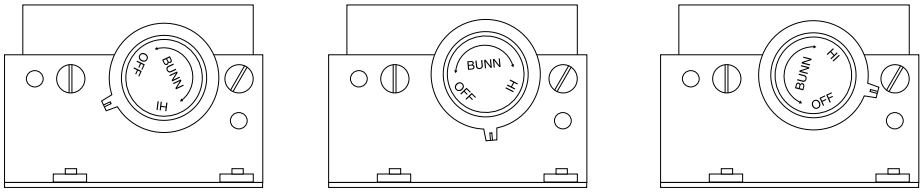

200° F 190° F 180° F

APPROXIMATE THERMOSTAT TEMPERATURE SETTINGS

28368.0000A 10/97 © 1997 BUNN-O-MATIC CORPORATION

28368.0000

28301.0001

INITIAL SET-UP

1. Locate the drip tray assembly beneath the dispenser nested in the packing material.
2. Remove the drip tray and the drip tray cover and set them aside.
3. Remove the water strainer assembly from the drip tray and set it aside.
4. Remove the four legs from the drip tray, apply non-skid pads to the bottom of the legs and securely install the legs in the dispenser base.

ELECTRICAL REQUIREMENTS

CAUTION - The dispenser must be disconnected from the power source until specified in *Initial Set-Up.*

The 120 volt version of this dispenser has an attached cordset and requires 2-wire, grounded service rated 120 volts ac, 15 amp, single phase, 60 Hz. The mating connector must be a NEMA 5-15R.

The 120/208 and the 120/240 versions of this dispenser has an attched cordset. The mating connector must be a NEMA 14-20R.

(*Refer to the dispenser's dataplate for exact voltage requirement.)*

ELECTRICAL HOOK-UP

CAUTION – Improper electrical installation will damage electronic components.

1. An electrician must provide electrical service as specified.
2. Using a voltmeter, check the voltage and color coding of each conductor at the electrical source.
3. Open the front door of the dispenser and place the heater switch in the "OFF" (upper position).
4. Connect the dispenser to the power source.
5. If plumbing is to be hooked-up later be sure the dispenser is disconnected from the power source. If plumbing has been hooked-up, the dispenser is ready for *Initial Fill & Heat.*

PLUMBING REQUIREMENTS

This dispenser must be connected to a **COLD WATER** system with operating pressure between 20 and 90 psi (138 and 620 kPa) from a ½" or larger supply line. A shut-off valve should be installed in the line before the dispenser. Install a regulator in the line when pressure is greater than 90 psi (620 kPa) to reduce it to 50 psi (345 kPa). The water inlet fitting is ¼" flare.

NOTE - Bunn-O-Matic recommends ¼" copper tubing for installations of less than 25 feet and ⅜" for more than 25 feet from the ½" water supply line. At least 18 inches of an FDA approved flexible beverage tubing, such as reinforced braided polyethylene or silicone, before the brewer will facilitate movement to clean the countertop. It can be purchased direct from Bunn-O-Matic (part number 00326-0000). Bunn-O-Matic does not recommend the use of a saddle valve to install the brewer. The size and shape of the hole made in the supply line by this type of device may restrict water flow

This equipment must be installed to comply with the Basic Plumbing Code of the Building Officials and Code Administrators International, Inc. (BOCA) and the Food Service Sanitation Manual of the Food and Drug Administration (FDA).

PLUMBING HOOK-UP

1. Securely attach the short piece of tubing on the water strainer assembly to the inlet fitting on the bottom of the dispenser.
2. Flush the water line and securely attach it to the flare fitting on the water strainer assembly.
3. Turn-on the water supply.

INITIAL FILL & HEAT

CAUTION - The dispenser must be disconnected from the power source throughout the initial set-up, except when specified in the instructions.

1. Turn-on the water supply and connect the dispenser to the power source.
2. Water will automatically flow into the tank to the proper level and then shut-off. This will take less than five minutes.
3. When the tank is full of water, open the front door and place the heater switch in the "ON" (lower) position. A tank full of cold water will take approximately forty minutes for the water to heat on 120 volt versions.

During this waiting period, complete these dispenser set-up steps:

a. Place the drip tray in front of the dispenser. Set the drip tray cover in place.
b. Place a set of keyholes in the cup locator plate over the screws beneath the hopper access door and push down gently.
c. Fill the hopper with the dry product to be dispensed.

DISPENSER USE

1. Simply place a cup on the drip tray beneath the dispensing tip.
2. Press the button to froth and dispense the beverage.
3. Release the button when the cup is approximately $^{2}/_{3}$ full and allow the mixing chamber to drain.

NOTE - The mixing chamber must drain at the end of each dispense.

CLEANING

Refer to the decal inside the hopper access door for cleaning recommendations and procedures.

The use of a damp cloth rinsed in any mild, non-abrasive, liquid detergent is recommended for cleaning all surfaces on Bunn-O-Matic equipment.

ADJUSTMENTS

The beverage solenoid is preset to dispense approximately one ounce per second. This amount can be adjusted:

1. Disconnect the dispenser from the power source.
2. Remove the left side access panel.
3. Rotate the control at the base of the solenoid clockwise to decrease or counterclockwise to increase the amount of water.

DRAINING THE HOT WATER TANK

CAUTION - The dispenser must be disconnected from the power source throughout these steps.

1. Disconnect the dispenser from the power source.
2. Open front door and place tank heater switch in the “OFF” (upper) position.
3. Shut-off and disconnect the incoming water supply.
4. Remove the top panel.
5. Gently remove one of the grommets from the tank lid.
6. Insert a tube to the bottom of the tank and syphon ALL of the water out.
   (Bunn-O-Matic has a syphon assembly #12440.0000 available for this purpose.)

NOTE - The dispenser must be refilled using the INITIAL FILL & HEAT steps before reconnecting to the power source.

HOPPER DISPENSE RATE OF PRODUCT

1. Hopper dispense rate with 8 tooth gear and auger wire is approximately 4 to 6 grams per second.
2. Hopper dispense rate with optional 12 tooth gear and auger wire is 6 to 9 grams per second.

TROUBLESHOOTING

A troubleshooting guide is provided to suggest probable causes and remedies for the most likely problems encountered. If the problem remains after exhausting the troubleshooting steps, contact the Bunn-O-Matic Technical Service Department.

- Inspection, testing, and repair of electrical equipment should be performed only by qualified service personnel.
- All electronic components have 120 volt ac and low voltage dc potential on their terminals. Shorting of terminals or the application of external voltages may result in board failure.
- Intermittent operation of electronic circuit boards is unlikely. Board failure will normally be permanent. If an intermittent condition is encountered, the cause will likely be a switch contact or a loose connection at a terminal or crimp.
- Solenoid removal requires interrupting the water supply to the valve. Damage may result if solenoids are energized for more than ten minutes without a supply of water.
- The use of two wrenches is recommended whenever plumbing fittings are tightened or loosened. This will help to avoid twists and kinks in the tubing.
- Make certain that all plumbing connections are sealed and electrical connections tight and isolated.
- This unit is heated at all times. Keep away from combustibles.

WARNING –
- Exercise extreme caution when servicing electrical equipment.
- Unplug the dispenser when servicing, except when electrical tests are specified.
- Follow recommended service procedures
- Replace all protective shields or safety notices

PROBLEM	PROBABLE CAUSE	REMEDY
Product will not dispense	1. No water	Water lines and valves to the dispenser must be open.
	2. No power or incorrect voltage to the dispenser	(A1) Check the outlet for 120 volts on two wire 120 volt dispenser. (A2) Check the outlet for 120 volts on three wire 120/240 volt dispenser. (B) Check circuit breakers or fuses.
	3. Dispense switch	Refer to *Service* - Dispense Switch for testing procedure. See page 16
	4. Dispense solenoid valve	Refer to *Service* - Dispense solenoid valve for testing procedures. See page 26

TROUBLESHOOTING (cont.)

PROBLEM	PROBABLE CAUSE	REMEDY
Product will not dispense (cont.)	5. Solenoid valve (inlet)	Refer to *Service* - Solenoid Valve (Inlet) for testing procedures. See page 27
	6. Level control board and probe	Refer to *Service* - Level Control Board and Probe for testing procedures. See page 22
	7. Overflow protection switch	Refer to *Service* - Overflow protection switch for testing procedures. See page 24
	8. Auger drive	Refer to *Service* - Auger Drive. See page 12
	9. Water strainer	(A) Direction of flow arrow must be pointing towards brewer. (B) Remove the strainer and check for obstructions. Clear or replace.
	10. Lime build-up **CAUTION -** Tank and tank components should be delimed regularly depending on local water conditions. Excessive mineral build-up on stainless steel surfaces can initiate corrosive reactions resulting in serious leaks.	Inspect the tank assembly for excessive lime deposits. Delime as required.
Water is not hot	1. Limit thermostat **CAUTION -** Do not eliminate or bypass limit thermostat. Use only BOM replacement part #29329.1000	Refer to *Service* - Limit Thermostat for testing procedures. See page 24
	2. Control thermostat	Refer to *Service* - Control Thermostat for testing procedures. See page 15
	3. Tank Heater	Refer to *Service* - Tank Heater for testing procedures. See page 28

TROUBLESHOOTING (cont.)

PROBLEM	PROBABLE CAUSE	REMEDY
Water is not hot (Cont.)	4. Tank heater switch	Refer to *Service* - Tank Heater Switch for testing procedures. See page 29
Spitting or excessive steaming	1. Lime build-up **CAUTION -** Tank and tank components should be delimed regularly depending on local water conditions. Excessive mineral build-up on stainless steel surfaces can initiate corrosive reactions resulting in serious leaks.	Inspect tank assembly for excessive lime deposits. Delime as required.
	2. Control thermostat	Refer to *Service* - Control Thermostat for testing procedures. See page 15
Dripping from dispense tip	1. Lime build-up **CAUTION -** Tank and tank components should be delimed regularly depending on local water conditions. Excessive mineral build-up on stainless steel surfaces can initiate corrosive reactions resulting in serious leaks.	Inspect the tank assembly for excessive lime deposits. Delime as required.
	2. Dispense solenoid valve	Remove the dispense solenoid valve and clear any obstructions. Rebuild or replace the valve if necessary. See page 26
Water flows into tank continuously	1. Level control board and probe	Refer to *Service* - Level Control Board and Probe for testing procedures. See page 22
	2. Solenoid valve (Inlet)	Refer to *Service* - Solenoid Valve (Inlet) for testing procedures. See page 27
	3. Overflow Protection Switch	Refer to *Service* - Overflow Protection Switch for testing procedures. See page 24

TROUBLESHOOTING (cont.)

PROBLEM	PROBABLE CAUSE	REMEDY
Product overflows container	1. Dispense switch	Refer to *Service* - Dispense Switch for testing procedures. See page 16
	2. Dispense solenoid valve	Remove the solenoid valve and clear any obstructions. Rebuild or replace the valve if necessary. See page 26
Weak product	1. Water temperature	Place an empty container beneath the dispense tip. Initiate a dispense cycle and check the water temperature immediately below the dispense tip with a thermometer. (A) Reading for mechanical thermostat models should be 180°F to 200°F (see thermostat temperature settings decal in *USER NOTICES* on page 3.)
	2. Whipper motor	Refer to *Service* - Whipper Motor for testing procedure. See page 18
	3. Frother	Refer to *Service* - Frother Components. See page 18
	4. Dispense solenoid valve	Refer to *Service* - Dispense Solenoid Valve for test procedures. See page 26
	5. Auger drive	Refer to *Service* - Auger Drive Components. See page 12
	6. Auger spring	Refer to *Service* - Auger Drive Components. See page 12
	7. Auger motor	Refer to *Service* - Auger Drive Components. See page 12
	8. Rinse/Run switch	Refer to *Service* - Rinse/Run Switch for test procedures. See page 25

TROUBLESHOOTING (CONT.)

PROBLEM	PROBABLE CAUSE	REMEDY
Dispenser is making unusual noises	1. Plumbing Lines	Plumbing lines should not be resting on the counter top.
	2. Water Supply	(A) The dispenser must be connected to a cold water line (B) Water pressure to the dispenser must not exceed 90 psi (620 kPa). Install a regulator if necessary to lower the working pressure to approximately 50 psi (345 kPa).
	3. Tank Heater	Remove and clean lime off the tank heater. See page 28
Excess dust	1. Fan	Refer to *Service* - Fan for testing procedures. See page 17
	2. Hopper Delay Board	Refer to *Service* - Hopper Delay Board for testing procedures. See page 20
Display not lit	1. Lamp	Refer to *Service* - Lamp, see page 21 for lamp replacement.
	2. Lamp Holder	Refer to *Service* - Lamp Holder for testing procedures. See page 21
	3. Starter - Lamp	Refer to *Service* - Starter for testing procedures. See page 22
	4. Ballast	Refer to *Service* - Ballast for testing procedures. See page 14

SERVICE

This section provides procedures for testing and replacing various major components used in this dispenser should service become necessary. Refer to *Troubleshooting* for assistance in determining the cause of any problem.

WARNING - Inspection, testing, and repair of electrical equipment should be performed only by qualified service personnel. The dispenser should be unplugged when servicing, except when electrical tests are required and the test procedure specifically states to plug-in the dispenser.

COMPONENT ACCESS

WARNING - Disconnect the dispenser from the power source before the removal of any panel or the replacement of any component.

All components are accessible by opening the door, removal of the door panels, dispenser top covers, hopper, hopper suppor plate, splash guard, splash panel w/drip tray, lower front access panel, side and rear access covers.

Refer to the contents listing for component location.

Contents

Auger Drive Components 12
Auger Motor 12
Ballast 14
Control Thermostat 15
Dispense Switch 16
Fan 17
Frother 18
Hopper Delay Board 20
Lamp Holder 21
Lamp 21
Lamp Starter and Socket 22
Level Control Board and Level Probe 22
Limit Thermostat 24
Overflow Protection Switch 24
Rinse/Run Switch 25
Solenoid (Dispense) 26
Solenoid (Inlet) 27
Tank Heater 28
Tank Heater Switch 29
Whipper Motor 18
Wiring Diagram 30

AUGER DRIVE COMPONENTS

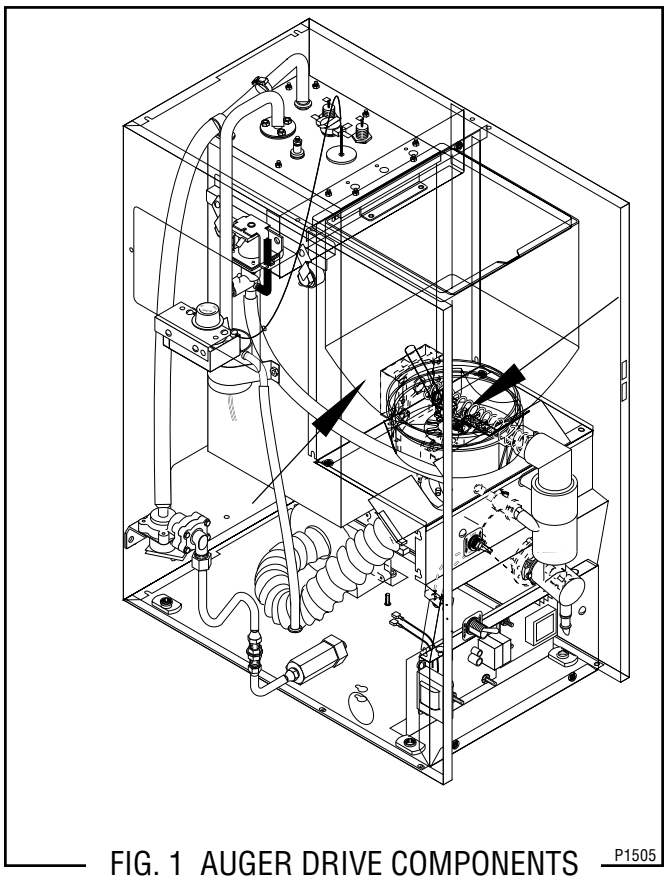

FIG. 1 AUGER DRIVE COMPONENTS

Location

The auger components are located inside the bottom part of the hopper except for the auger drive bracket, washer and locknut, which are located on the outside rear of the hopper base. The auger motor is located on the lower right rear of the motor mounting panel. Refer to Fig. 2 for disassembly and assembly.

Test Procedures - Auger motors

1. Disconnect the dispenser from the power source.
2. Disconnect the wires from the motor.
3. Check the voltage across the red wire and the gray wire with a voltmeter. Press and hold the dispense switch. Connect the dispenser to the power supply. The indication must be :
   a) 120 volts ac for two wire 120 volt models.
   b) 120 volts ac for three wire 120/208 volt or 120/240 volt models.
4. Disconnect the dispenser from the power supply.

If voltage is present as described, proceed to #5.
If voltage is not present as described, refer to the wiring diagram and check the dispenser wiring harness.

SERVICE

AUGER DRIVE COMPONENTS (CONT.)

5. With the wires removed from the motor . Check for continuity across the two terminals on the bottom of the auger motor.

If continuity is present as described, refer to Fig.3 and reconnect the wires to the terminals on the bottom of the auger motor, the auger motor is operating properly.

If continuity is not present as described, replace the auger motor.

Removal, Cleaning and Replacement

Hopper & Auger

1. Open the dispenser door and raise the top front cover.
2. Lift the hopper assy (18) over the pins (17) on hopper support plate (13) and slide hopper assembly out the front of the dispenser.
3. Remove hopper lid (1) and empty product.
4. Lift hopper (2) off of the hopper base(9).
5. Pull off the ejector elbow (16).
6. Remove retainer clip (11) and washer (10) from the bottom of the hopper base (9).
7. Remove whipper shaft (3), wiper blade (4) and wiper drive gear (5) from the hopper base (9).
8. Remove auger wire (15) by pulling it out the front of the hopper base (9).
9. Remove auger drive shaft (14) by removing the retaining clip (6) from auger drive shaft.
10. Slide spacer (8) and auger drive shaft bracket (7) off of the auger drive shaft (14).
11. Remove auger drive shaft (14) from hopper base (9).
12. Wash components in a mild solution of dish detergent using a bristle brush when needed.
13. Rinse and dry each item thoroughly.
14. Check for damaged or broken components, replace any if necessary and reassemble hopper assembly.
15. Install hopper assy (18) in the dispenser by sliding hopper assy on the hopper support plate (13) until the slot in the rear of the hopper base (9) seats against the shoulder screw (12) and pins (17) in the hopper support plate (13).

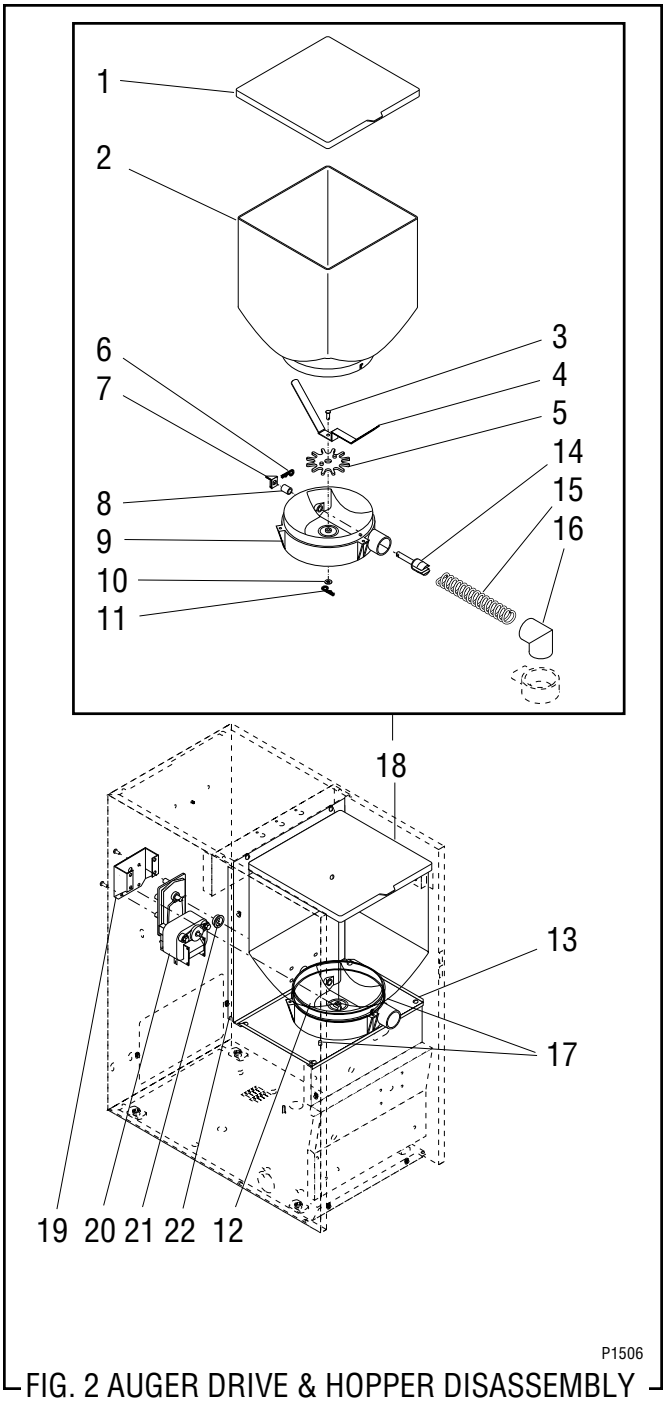

FIG. 2 AUGER DRIVE & HOPPER DISASSEMBLY

1. Hopper Lid
2. Hopper
3. Wiper Shaft
4. Wiper Blade
5. Wiper Drive Gear
6. Retainer Clip
7. Auger Drive Bracket
8. Spacer
9. Hopper Base
10. Washer
11. Retainer Clip
12. Shoulder Screw
13. Hopper Support Plate
14. Auger Drive Shaft
15. Auger Wire
16. Ejector Elbow
17. Hopper Locating Pins
18. Hopper Assembly
19. Auger Motor Bracket
20. Auger Motor
21. Dust Seal
22. Auger Motor Mounting panel

SERVICE (cont.)

AUGER DRIVE COMPONENTS (cont.)

Auger Drive Motor (Refer to Fig. 2)

1. Remove hopper assy (18), and set aside for reassembly.
2. Remove the four #8-32 screws securing the hopper support plate (13), remove plate and set aside for reassembly.
3. Remove the four #8-32 screws, located inside the dispener housing on the lower right front of the auger motor mounting panel (22), securing auger motor mounting bracket (19) and auger motor (20) to the rear of the auger motor mounting panel (22).
4. Disconnect the wires from the auger motor (20).
5. Remove auger motor mounting bracket (19), auger motor (20) and dust seal (21) as an assembly.
6. Remove dust seal (21) from auger motor (20).
7. Remove the four #8-32 screws securing the auger motor (20) to the auger motor mounting bracket (19).
8. Remove auger motor (20) and discard.
9. Using four #8-32 screws install new auger motor (20) on mounting bracket (19).
10. Install dust seal (21) on auger motor shaft and align notch in seal with motor casting.
11. Reconnect the wires to the terminals on the bottom of the auger motor.
12. Refer to Fig. 3 when reconnecting wires.
13. Using four #8-32 locking screws install auger motor, dust seal and mounting bracket to the rear of the auger motor mounting panel (22).
14. Install hopper assy (18).

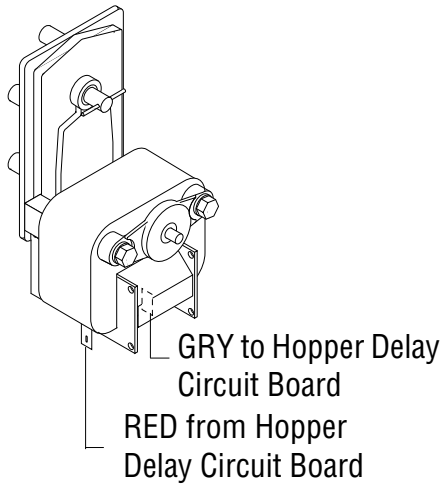

FIG. 3 AUGER MOTOR TERMINALS

BALLAST

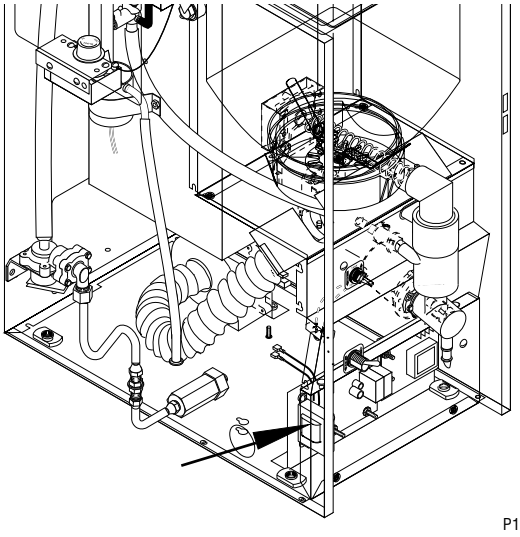

FIG. 4 BALLAST

Location

The front door lamp ballast is located behind the front access panel on the left side of the component bracket

Test Procedure

1. Disconnect the dispenser from the power source.
2. Disconnect the two terminal plug of the door interconnect harness from the main wiring harness.
3. Check the voltage across the white wire and the blue wire terminals of the ballast with a voltmeter. Connect the dispenser to power source. The indication must be:
   a) 120 volts ac for two wire 120 volt models.
   b) 120 volts ac for 120/208 volt models or 120/240 volt models.

If voltage is present as described the ballast is operating properly.
If voltage is not present as described, replace the ballast.

Removal and Replacement

1. Disconnect the wires from the ballast.
2. Remove the #8-32 keps nuts securing the ballast to the dispenser base.
3. Remove and discard ballast.
4. Install new ballast over the weld pin on the component bracket and secure with one #8-32 screw.
5. Refer to the Fig. 5 when reconnecting the wires.

SERVICE (cont.)

BALLAST (cont.)

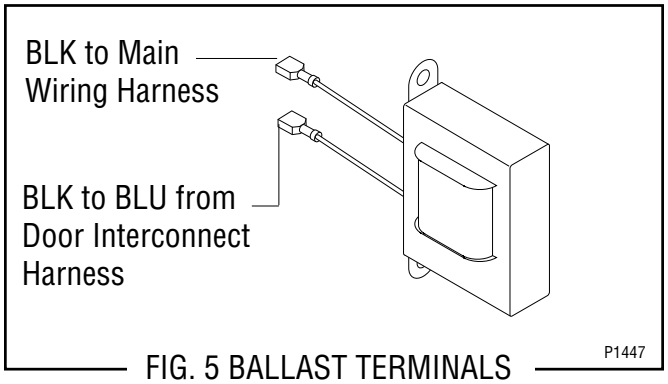

FIG. 5 BALLAST TERMINALS

CONTROL THERMOSTAT

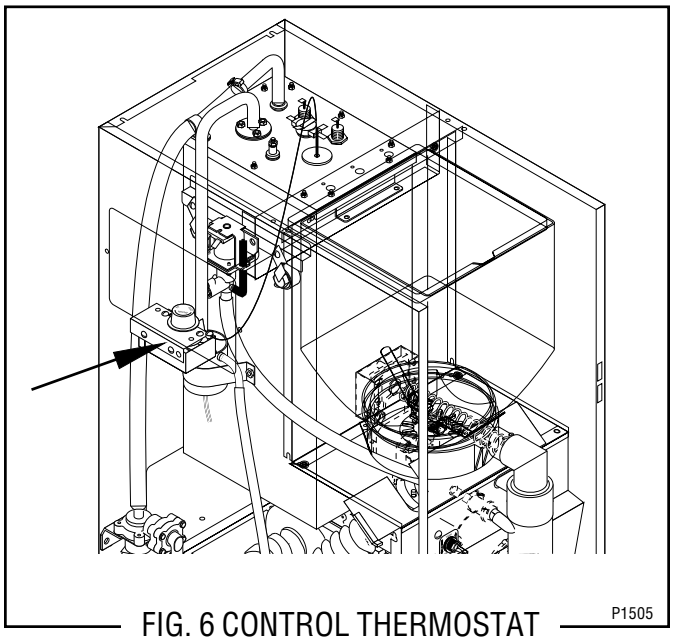

FIG. 6 CONTROL THERMOSTAT

Location

The thermostat is located inside the dispenser on the upper left rear side of the housing.

Test Procedure

1. Disconnect the dispenser from the power source.
2. Disconnect the black wire of the control thermostat from the black lead from the limit thermostat.
3. Remove bulb from the tank.
4. Check the voltage across black wire on the control thermostat and the white or red wire on the tan heater with the tank heater switch in the “ON” lower position with a voltmeter. Connect the dispenser to the power source. The indication must be:
   a) 120 volts ac for two wire 120 volt models.
   b) 120 volts ac for three wire 120/208 volt or 120/240 volt models.
5. Disconnect the dispenser from the power source.

If voltage is present as described the control thermostat is operating properly. Reinstall bulb into the tank. If voltage is not present as described, replace the thermostat.

Removal and Replacement.

1. Disconnect the wires from the thermostat.
2. Remove the thermostat capillary bulb by firmly pulling-up on the capillary at the tank lid. This will disengage the grommet from the tank lid.
3. Loosen the two #8-32 screw securing the thermostat to the upper left rear side of the dispenser housing.
4. Remove thermostat bracket and thermostat as an assembly.
5 Remove the two #6-32 screws securing the thermostat to the thermostat bracket and discard thermostat.
6. install new thermostat on the thermostat bracket using two #6-32 screws.
7. Install the thermostat and bracket inside the dispenser housing on the upper left rear side and tighten the two #8-32 screws.
8. Slide the grommet to the line 4.5" above the bulb on the new capillary tube.
9. Insert the capillary bulb through the hole in the tank lid and press the grommet firmly and evenly so that the groove in the grommet fits into the tank lid.
10. Carefully bend the capillary tube so that the tube and bulb inside the tank are in the vertical position and away from any electrical connections.
11. Refer to Fig. 7 and reconnect the wires.

NOTE - The capillary tube must be clear of any electrical termination and not kinked.

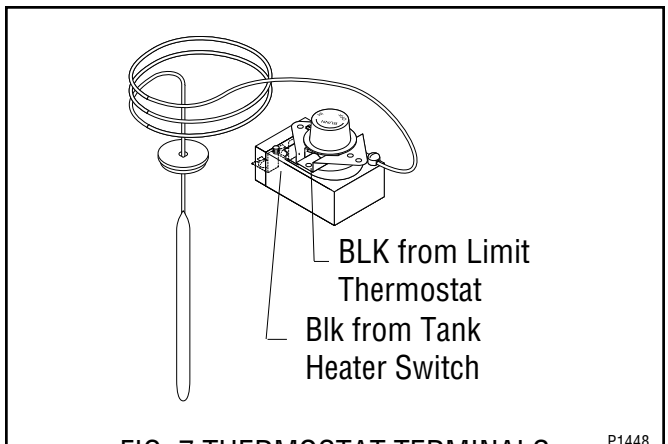

FIG. 7 THERMOSTAT TERMINALS

SERVICE (cont.)

DISPENSE SWITCH

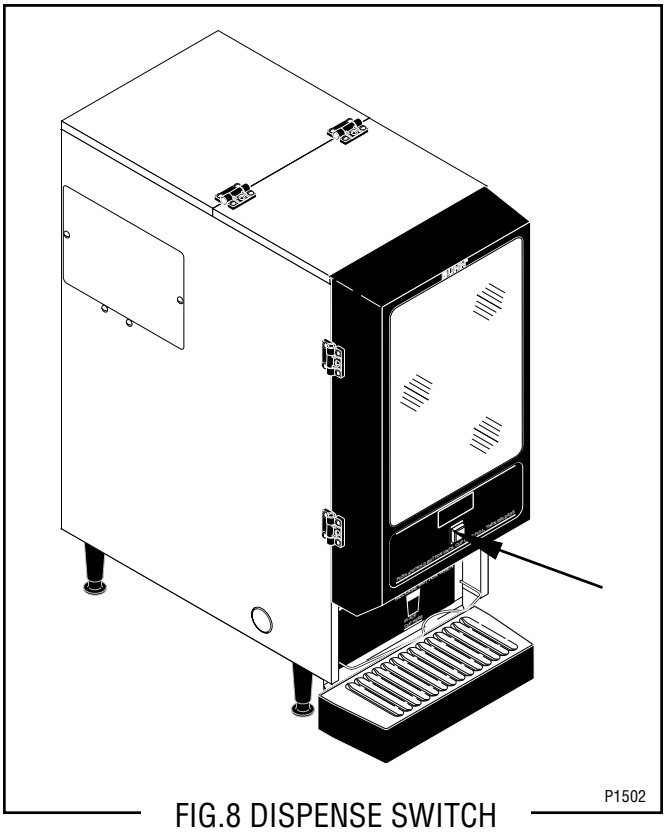

FIG.8 DISPENSE SWITCH

Location:

The dispense switch is located on the lower outside center of the dispenser door.

Test Procedure:

1. Disconnect the dispenser from the power source.
2. Open the dispenser door and remove the bottom door cover.
3. Disconnect the wires from the door interconnect wiring harness to the dispense switch.
4. Check for voltage across the black wire and the red wire from the door interconnect wiring harness. Connect the dispenser to the power supply. The indication must be:
   a) 120 volts ac for two wire 120 volt models.
   b) 120 volts ac for three wire 120/208 volt or 120/240 volt models.
5. Disconnect the dispenser from the power source.

If voltage is present as described, proceed to #6.
If voltage is not present as described, refer to the wiring diagram and check the dispenser wiring harness.

6. Check for continuity across the terminals with the switch in the“ON” pressed position. Continuity must not be present when the switch is in the “OFF” released position.

If continuity is present as described, reconnect the connector to the door interconnect wiring harness, the switch is operating properly.
If continuity is not present as described, replace the switch.

Removal and Replacement

1. Open the dispenser door.
2. Remove the five #6-32 screws securing the bottom door cover and remove cover.
3. Disconnect the wires on the dispense switch from the door interconnect wiring harness.
4. Compress the clips inside the door on the dispense switch and gently push the switch through the opening
5. Push the new switch into the opening and spread the clips to hold the switch in the door.
6. Reconnect the wires to the dispense switch from the door interconnect wiring harness.
7. Reinstall the door bottom cover using five #6-32 screws.
8. Refer to Fig. 9 when reconnecting wires.

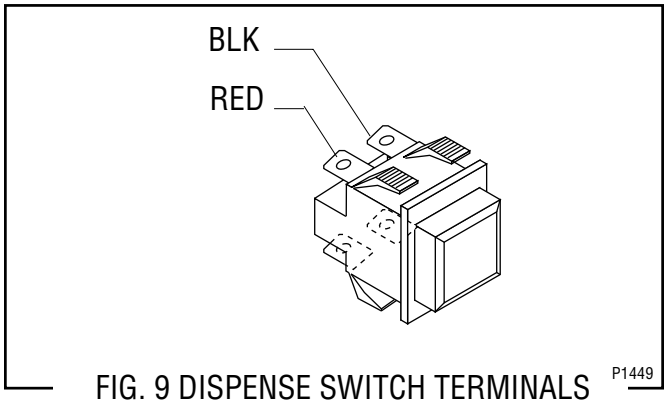

FIG. 9 DISPENSE SWITCH TERMINALS

SERVICE (cont.)

FAN

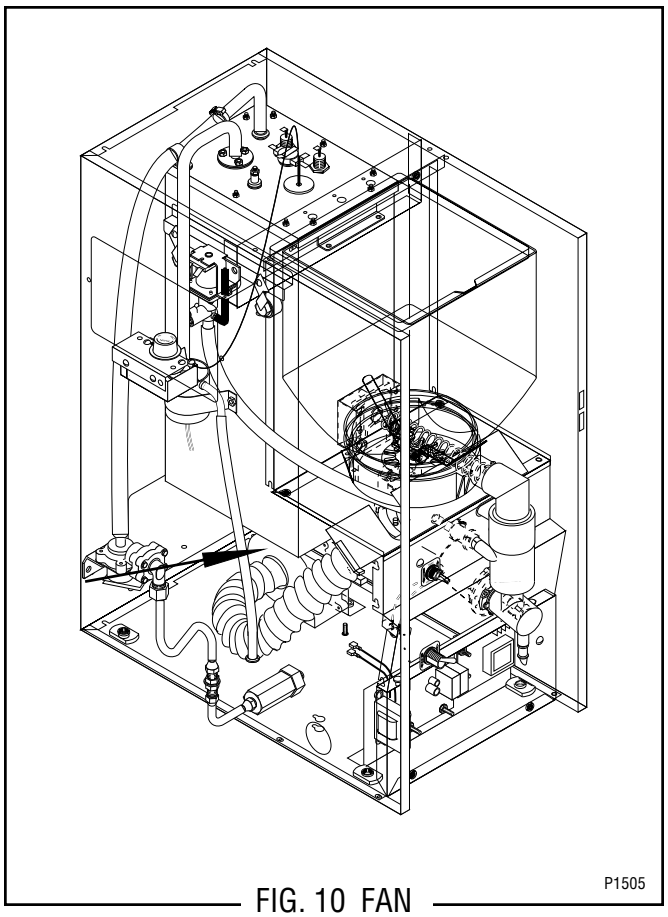

FIG. 10 FAN

Location:

The fan is located inside the dispenser housing on the right rear of the dispenser base plate.

Test Procedures:

1. Disconnect the dispenser from the power source.
2. Disconnect the black and white wires from the fan terminals.
3. Check the voltage across the black and white wires on the main harness with a voltmeter. Connect the dispenser to the power source. The indication must be:
   a) 120 volts ac for two wire 120 volts models.
   b) 120 volts ac for three wire 120/208 volt or 120/240 volt models.

If voltage is present as described, replace the fan
If voltage is not present as described, refer to wiring diagram and check the dispenser wiring harness.

Removal and Replacement:

1. Disconnect the vacuum hose from the fan.
2. Remove the two #8-32 locking screws securing the fan to the dispenser housing base plate.
3. Disconnect the wires from the fan terminals and discard the fan
4. Refer to Fig. 11 and connect the wires to the new fan.
5. Install new fan through the rear access hole and secure to the dispenser housing base plate using two #8-32 locking screws.
6. Reconnect the vacuum hose to the fan.

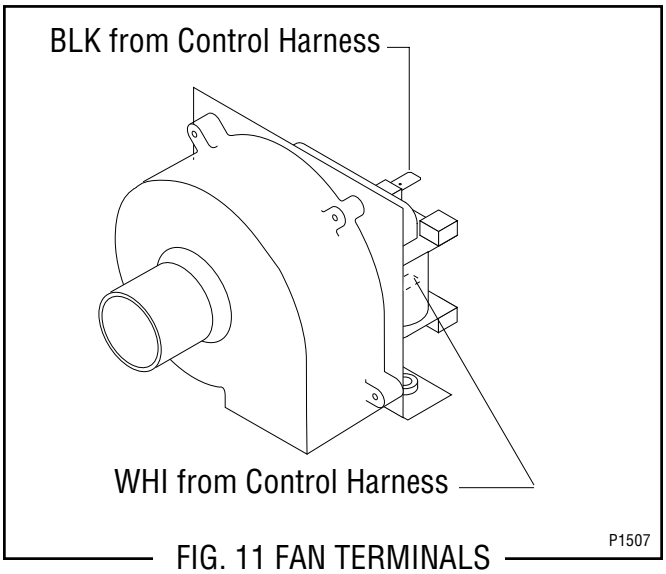

FIG. 11 FAN TERMINALS

FROTHER AND WHIPPER MOTOR

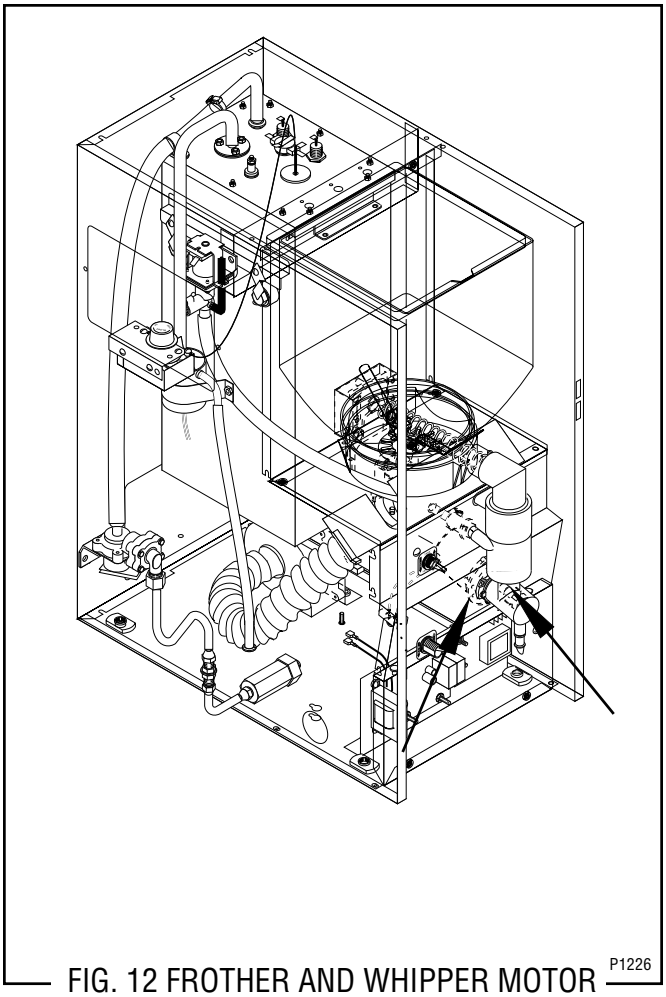

FIG. 12 FROTHER AND WHIPPER MOTOR

Location:

The frother is located behind the dispenser door, mounted on the front panel inside the whipper chamber.

The whipper motor is located on the back side of the whipper motor mounting panel

Test Procedure:

1. Disconnect the dispenser from the power source.
2. Disconnect the white/red and white wires of the main harness from the black leads of the motor.
3. Press and hold the dispense switch and check the voltage across the disconnected harness wires with a voltmeter. Connect the dispenser to the power source. The reading must be:
   a) 120 volts ac for two wire 120 volt models.
   b) 120 volts ac for three wire 120/208 volt or 120/240 volt models.
4. Disconnect the dispenser from the power source.

If voltage is present as described, replace the motor. If voltage is not present as described, refer to the wiring diagrams and check the dispenser wiring harness.

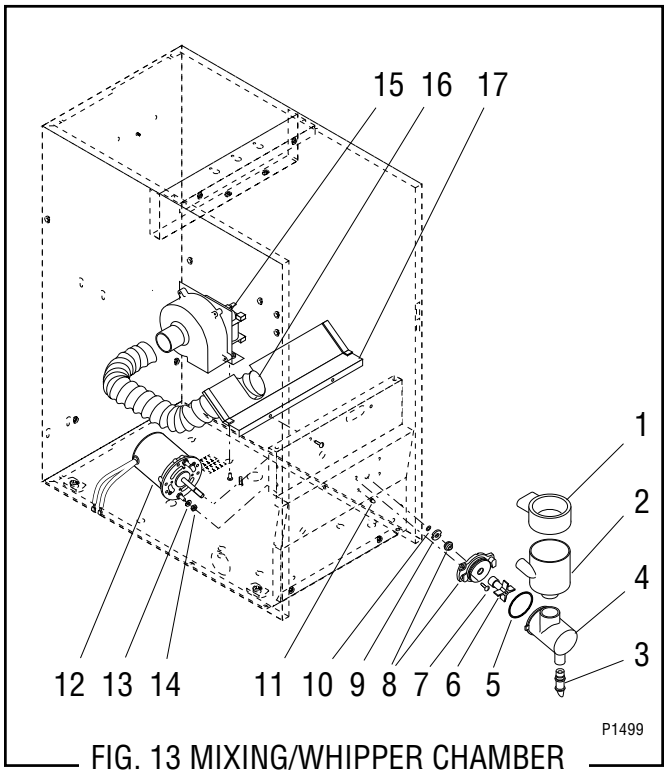

FIG. 13 MIXING/WHIPPER CHAMBER COMPONENTS

1. Steam Collector
2. Mixing Chamber
3. Dispense Tip
4. Whipper Chamber
5. O-Ring
6. Frother
7. #6-32 Screw
8. Receptical w/Seal
9. Teflon Washer
10. O-Ring
11. #8-32 Acorn Nut
12. Motor Assy.
13. Washer
14. Nut
15. Fan
16. Vacuum Hose
17. Baffle

Removal, Cleaning and Replacement (Refer to Fig. 13)

1. Open the dispenser door and raise the top front cover.
2. Lift the hopper assembly over the pin on the hopper support panel and slide hopper assembly out the front of the dispenser. Set aside for reassembly.
3. Remove the four #8-32 screws securing the hopper support panel to auger motor mounting panel and the whipper motor mounting panel. Set aside for reassembly.

SERVICE (cont.)

FROTHER AND WHIPPER MOTOR (cont.)

4. Disconnect vacuum hose (16) from fan baffle (17).

5. Remove the steam collector (1) by pulling it forward and at the same time twisting it clockwise.
6. Pull the mixing chamber (2) out of the whipper chamber (4).
7. Remove dispense tip (3) and twist the whipper chamber (4) clockwise and pull it off the whipper chamber receptacle (8).
8. Pull the frother (6) off the motor shaft. Notice the flat side on the shaft and the matching flat inside the frother. It is important that these two flats are lined up when reassembling.
9. Slip the O-ring (5) off the whipper chamber receptical (8).
10. Remove the two #6-32 screws (7) securing whipper chamber receptical (8) to the front panel.
11. Slide the receptical w/seal off of the motor shaft.
12. Slide teflon washer (9) and O-ring (10) off of the motor shaft.
13. Remove the two #4-40 x .25" screws securing the fan baffle(17) to the whipper motor mouting panel and remove fan baffle. Set aside for reassembly.
14. Disconnect the black leads on the whipper motor (12) from the main wiring harness.
15. Remove the two #8-32 acorn nuts (11) securing the motor (12) to the rear of front panel.
16. Remove motor and discard.
17. Install new motor (12) on rear of front panel and secure with two #8-32 acorn nuts (11) and connect black leads on the motor to the main wiring harness. Refer to Fig. 14 when reconnecting wires
18. Slide O-ring (10) onto the motor shaft to approximately 1/16" of the front panel.
19. Wash remaining components in a mild solution of dish detergent using a bristle brush.
20. Rinse thoroughly and allow to dry before reinstalling in the dispenser.
21. Place teflon washer into back opening of whipper chamber receptical and align one notch with bump in the opening.
22. Slide whipper chamber receptacle w/seal on to the motor shaft and secure to the front panel using two #6-32 screws (7).
23. Slip O-ring (5) onto the whipper chamber receptical (8).
24. Push frother (6) onto the motor shaft, making sure the flat in the frother (6) lines up with the flat on the motor shaft.
25. Install whipper chamber (4) on the whipper chamber receptical (8) by twisting counterclockwise until the tabs on the whipper chamber (4) lock with the tabs on the whipper chamber receptical (8). Be sure dispense port is pointing down.
26. Install dispense tip (3) into the bottom of the whipper chamber (4). Be sure the cutout part of the dispense tip is facing the outside of the dispenser.
27. Using two #4-40 screws secure the fan baffle to the whipper motor mounting panel.
28. Install vacuum hose (16) on fan baffle (17).
29. Install hopper support panel using four #8-32 screws.
30. Slip the mixing chamber (2) onto the mixing chamber water inlet tube far enough so the mixing chamber (2) will seat inside the whipper chamber (4).
31. Install the steam collector (1) onto the mixing chamber (2) by pushing down and toward the dispenser while twisting until the flange on the steam collector lines-up with the slot in the front panel.
32. Install hopper assembly in the dispenser by sliding hopper assembly on the hopper support panel until the slot in the bottom rear of the hopper seats against the shoulder screw in the hopper support panel and pins in the hopper support panel.

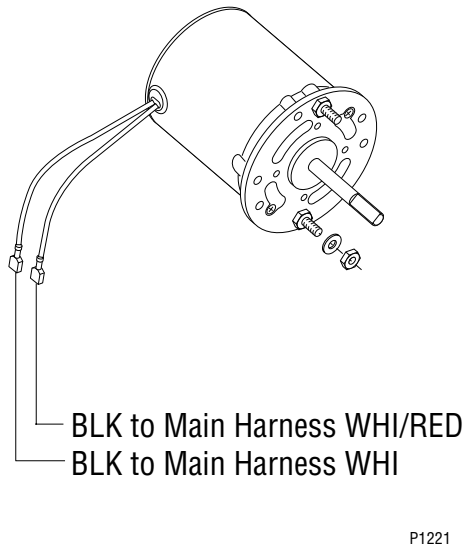

FIG.14 WHIPPER MOTOR TERMINALS

SERVICE (cont.)

HOPPER DELAY BOARD

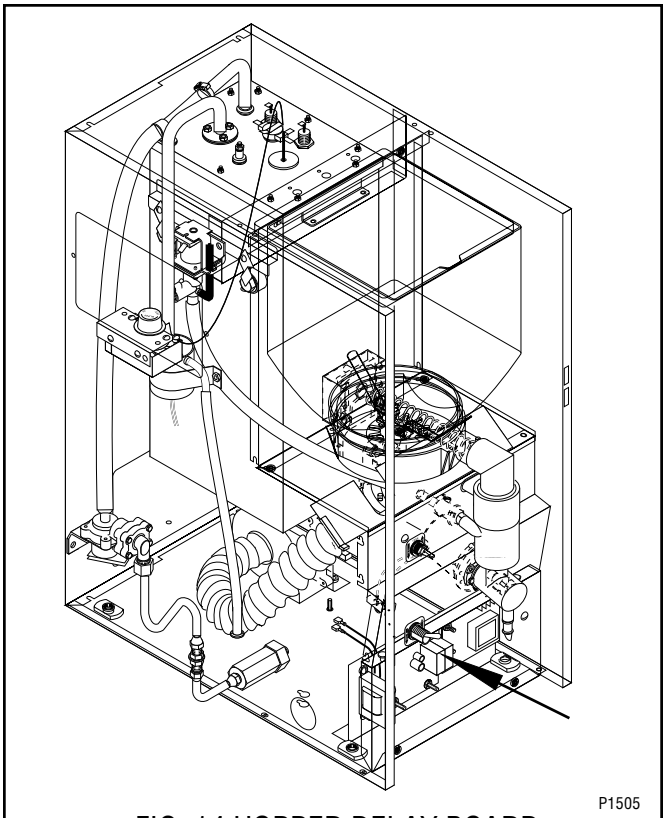

FIG. 14 HOPPER DELAY BOARD

Location

The hopper delay board is located behind the lower front access panel mounted in the center of the component bracket.

Test Procedures:

1. Disconnect the dispenser from the power source.
2. Disconnect the eight pin plug on the main wiring harness from the eight pin connector on the hopper delay board.
3. With the rinse/run switch in the “Run”, lower position, check the voltage across the white wire (#8 terminal) and black wire (#4 terminal) of the main wiring harness with a voltmeter. Connect the dispenser to the power source. The indication must be:
   a) 120 volts ac for two wire 120 volt models.
   b) 120 volts ac for three wire 120/208 volt or 120/240 volt models.
4. Disconnect the dispenser from the power source.

If voltage is present as described, proceed to #5.
If voltage is not present as described, refer to the wiring diagram and check the dispenser wiring harness.

5. Reconnect the eight pin connector of the main wiring harness to the hopper delay board.
6. Check the voltage across the terminals on the auger motor with a voltmeter. Press and hold the dispense switch. Connect the dispenser to the power source. After a delay of .7 seconds the indication must be:
   a) 120 volts ac for two wire 120 volt models.
   b) 120 volts ac for three wire 120/208 volt or 120/240 volt models.
7. Disconnect the dispenser from the power source.

If voltage is present as described the hopper delay board is operating properly.
If voltage is not present as described, replace the hopper delay board.

Removal and Replacement:

1. Disconnect the eight pin plug from the hopper delay board.
2. Remove the two #8-32 keps nuts securing the hopper delay board to the component bracket.
3. Remove hopper delay board and discard.
4. Install new hopper delay board on the component bracket using two #8-32 keps nuts.
5. Reconnect the eight pin connector to the hopper delay board.