BUNN®

DUAL®/GPR-DBC®

WITH SMART FUNNEL®

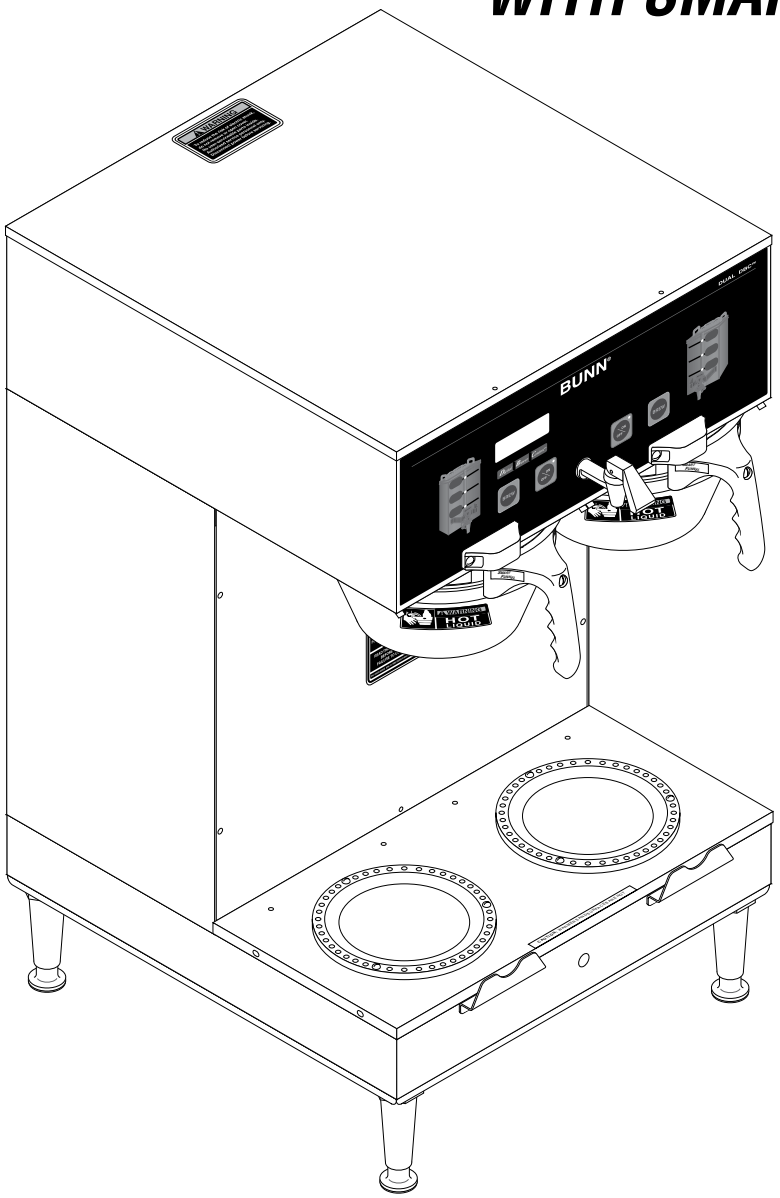

ILLUSTRATED PARTS CATALOG

Designs, materials, weights, specifications, and dimensions for equipment or replacement parts are subject to change without notice.

BUNN-O-MATIC CORPORATION

POST OFFICE BOX 3227
SPRINGFIELD, ILLINOIS 62708-3227
PHONE: (217) 529-6601 FAX: (217) 529-6644

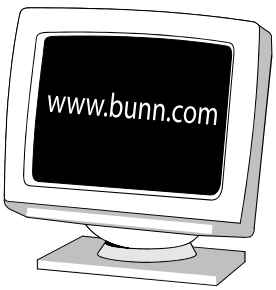

37613.0000 09/11 ©2004 Bunn-O-Matic Corporation

BUNN-O-MATIC COMMERCIAL PRODUCT WARRANTY

Bunn-O-Matic Corp. ("BUNN") warrants equipment manufactured by it as follows:
1) All equipment other than as specified below: 2 years parts and 1 year labor.
2) Electronic circuit and/or control boards: parts and labor for 3 years.
3) Compressors on refrigeration equipment: 5 years parts and 1 year labor.
4) Grinding burrs on coffee grinding equipment to grind coffee to meet original factory screen sieve analysis: parts and labor for 3 years or 30,000 pounds of coffee, whichever comes first.

These warranty periods run from the date of installation BUNN warrants that the equipment manufactured by it will be commercially free of defects in material and workmanship existing at the time of manufacture and appearing within the applicable warranty period. This warranty does not apply to any equipment, component or part that was not manufactured by BUNN or that, in BUNN's judgment, has been affected by misuse, neglect, alteration, improper installation or operation, improper maintenance or repair, damage or casualty. This warranty is conditioned on the Buyer 1) giving BUNN prompt notice of any claim to be made under this warranty by telephone at (217) 529-6601 or by writing to Post Office Box 3227, Springfield, Illinois 62708-3227; 2) if requested by BUNN, shipping the defective equipment prepaid to an authorized BUNN service location; and 3) receiving prior authorization from BUNN that the defective equipment is under warranty.

THE FOREGOING WARRANTY IS EXCLUSIVE AND IS IN LIEU OF ANY OTHER WARRANTY, WRITTEN OR ORAL, EXPRESS OR IMPLIED, INCLUDING, BUT NOT LIMITED TO, ANY IMPLIED WARRANTY OF EITHER MERCHANTABILITY OR FITNESS FOR A PARTICULAR PURPOSE. The agents, dealers or employees of BUNN are not authorized to make modifications to this warranty or to make additional warranties that are binding on BUNN. Accordingly, statements by such individuals, whether oral or written, do not constitute warranties and should not be relied upon.

If BUNN determines in its sole discretion that the equipment does not conform to the warranty, BUNN, at its exclusive option while the equipment is under warranty, shall either 1) provide at no charge replacement parts and/or labor (during the applicable parts and labor warranty periods specified above) to repair the defective components, provided that this repair is done by a BUNN Authorized Service Representative; or 2) shall replace the equipment or refund the purchase price for the equipment.

THE BUYER'S REMEDY AGAINST BUNN FOR THE BREACH OF ANY OBLIGATION ARISING OUT OF THE SALE OF THIS EQUIPMENT, WHETHER DERIVED FROM WARRANTY OR OTHERWISE, SHALL BE LIMITED, AT BUNN'S SOLE OPTION AS SPECIFIED HEREIN, TO REPAIR, REPLACEMENT OR REFUND.

In no event shall BUNN be liable for any other damage or loss, including, but not limited to, lost profits, lost sales, loss of use of equipment, claims of Buyer's customers, cost of capital, cost of down time, cost of substitute equipment, facilities or services, or any other special, incidental or consequential damages.

392, AutoPOD, AXIOM, BrewLOGIC, BrewMETER, Brew Better Not Bitter, BrewWISE, BrewWIZARD, BUNN Espress, BUNN Family Gourmet, BUNN Gourmet, BUNN Pour-O-Matic, BUNN, BUNN with the stylized red line, BUNNlink, Bunn-OMatic, Bunn-O-Matic, BUNNserve, BUNNSERVE with the stylized wrench design, Cool Froth, DBC, Dr. Brew stylized Dr. design, Dual, Easy Pour, EasyClear, EasyGard, FlavorGard, Gourmet Ice, Gourmet Juice, High Intensity, iMIX, Infusion Series, Intellisteam, My Cafe, My Café, PowerLogic, Quality Beverage Equipment Worldwide, Respect Earth, Respect Earth with the stylized leaf and coffee cherry design, Safety-Fresh, savemycoffee.com, Scale-Pro, Silver Series, Single, Smart Funnel, Smart Hopper, SmartWAVE, Soft Heat, SplashGard, The Mark of Quality in Beverage Equipment Worldwide, ThermoFresh, Titan, trifecta, Velocity Brew, A Partner You Can Count On, Air Brew, Air Infusion, Beverage Bar Creator, Beverage Profit Calculator, Brew better, not bitter., BUNNSource, Coffee At Its Best, Cyclonic Heating System, Digital Brewer Control, Nothing Brews Like a BUNN, Pouring Profits, Signature Series, Tea At Its Best, Phase Brew, The Horizontal Red Line, Ultra are either trademarks or registered trademarks of Bunn-O-Matic Corporation.

TABLE OF CONTENTS

Base - Trunk - Hood - Covers & Panels 4
Dispense Valve and Sprayhead 18
Electrical Controls 22
Faucet 20
Funnel 28
Inlet Valve & Lines 14
Numerical Index 30
Strainer, Solenoid & Lines 12
Tank and Mounting Brackets 10
Tank Heater & Overflow Protection Devices 8
Warmer Assemblies 26
Water By-Pass 16

BASE - TRUNK - HOOD - COVERS & PANELS

DUAL/GPR DBC

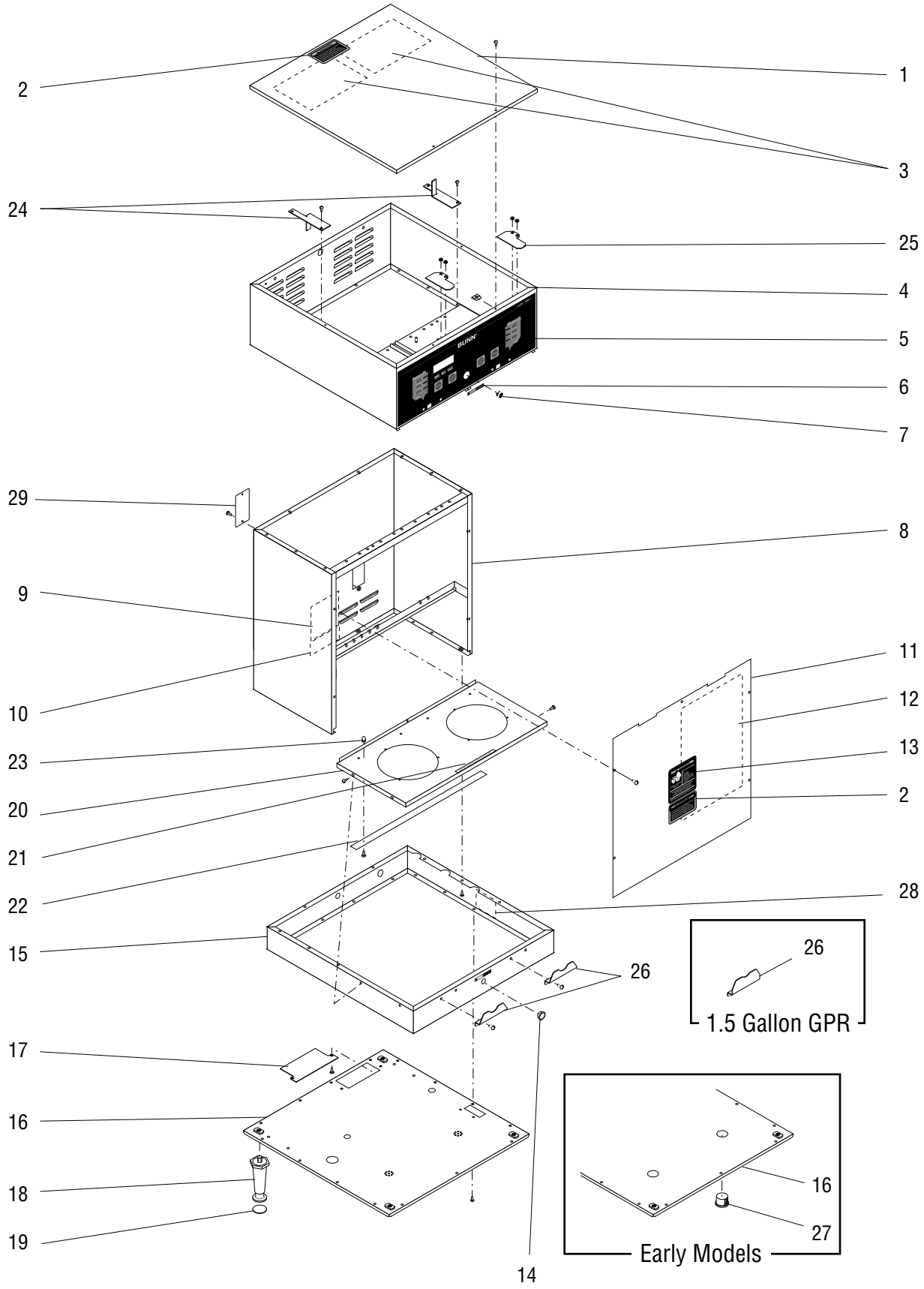

BASE - TRUNK - HOOD - COVERS & PANELS

ITEM	PART NO.	QTY.	DESCRIPTION	
1	25376.0000	1	Cover Assy, Top SST (Includes item 2 & 3)	
	25376.0002	1	Cover Assy, Top BLK (Includes item 2 & 3)	
	02336.0000	4	Screw, Truss Head SST #4 - 40 x .38”	
	02336.0002	4	Screw, Truss Head BLK #4 - 40 x .38”	
	00916.0000	4	Clip, J-Type #4-40	
2	37881.0000	2	Decal, Warning - “No Serviceable Parts”	
3	25151.0000	2	Shield, Insulator	
4	35388.1003	1	Hood W/Decals SST (Includes items 5 & 6)	
	02308.0000	16	Screw, Pn-Hd #8 - 32 x .375"	
5	29974.0004	1	Switch, Membrane	
6	20201.5600	1	Decal, Caution Hot Water	
7	05749.0004	1	Plug, Hole .50" Dia. (Brewers with lower Faucet)	
8	37132.1000	1	Trunk W/Decals SST (Brewers with Product #35900.0000)	Includes items 9 & 10
	37132.1001	1	Trunk W/Decals SST (Brewers with Product #35900.0010)	
9	00986.0000	1	Decal, Warning - Electrical	
10	00656.0001	1	Decal, Comply to Plumbing Code	
11	37135.1000	1	Panel W/Decals, Trunk SST (Brewers with Product #35900.0000)	Includes items 2, 12 & 13
	20884.1000	1	Panel W/Decals, Trunk SST (Brewers with Product #35900.0010)	
	01382.0003	5	Screw, Truss Head SST #6 - 32 x .375"	
12	29876.0004	1	Schematic	
13	00658.0000	1	Decal, Caution - Decanter/Funnel	
14	05749.0004	1	Plug, Hole .50" Dia (Brewers with upper Faucet)	
15	20924.0000	1	Base Housing	
	20924.0000	1	Base Housing (Brewers with Product #35900.0010)	
	02308.0000	8	Screw, Pan Head #8 - 32 x .375"	
16	20916.0002	1	Cover, Bottom (Early Models without Main Power Switch)	
	20916.0008	1	Cover, Bottom (Brewers with Product #35900.0000)	Models with Main Power Switch
	20916.0009	1	Cover, Bottom (Brewers with Product #35900.0010)	
	20916.0012	1	Cover, Bottom (Brewers with internal mounted Heat Sinks)	
	02308.0000	15	Screw, Pan Head #8 - 32 x .375"	
17	37766.0000	1	Panel, Access Cover	
	02308.0000	2	Screw, Pan Head #8 - 32 x .375"	
18	26528.0000	4	Leg, 4.0” Plastic (See Item 30)	
	00506.0000	4	Leg, 8.0” SST	
19	03996.0000	4	Pad, Anti Skid	
20	24455.0000	1	Warmer Panel Assy W/Decals (Includes Items 21, 22 & 23)	
	01382.0003	4	Screw, Truss Head SST #6 - 32 x .375"	
21	12364.0000	1	Decal, Caution-Warmers Are Hot	
22	21106.0000	1	Angle, Support (Early Brewers)	
	01311.0000	4	Screw, Truss Head SST 6-32 x .375"	

(continued)

* Indicates the part number listed is for reference only. See DESCRIPTION for possible service replacement.

BASE - TRUNK - HOOD - COVERS & PANELS

DUAL/GPR DBC

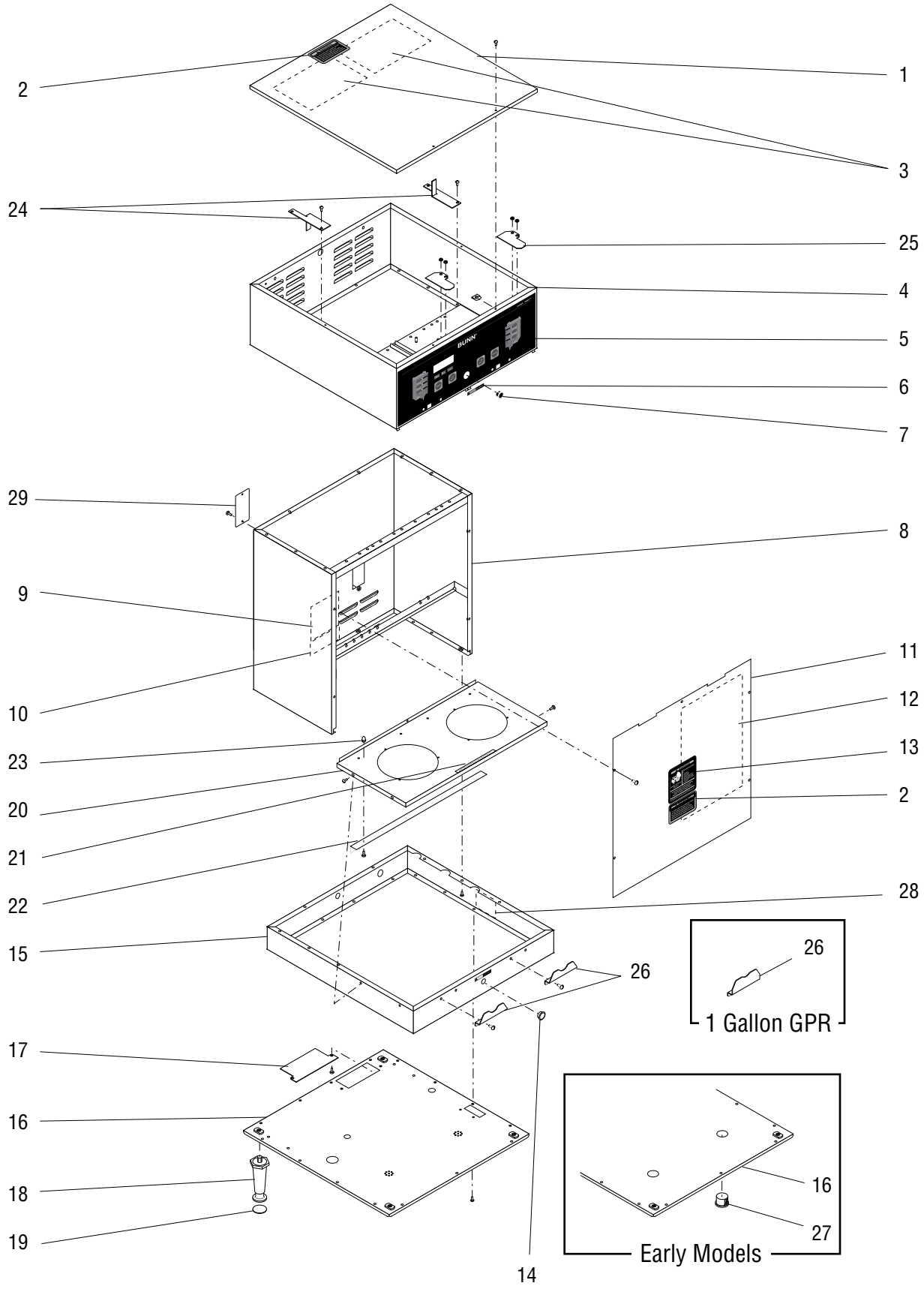

BASE - TRUNK - HOOD - COVERS & PANELS

ITEM	PART NO.	QTY.	DESCRIPTION
23	02324.0000	4	Nut, Acorn 8-32
24	26949.0000	2	Bracket, Tank Supporting
25	32649.0000	2	Plate (Brewers without Funnel Locks)
	00970.0000	4	Nut, Keps #8-32
26	21104.0003	2	Server Stop, Bolt-On (1.75 Gallon GPR)
	21104.0006	2	Server Stop, Bolt-On (1.5 Gallon GPR)
	01347.0000	4	Screw, Truss Head SST #6-32 x .38"
27	03011.0000	2	Plug, Vent BLK 1.0" Dis. (Early models)
28	39803.0000	1	Decal, Main Switch (Models with Main Power Switch only)
29	35291.0000	2	Cover, Rear
	01382.0003	4	Screw, Truss Head #6-32 x .38”
30	13255.0003	-	Leg Kit, Plastic (Includes 4 each of items 18 & 19) (Not Illustrated)

* Indicates the part number listed is for reference only. See DESCRIPTION for possible service replacement.

TANK HEATER & OVERFLOW PROTECTION DEVICES

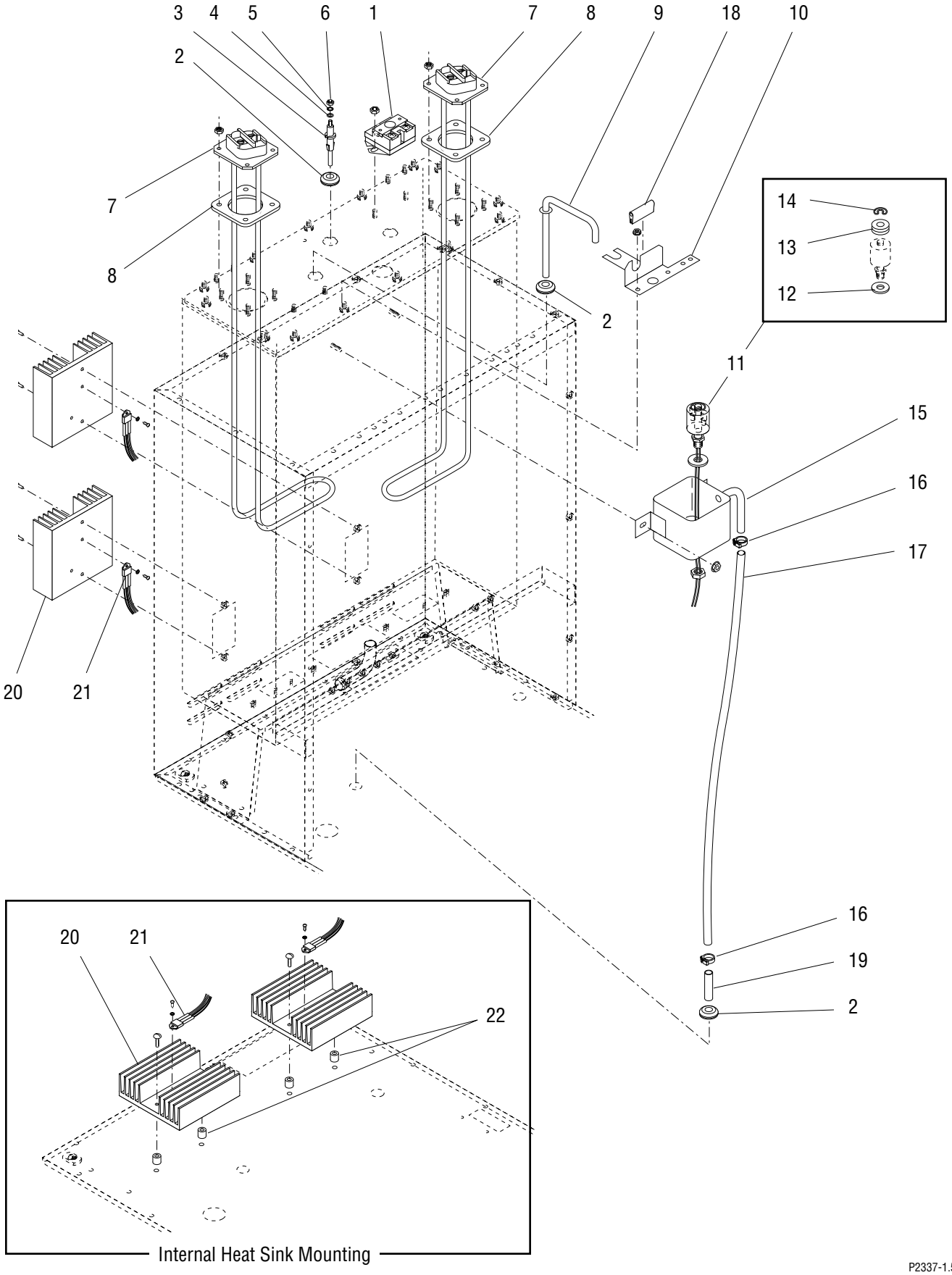

Internal Heat Sink Mounting

P2337-1.50

TANK HEATER & OVERFLOW PROTECTION DEVICES

ITEM	PART NO.	QTY.	DESCRIPTION
1	23717.0003	2	Thermostat, Limit
	00908.0000	4	Nut, Hex #8 - 32
2	02536.0000	3	Grommet .375" I.D.
3	20936.1000	1	Probe Kit (Includes items 4, 5 & 6)
4	01501.0000	1	Washer .164" I.D. x .375" O.D.
5	20203.0100	1	Lockwasher, Internal Tooth #8
6	00908.0000	1	Nut, Hex #8 - 32
7	20922.1000	2	Tank Heater, 3300W @ 240V (Includes item 8)
	00908.0000	8	Nut, Hex #8 - 32
8	12398.0002	2	Gasket, Tank Heater
9	26622.0001	1	Tube Assy, Vent
10	27473.0000	1	Bracket, Overflow Cup Mounting
11	03803.0000	1	Switch Assy, Liquid Level (Includes items 12, 13 & 14)
	04797.0000	1	Washer, Celcon .520” I.D. x 1.0” O.D.
	00946.0000	1	Nut, Hex .125” FPT
12	03633.0000	2	Gasket, Float Switch (Only 1 used in this application)
13	- - - - - - - -	3	Washer, Adjusting (**DO NOT USE IN THIS APPLICATION**)
14	03807.0000	1	Clip, Spring
15	22728.0000	1	Overflow Cup Assy (Copper) (Also replaces aluminum cup)
	00971.0000	2	Nut, Keps #10 - 32
16	12422.0001	2	Clamp, Hose .59"/.66" I.D.
17	03236.0024*	1	Tube, Silicone .313" I.D. x 25.0" (Order item 25)
18	02434.0010*	1	U-Channel 2.0" (Order item 24)
19	21801.0002	1	Tube .375" O.D.
20	20541.0001	2	Heat Sink — Also order item 23
	01388.0000	4	Screw, Truss Head #6-32 x .75"
21	12565.0011	2	Triac Assy, 40 amp, 120V
	02328.0003	2	Screw, Pan Head #6-32 x .312"
	01520.0000	2	Lockwasher #6
22	43386.0000	4	Spacer, .14” I.D. x .375” O.D. x .312” (Brewers with internal Heat Sinks)
23	M2522.1000	-	Heat Sink Compound — Not illustrated
24	02434.1000	-	U-Channel 18.0" (Use as required)
25	03236.1000	-	Tube, Silicone .313" I.D. x 12.0"
	03236.1001	-	Tube, Silicone .313" I.D. x 36.0"
	03236.1002	-	Tube, Silicone .313" I.D. x 120.0"
	03236.1003	-	Tube, Silicone .313" I.D. x 60.0"
26	03851.0000	2	Wire Nut

* Indicates the part number listed is for reference only. See DESCRIPTION for possible service replacement.

TANK AND MOUNTING BRACKETS

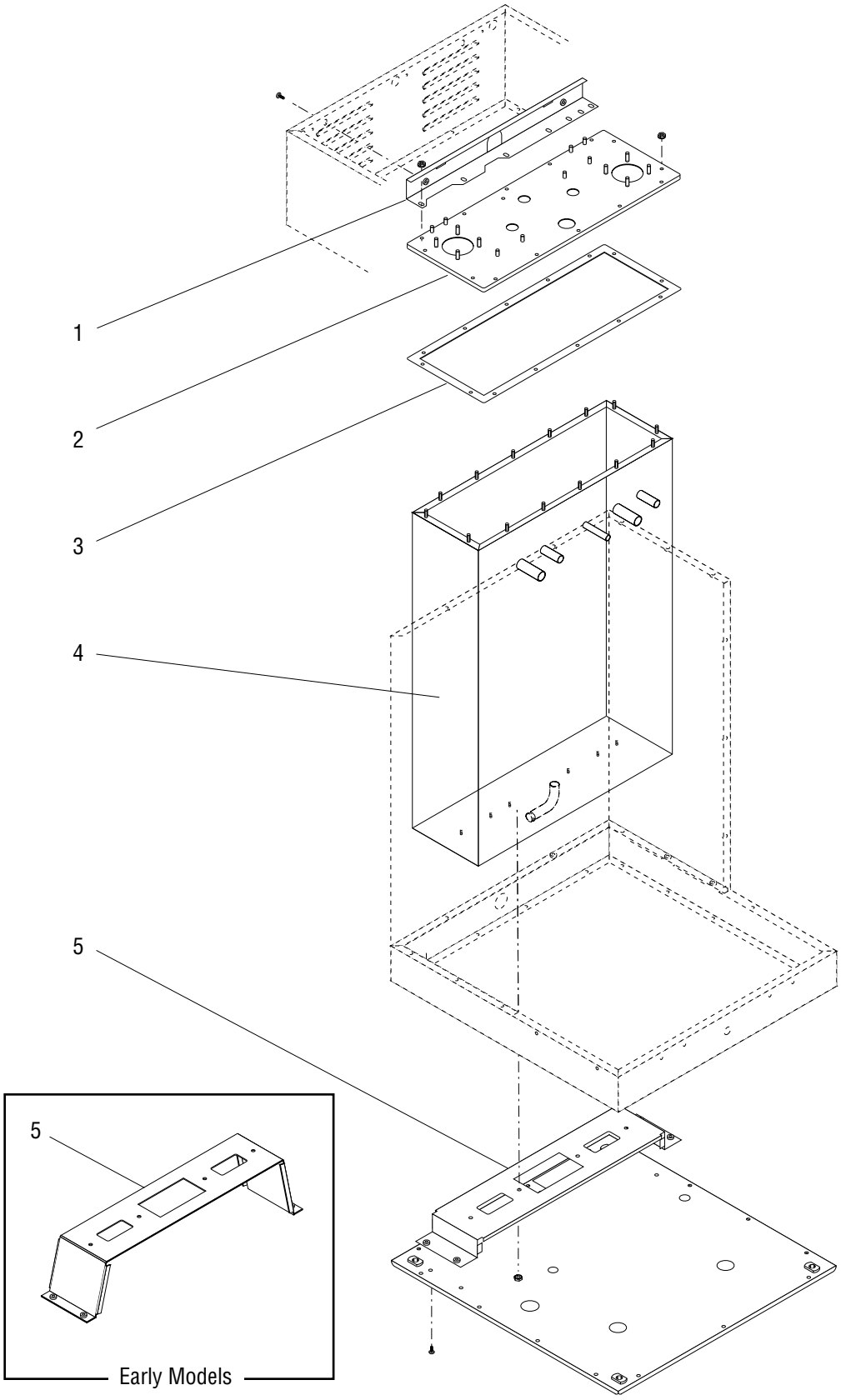

P3075.35

TANK AND MOUNTING BRACKETS

ITEM	PART NO.	QTY.	DESCRIPTION
1	26826.0000*	1	Bracket, Tank Support (Top) (Early models. Not available order Late Model Bracket)
	37526.0000	1	Bracket, Tank Support (Top) (Late models)
	02308.0000	2	Screw, Pan Head #8 - 32 x .375"
	00908.0000	4	Nut, Hex #8 - 32
2	20881.0000	1	Lid, Tank
	00908.0000	14	Nut, Hex #8 - 32
3	20883.0000	1	Gasket, Tank
4	20878.1008	1	Tank
5	37129.0000	1	Bracket, Tank Mounting (Bottom) (Early models)
	38392.0000	1	Bracket, Tank Mounting (Bottom) (Late models)
	02308.0000	4	Screw, Pan Head #8 - 32 x .375"

* Indicates the part number listed is for reference only. See DESCRIPTION for possible service replacement.

STRAINER, SOLENOID & LINES

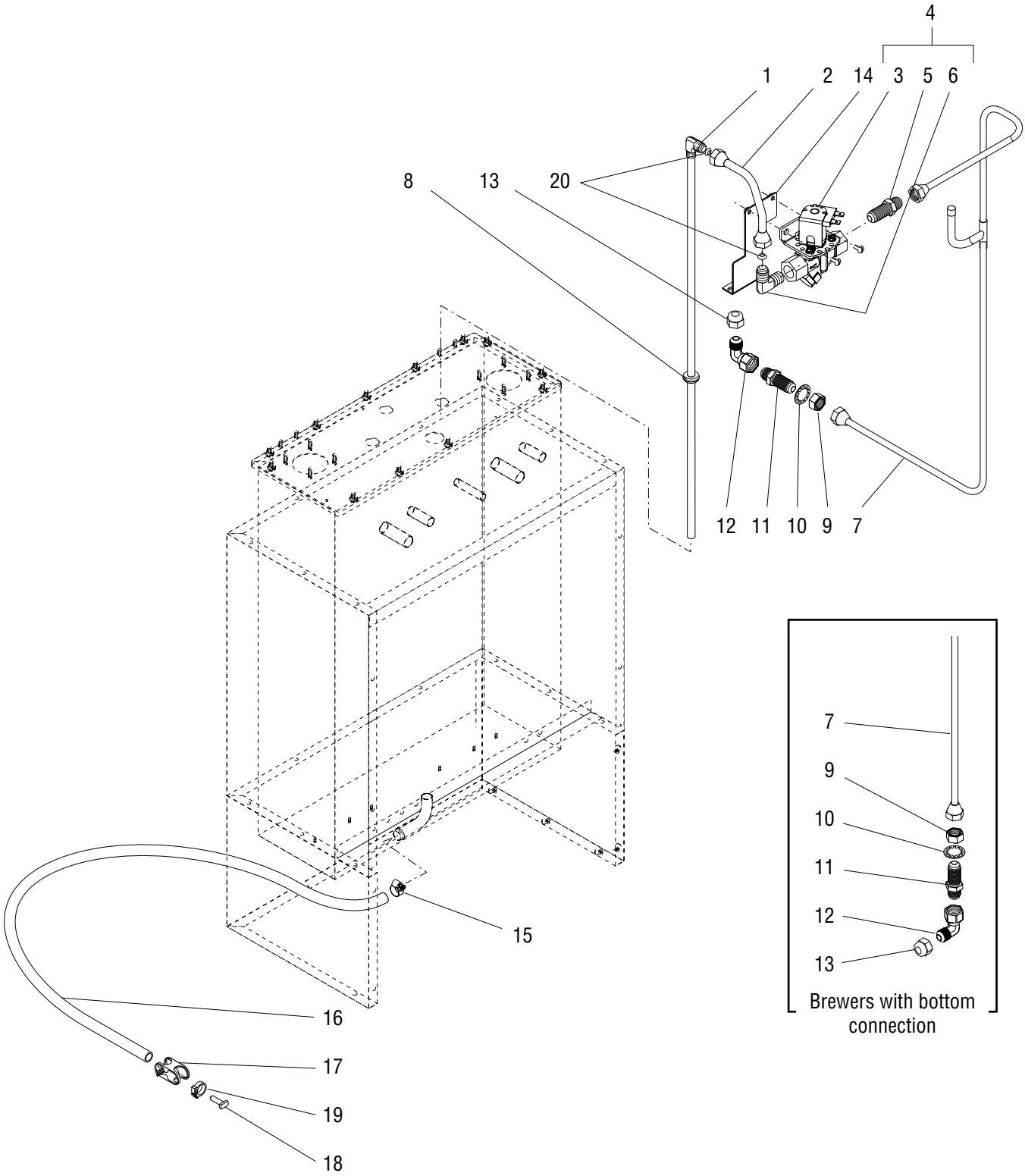

P3076.45

STRAINER, SOLENOID & LINES

ITEM	PART NO.	QTY.	DESCRIPTION
1	20937.0004	1	Tube, Tank Fill
2	36089.0001	1	Tube, Assembly, Solenoid to Tank
3	35094.0001	1	Solenoid Valve 120V
4	36088.0000	1	Solenoid Valve Assy, 120V (Includes items 3, 5 & 6)
	01315.0000	2	Screw, Truss Head #8 - 32 x .375"
5	36085.0000	1	Connector, .375" Male Flare x .375" NPT
6	34768.0001	1	Elbow, .38" Male Flare x .37"
7	37762.0000	1	Tube Assy, Fill Tube .38” O.D. Rear Inlet
	37762.0001	1	Tube Assy, Fill Tube .38” O.D. Bottom Inlet
8	02536.0000	1	Grommet, .375" I.D.
9	12757.0000	1	Nut, Hex .625-18
10	01514.0000	1	Lockwasher, Internal Tooth .625" I.D.
11	12756.0000	1	Bulkhead Fitting .38" Flare
12	37761.0000	1	90° Swivel Elbow
13	00976.0000	1	Cap Nut, .375" Flare-45
14	37127.0001	1	Bracket, Solenoid Mounting
	02308.0000	2	Screw, Pan Head #8-32 x .375”
	01522.0000	2	Washer, Flat .203” ID x .50” OD
15	29421.0000	1	Clamp, Hose-Worm Drive .625”/.75”
16	32591.1002	1	Tube, Silicone .50" I.D. x 36" LG
17	11630.0001	1	Clamp, Tubing Shut Off .75" O.D.
18	35086.0000	1	Plug, .50" I.D. Hose
19	12422.0009	1	Clamp, Hose .71”/.80” I.D.
20	32359.0000	2	Gasket, .375” Flare Copper

* Indicates the part number listed is for reference only. See DESCRIPTION for possible service replacement.

INLET VALVE AND LINE

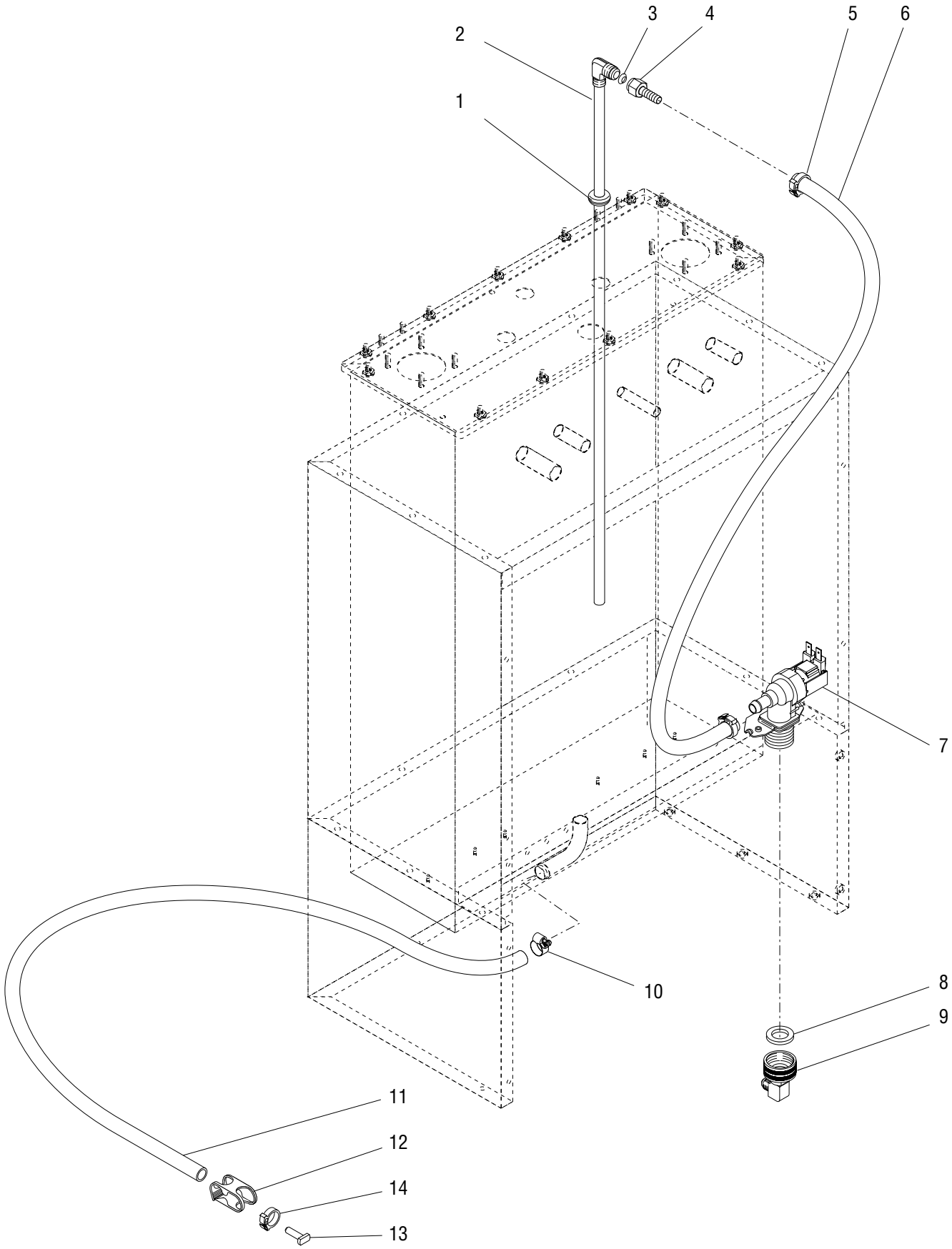

INLET VALVE AND LINE

ITEM	PART NO.	QTY.	DESCRIPTION
1	02536.0000	1	Grommet .375” I.D.
2	20937.0004	1	Tube, Tank Fill
3	32359.0000	1	Gasket, .375” Flare Copper
4	12418.0001	1	Fitting, Swivel .375” Barb
5	12422.0001	2	Clamp, Hose .59”/.66” I.D
6	20976.0000*	1	Tube, Silicone .375” I.D. x .625” O.D. x 30.0” (Order item 15)
7	36233.0000	1	Valve, Water Inlet 120V
	32283.0000	2	Screw, Pan Head M4 x 6MM
8	41640.0000	1	Gasket, .75” Hose Fitting
9	37297.0001	1	Elbow, .375” FLR x .75” FTHR
	37297.0004	1	Elbow, .375” Compression x .75” FTHR
10	29421.0000	1	Clamp, Hose-Worm Drive .625”/.75”
11	32591.1002	1	Tube, Silicone .50” I.D. x 36” LG
12	11630.0001	1	Clamp, Tubing Shut Off .75” O.D.
13	35086.0000	1	Plug, .50” I.D. Hose
14	12422.0009	1	Clamp, Hose .71”/.80”
15	20976.1000	-	Tube .375” ID x .625” OD x 12.0” (Use as required)
	20976.1001	-	Tube .375” ID x .625” OD x 36.0” (Use as required)
	20976.1002	-	Tube .375” ID x .625” OD x 120.0” (Use as required)

* Indicates the part number listed is for reference only. See DESCRIPTION for possible service replacement.

WATER BY-PASS

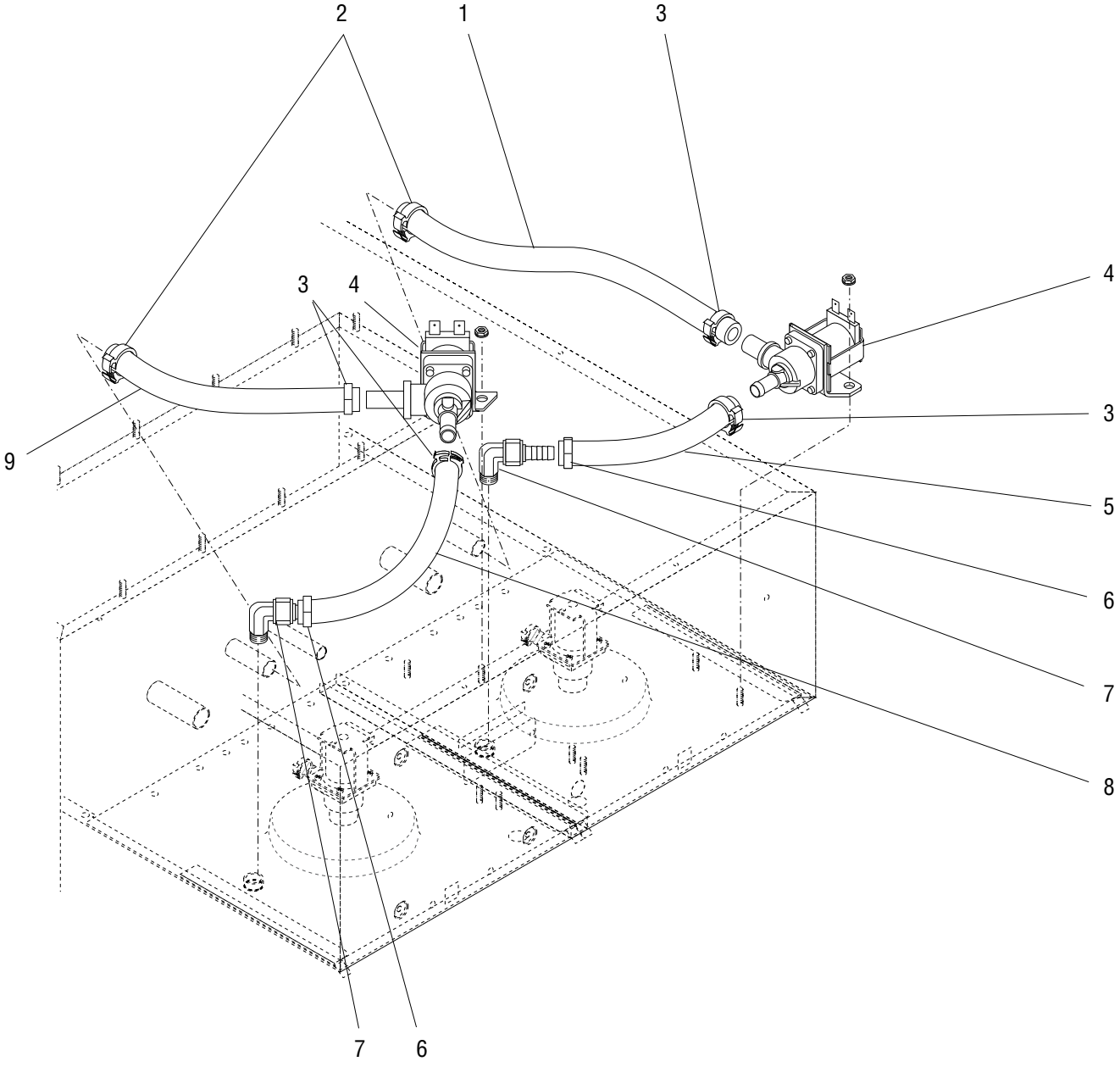

P3284.75

WATER BY-PASS

ITEM	PART NO.	QTY.	DESCRIPTION
1	32591.0007*	1	Tube, Silicone .50" I.D. x 8.75" (Order item 11)
2	12422.0009	2	Clamp, Hose .71”/.80” I.D.
3	12422.0005	4	Clamp, Hose .61”/.71” I.D.
4	27370.0000	2	Valve Assy, By-Pass
	00970.0000	4	Nut, Keps #8 - 32
5	20976.0006*	1	Tube, Silicone .375” I.D. x 4.50” (Order item 10)
6	12422.0001	2	Clamp, Hose .59”/.66” I.D.
7	32648.0000	2	Elbow, Compression
8	20976.0059*	1	Tube, Silicone .375" I.D. x .62" O.D. x 11.75" (Order item 10)
9	32591.0009*	1	Tube, Silicone .50” I.D. x 5.25” (Order item 11) (Late model Tank)
10	20976.1000	1	Tube, Silicone .375" I.D. x 12.0"
	20976.1001	1	Tube, Silicone .375" I.D. x 36.0"
	20976.1002	1	Tube, Silicone .375" I.D. x 120.0"
11	32591.1000	1	Tube, Silicone .50" I.D. x 36" LG

Not illustrated

* Indicates the part number listed is for reference only. See DESCRIPTION for possible service replacement.

DISPENSE VALVE & SPRAYHEAD

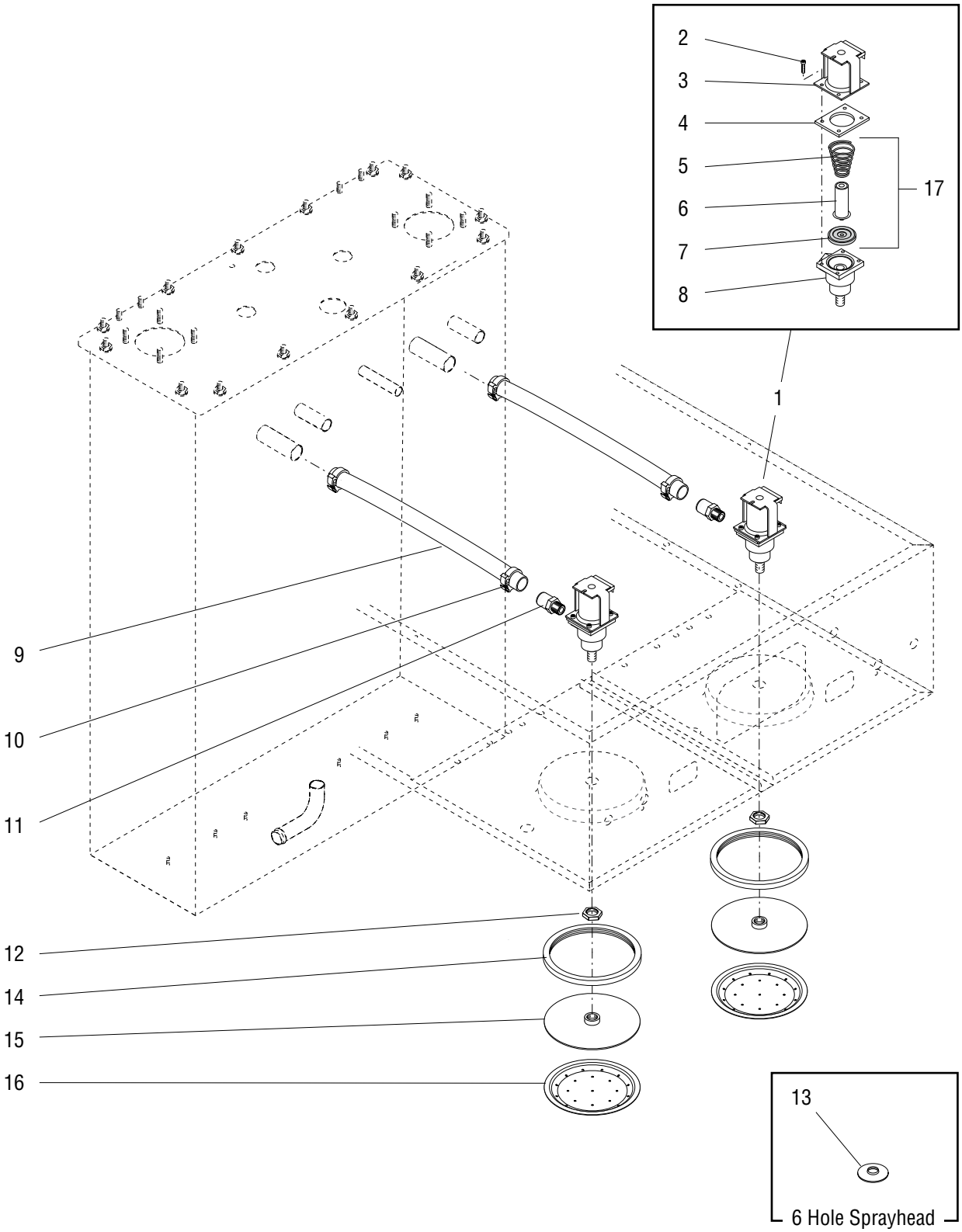

P3077.60

DISPENSE VALVE & SPRAYHEAD

ITEM	PART NO.	QTY.	DESCRIPTION
1	26846.0000	2	Valve Assy, Sprayhead (Includes items 2 thru 8)
2	23254.0000	4	Screw, #8 - 32
3	22305.0000	1	Coil Assy, Dispensing Valve
4	23256.0000	1	Spacer Plate
5	- - - - - - - -	1	Spring (Not available order item 18)
6	- - - - - - - -	1	Plunger (Not available order item 18)
7	23255.0000	1	Diaphragm
8	- - - - - - - -	1	Body (Not available order item 1)
9	35052.0000*	2	Tube, Silicone .75" I.D. x 6.25" LG (Order item 17) (Cut as required)
10	12422.0008	4	Clamp, Hose Snap-Type.93"/1.1" I.D.
11	34956.0000	2	Fitting, .250" NPTF Hose .750" NPS
12	01075.0000	2	Nut, Hex .438" - 20
13	01082.0002	2	Sprayhead, 6 Hole
14	34868.0000	2	Seal, Sprayhead
15	35070.0001	2	Sprayhead Back
16	34867.0004	2	Sprayhead
17	35052.1000	1	Tube, Silicone .75" I.D. x 1.0" O.D. x 12.0"
18	11517.0008	-	Repair Kit, Bypass & Dispense Valve (Includes one each of spring, plunger and diaphragm)
19	35308.1000	-	Sprayhead Assy (Includes one each of items 14, 15 & 16)
20	20976.1000	1	Tube, Silicone .375" I.D. x 12.0"
	20976.1001	1	Tube, Silicone .375" I.D. x 36.0"
	20976.1002	1	Tube, Silicone .375" I.D. x 120.0"

Refer to Item 19

Not illustrated

* Indicates the part number listed is for reference only. See DESCRIPTION for possible service replacement.

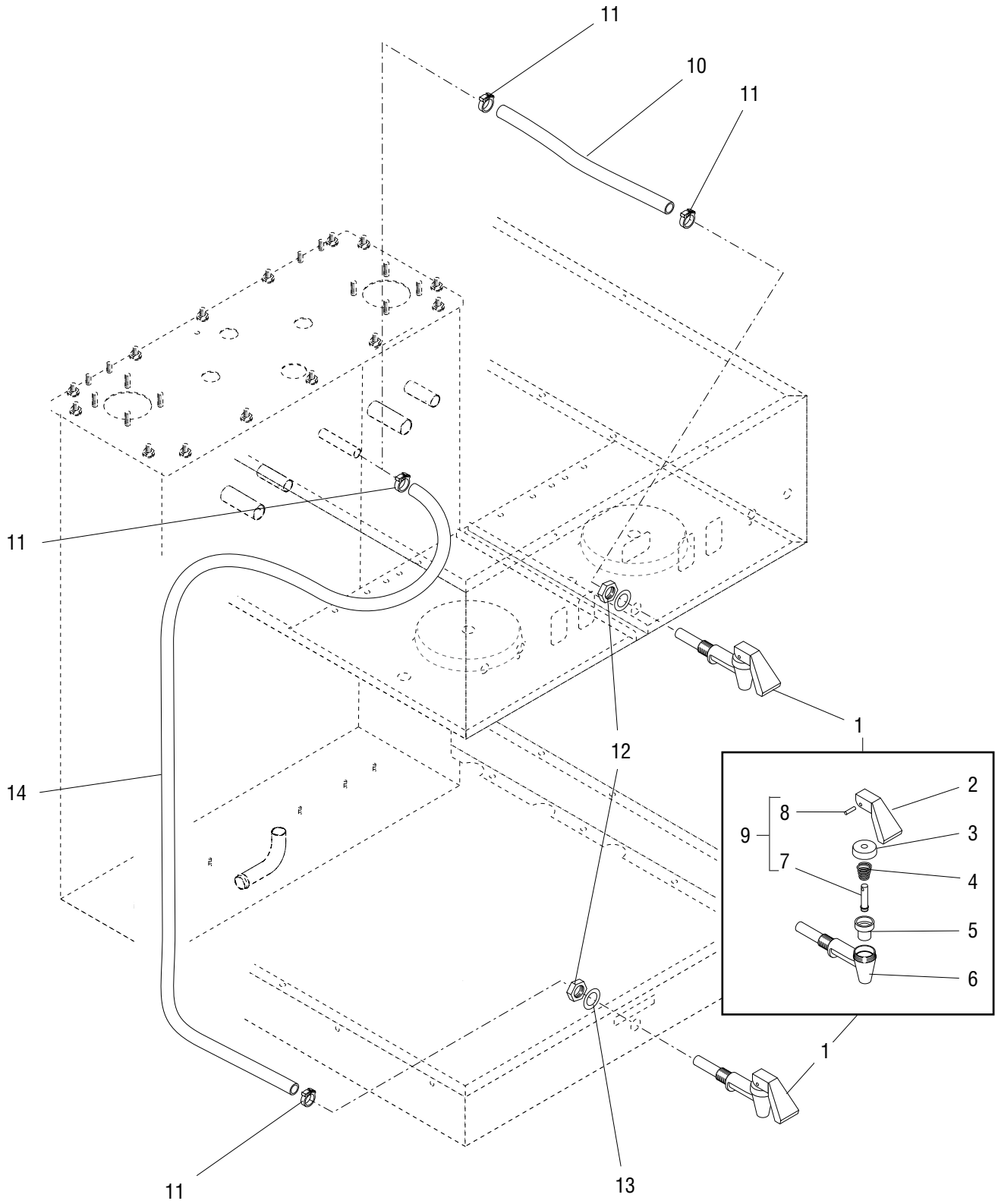

Only one Faucet location option (Upper or Lower) is applicable to each Brewer

P3078.80

FAUCET

ITEM	PART NO.	QTY.	DESCRIPTION
1	29075.0000	1	Faucet Assy (Includes items 2 thru 9)
2	02861.0000	1	Handle, Faucet
3	02854.0000	1	Bonnet, Faucet
4	02595.0000	1	Spring, Faucet
5	02766.0000	1	Seat Cup, Faucet
6	02856.0002	1	Body, Faucet
7	13054.0000	1	Stem, Faucet
8	02858.0000	1	Pin, Spring .125" Dia. x .50"
9	02594.0000	1	Faucet Stem W/Pin (Includes items 7 & 8)
10	20976.0059*	1	Tube, Silicone .38" I.D. x .62" O.D. x 11.75" (Order item 15) (Optional Upper Faucet)
11	12422.0001	2	Clamp, Hose .59" x .66" I.D.
12	29264.0000	1	Nut, Faucet Retaining
13	01544.0000	1	Washer, .50" I.D. x .75" O.D.
14	20976.0066*	1	Tube, Silicone .38" I.D. x .62" O.D. x 48.0" (Order Item 15) (Lower Faucet Only)
15	20976.1000	1	Tube, Silicone .38" I.D. x .62" O.D. x 12.0"
	20976.1001	1	Tube, Silicone .38" I.D. x .62" O.D. x 36.0"
	20976.1002	1	Tube, Silicone .38" I.D. x .62" O.D. x 120.0"
16	28706.0002	-	Faucet Kit (Includes items 2,4,5, 7 & 8)
17	M2517.0000	-	Sealant, Pipe 6 ml

Not Illustrated

* Indicates the part number listed is for reference only. See DESCRIPTION for possible service replacement.

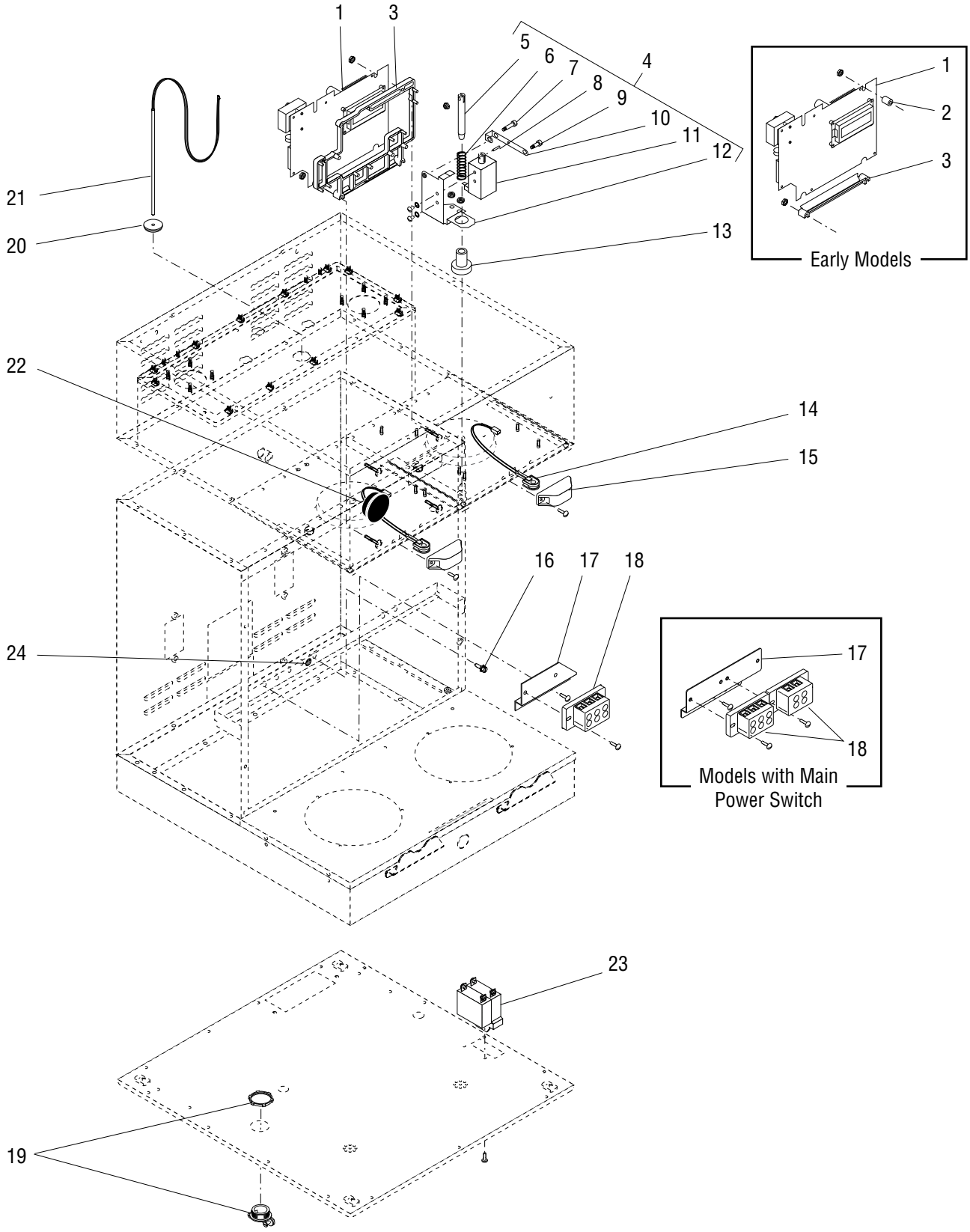
1
3
5
6
7
8
9
10
11
12
4
21
20
13
22
14
15
16
17
18
24
23
19
Early Models
Models with Main Power Switch

P3079.40

ELECTRICAL CONTROLS

ITEM	PART NO.	QTY.	DESCRIPTION
1	29969.1014	1	Circuit Board, Main control (Brewers with Product #35900.0000)
	29969.1038	1	Circuit Board, Main control (Brewers with Product #35900.0001)
	29969.1000	1	Circuit Board, Main control (Brewers with Product #35900.0010)
	00973.0000	2	Nut, Keps #6-32
2	01533.0010	2	Spacer (Early models)
3	29970.0000	1	Mount, Circuit Board (Early models)
	40726.0000	1	Mount, Circuit Board (Late models)
	00973.0000	2	Nut, Keps #6-32
4	29499.1000	2	Solenoid Assy 120V (Includes items 5 thru 12)
	00970.0000	4	Nut, Keps #8-32
5	29494.0000	2	Pin, Funnel Stop
6	28897.0000	2	Spring, Compression
7	29504.0001	2	Shoulder Screw
8	26247.0001	2	Pin, Spring
9	29504.0000	2	Shoulder Screw
	00991.0000	2	Nut, Elastic Lock #8-32
10	29493.0000	2	Lever
11	29503.0000	2	Coil, Solenoid 120/208V & 120/240V
	33613.0000	4	Screw, Truss Head #8-32 x .25”
	01519.0000	4	Lockwasher, Split #8
12	29492.0000	2	Bracket, Solenoid
13	29495.0000	2	Guide, Pin
14	- - - - - - - -	2	Sensing Coil WO/Leads (Early models) (Not available order item 29)
	32572.1001	1	Sensing Coil W/Violet Leads (Includes plug below)
	32572.1002	1	Sensing Coil W/Yellow Leads (Includes plug below)
	20621.0000	2	Plug, hole .203" Dia. (Not illustrated)
15	32573.0000	2	Cover, Sensing Coil
	01382.0007	4	Screw, Truss Head #6-32 x .38"
16	01309.0000	1	Ground Screw W/Terminal Washer #10-32 x .50"
	01512.0000	1	Lockwasher #10
17	23004.0000	1	Bracket, Terminal Block Mounting
	39248.0000	1	Bracket, Terminal Block Mounting (Models with Main Power Switch)
	02308.0000	2	Screw, Pan Head #8-32 x .38"
18	07038.0000	1	Terminal Block, 3 Pole (BLK/RED/WHI)
	01106.0001	1	Terminal Block, 2 Pole (BLK/RED)
	01317.0000	2	Screw, Truss Head #8-32 x .50"
19	01590.0000	1	Connector, Cable
	01531.0000	1	Washer, Reducing
20	12570.0000	1	Grommet, Temperature Sensor
21	29327.0000	1	Probe Kit, Temperature/Dry Plug

(continued)

* Indicates the part number listed is for reference only. See DESCRIPTION for possible service replacement.

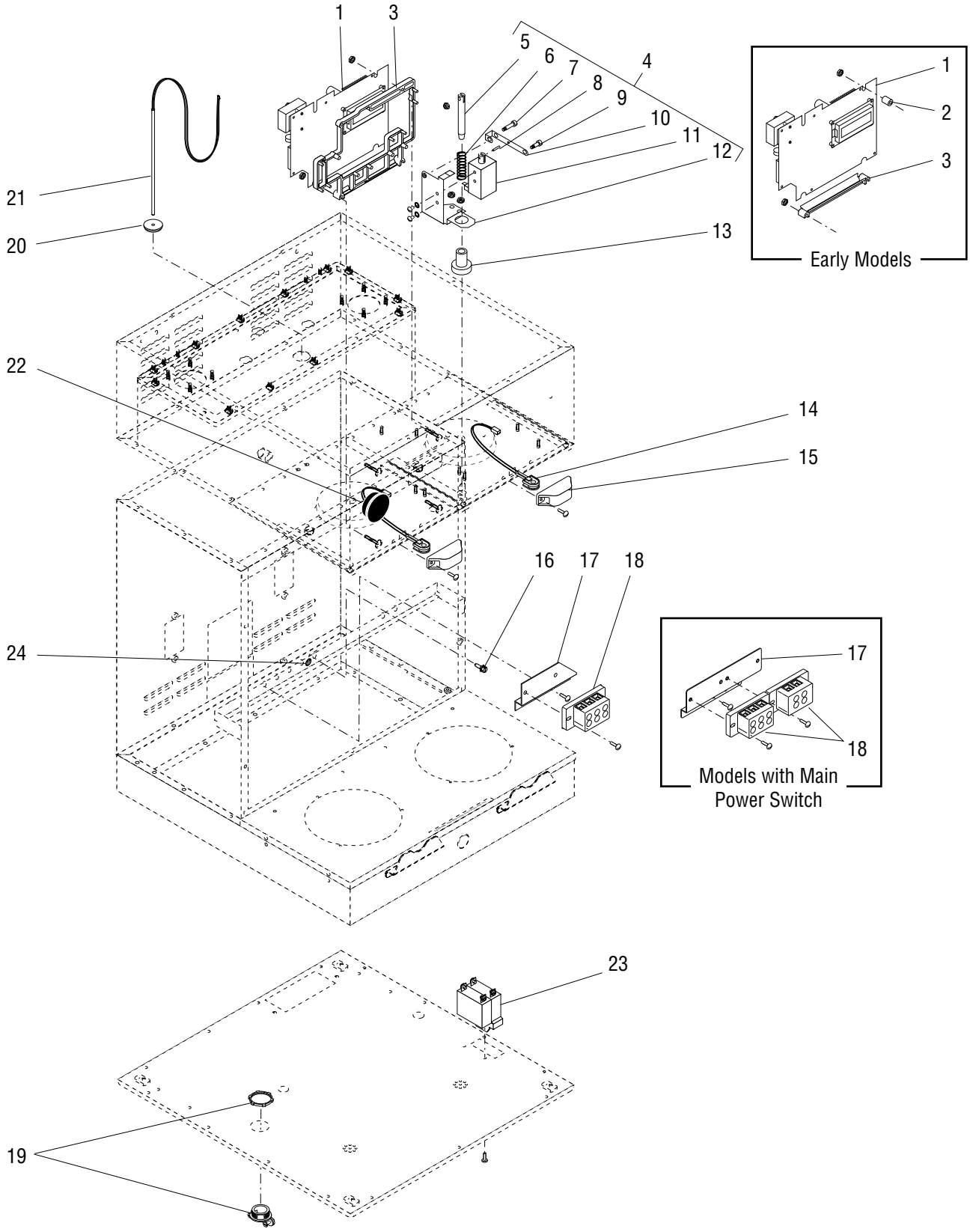
1
3
5
6
7
8
9
10
11
12
4
21
20
13
22
14
15
16
17
18
24
23
19
Early Models
Models with Main Power Switch

P3079.40

ELECTRICAL CONTROLS

ITEM	PART NO.	QTY.	DESCRIPTION
22	32018.0000	1	Bumper (Early models)
23	38894.0001	1	Switch, Main Power (Not used on all models)
	01308.0002	2	Screw, Truss Head #6-32 x .25" (Switch Mounting)
	01327.0000	4	Screw, Pan Head #10-32 x .375"
	01512.0000	4	Lockwasher, External Tooth #10
24	00824.0002	1	Decal, Ground

Note: The following parts are not illustrated

25	33634.0000	1	Wiring Harness, Main
26	37859.0005	1	Wiring Harness, Main Power Switch
27	00603.0000	2	Clamp, Cable .438" I.D.
	02308.0000	2	Screw, Pan Head #8-32 x .38"
28	04831.0000	1	Clamp, Routing-Vinyl Dipped
29	38338.0000	-	Kit, Funnel Sensors (Includes left and right Funnel Sensor Coils W/Leads)

* Indicates the part number listed is for reference only. See DESCRIPTION for possible service replacement.

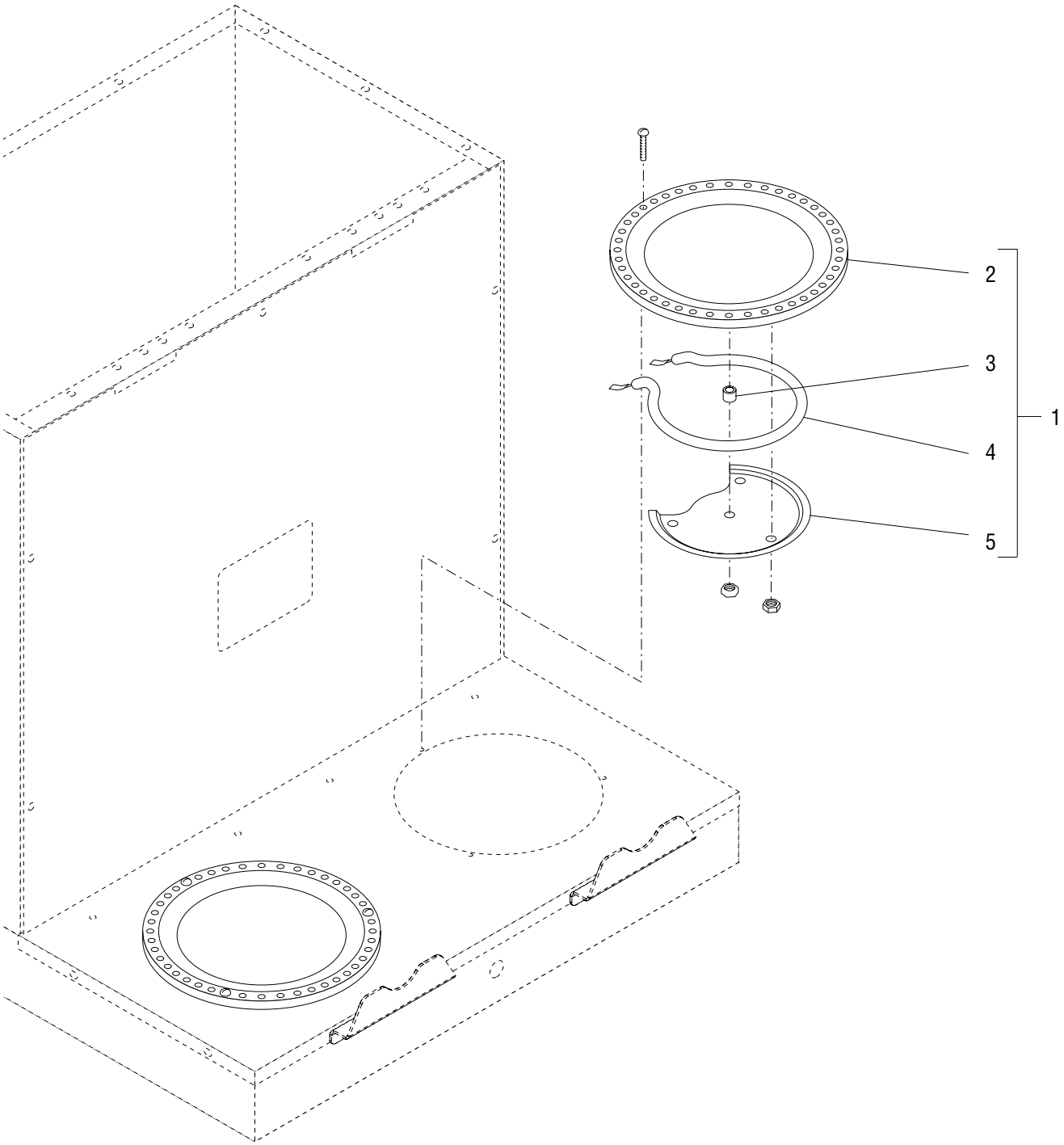

P312.80

WARMER ASSEMBLIES

ITEM	PART NO.	QTY.	DESCRIPTION
1	03652.0000	2	Warmer Assy, BLK 100W 120V (Includes items 2 thru 5)
	01303.0000	6	Screw, Pan Head #4 - 40 x .50"
2	03656.0000	1	Warmer Dish, BLK - 45 Hole
3	13042.0001	1	Spacer, .174" I.D. x .188"
4	01227.0000	1	Warmer Element, 100W 120V
5	05212.0000	1	Plate, Warmer Retainer
	00970.0000	2	Nut, Keps 8 - 32

* Indicates the part number listed is for reference only. See DESCRIPTION for possible service replacement.

FUNNEL

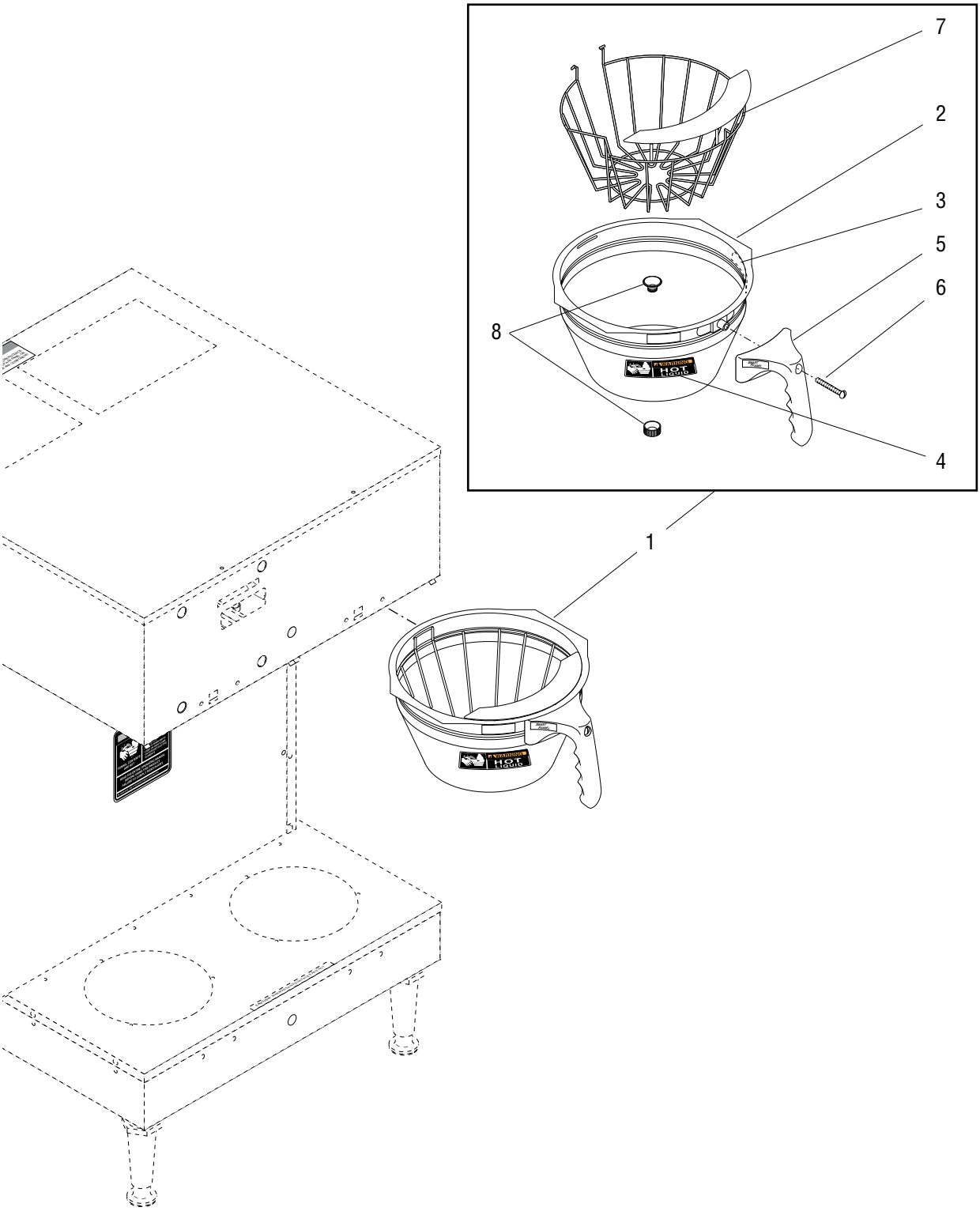

P3103.50

FUNNEL

ITEM	PART NO.	QTY.	DESCRIPTION
1	32643.0000	2	Funnel Assy, SST (Each includes Items 2 thru 8)
2	24462.0002	1	Funnel W/Decals (Includes items 3 & 4)
3	03408.0004	1	Decal, Warning-Remove Funnel
4	03409.0004	1	Decal, Warning-Hot Liquid
5	32595.0000	1	Handle, Funnel-Black
6	12499.0002	1	Screw, Round Head .25" - 20 x 1.50" BLK
7	33089.0000	1	Filter Basket w/Splash Guard
8	01031.0001	1	Funnel Tip Kit

* Indicates the part number listed is for reference only. See DESCRIPTION for possible service replacement.

NUMERICAL INDEX

PART NO.	PAGE NO.
00506.0000	5
00603.0000	25
00656.0000	5
00658.0000	5
00824.0002	25
00908.0000	9,11
00916.0000	5
00946.0000	9
00970.0000	17,23
00970.0000	7,27
00971.0000	9
00973.0000	23
00976.0000	13
00986.0000	5
00991.0000	23
01031.0001	29
01075.0000	19
01082.0002	19
01106.0001	23
01227.0000	27
01303.0000	27
01308.0002	25
01309.0000	23
01311.0000	5
01315.0000	13
01317.0000	23
01321.0000	9
01327.0000	25
01347.0000	7
01382.0003	5,7
01382.0007	23
01388.0000	9
01501.0000	9
01512.0000	23,25
01514.0000	13
01519.0000	23
01520.0000	9
01522.0000	13
01531.0000	23
01533.0005	9
01533.0010	23
01544.0000	21
01590.0000	23
02308.0000	5,11,13,23,25
02324.0000	7
02328.0003	9
02336.0000	5
02336.0002	5
02434.0010	9
02434.1000	9
02536.0000	9,13,15
02594.0000	21
02595.0000	21
02766.0000	21
02854.0000	21
02856.0002	21
02858.0000	21
02861.0000	21
03011.0000	7
03236.0024	9
03236.1000	9
03236.1001	9
03236.1002	9
03236.1003	9
03408.0004	29
03409.0004	29
03633.0000	9
03652.0000	27
03656.0000	27
03803.0000	9
03807.0000	9
03851.0000	9
03996.0000	5
04797.0000	9
04831.0000	25
05212.0000	27
05749.0004	5
07038.0000	23
11517.0008	19
11630.0001	13,15
12364.0000	5
12398.0002	9
12418.0001	15
12422.0001	9,15,17,21
12422.0005	17
12422.0008	19
12422.0009	13,15,17
12499.0002	29
12565.0011	9
12570.0000	23
12756.0000	13
12757.0000	13
13042.0001	27
13054.0000	21
13255.0003	7
20201.5600	5
20203.0100	9
20541.0001	9
20621.0000	23
20878.1008	11
20881.0000	11
20883.0000	11
20884.1000	5
20916.0002	5
20916.0008	5
20916.0009	5
20916.0012	5
20922.1000	9
20924.0003	5
20936.1000	9
20937.0004	13,15
20976.0000	15
20976.0006	17
20976.0059	17,21
20976.0066	21
20976.1000	15,17,19,21
20976.1001	15,17,19,21
20976.1002	15,17,19,21
21104.0003	7
21104.0006	7
21106.0000	5
21801.0002	9
22305.0000	19
22728.0000	9
23004.0000	23
23254.0000	19
23255.0000	19
23256.0000	19
23717.0003	9
24455.0000	5
24462.0002	29
25151.0000	5
25376.0000	5
25376.0002	5
26247.0001	23
26528.0000	5
26622.0001	9
26826.0000	11
26846.0000	19
26949.0000	5
27370.0000	17
27473.0000	9
28706.0002	21
28897.0000	23
29075.0000	21
29264.0000	21
29327.0000	23
29421.0000	13,15
29492.0000	23
29493.0000	23
29494.0000	23
29495.0000	23
29499.1000	23
29503.0000	23
29504.0000	23
29504.0001	23
29876.0004	5
29969.1000	23
29969.1014	23
29969.1038	23
29970.0000	23
29974.0004	5
32018.0000	25
32283.0000	15
32359.0000	13,15
32572.1001	23
32572.1002	23
32573.0000	23
32591.0007	17
32591.0009	17
32591.1000	17
32591.1002	13,15
32595.0000	29
32643.0000	29
32648.0000	17
32649.0000	7
33089.0000	29
33613.0000	23
33634.0000	25
34768.0001	13
34867.0004	19
34868.0000	19
34956.0000	19
35052.0000	19
35052.1000	19
35070.0001	19
35086.0000	13,15
35094.0001	13
35291.0000	7
35308.1000	19
35388.1003	5
36085.0000	13
36088.0000	13
36089.0001	13
36233.0000	15
37127.0001	13
37129.0000	11
37132.1000	5
37132.1001	5
37135.1000	5
37297.0001	15
37526.0000	11
37761.0000	13
37762.0000	13
37762.0001	13
37766.0000	5
37859.0005	25
37881.0000	5
38338.0000	25
38392.0000	11
38894.0001	25
39248.0000	23
39803.0000	7
40726.0000	23
41640.0000	15
43386.0000	9
M2517.0000	21
M2522.1000	9