BUNN®

HC-1

(prior to S/N HC00025000)

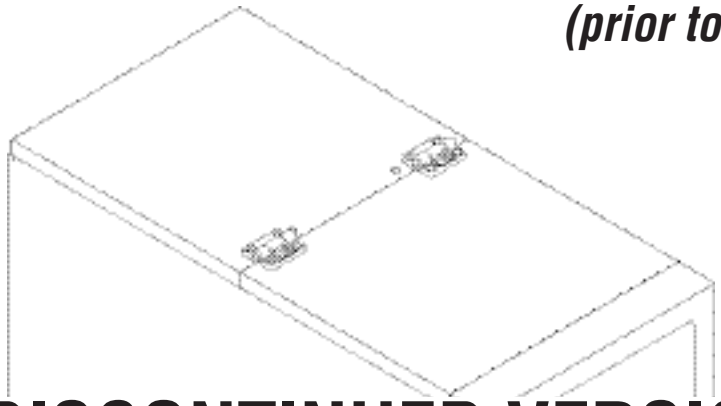

DISCONTINUED VERSION
Parts listed in this catalog may no longer be available.

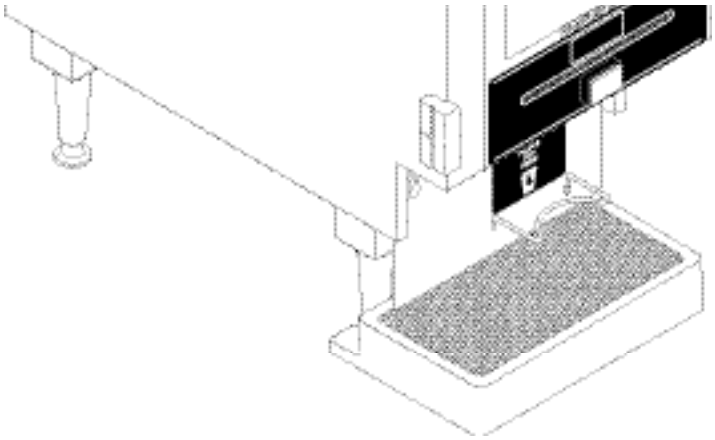

ILLUSTRATED PARTS CATALOG

Designs, materials, weights, specifications, and dimensions for equipment or replacement parts are subject to change without notice.

BUNN-O-MATIC CORPORATION

POST OFFICE BOX 3227
SPRINGFIELD, ILLINOIS 62708-3227
PHONE: (217) 529-6601 FAX: (217) 529-6644

www.bunnomatic.com

26531.0001 03/02 ©1995 Bunn-O-Matic Corporation

WARRANTY

Bunn-O-Matic Corp. ("Bunn") warrants the equipment manufactured by it to be commercially free from defects in material and workmanship existing at the time of manufacture and appearing within one year from the date of installation. In addition:

1.) Bunn warrants electronic circuit and/or control boards to be commercially free from defects in material and workmanship for three years from the date of installation.

2.) Bunn warrants the compressor on refrigeration equipment to be commercially free from defects in material and workmanship for two years from the date of installation.

3.) Bunn warrants that the grinding burrs on coffee grinding equipment will grind coffee to meet original factory screen sieve analysis for three years from date of installation or for 30,000 pounds of coffee, whichever comes first.

This warranty does not apply to any equipment, component or part that was not manufactured by Bunn or that, in Bunn's judgement, has been affected by misuse, neglect, alteration, improper installation or operation, improper maintenance or repair, damage or casualty.

THE FOREGOING WARRANTY IS EXCLUSIVE AND IS IN LIEU OF ANY OTHER WARRANTY, WRITTEN OR ORAL, EXPRESS OR IMPLIED, INCLUDING, BUT NOT LIMITED TO, ANY IMPLIED WARRANTY OF EITHER MERCHANTABILITY OR FITNESS FOR A PARTICULAR PURPOSE. The agents, dealers or employees of Bunn are not authorized to make modifications to this warranty or to make additional warranties that are binding on Bunn. Accordingly, statements by such individuals, whether oral or written, do not constitute warranties and should not be relied upon.

The Buyer shall give Bunn prompt notice of any claim to be made under this warranty by telephone at (217) 529-6601 or by writing to Post Office Box 3227, Springfield, Illinois, 62708-3227. If requested by Bunn, the Buyer shall ship the defective equipment prepaid to an authorized Bunn service location. If Bunn determines, in its sole discretion, that the equipment does not conform to the warranty, Bunn shall repair the equipment with no charge for parts during the warranty period and no charge for labor by a Bunn Authorized Service Representative during the warranty period. If Bunn determines that repair is not feasible, Bunn shall, at its sole option, replace the equipment or refund the purchase price for the equipment.

THE BUYER'S REMEDY AGAINST BUNN FOR THE BREACH OF ANY OBLIGATION ARISING OUT OF THE SALE OF THIS EQUIPMENT, WHETHER DERIVED FROM WARRANTY OR OTHERWISE, SHALL BE LIMITED, AS SPECIFIED HEREIN, TO REPAIR OR, AT BUNN'S SOLE OPTION, REPLACEMENT OR REFUND.

In no event shall Bunn be liable for any other damage or loss, including, but not limited to, lost profits, lost sales, loss of use of equipment, claims of Buyer's customers, cost of capital, cost of down time, cost of substitute equipment, facilities or services, or any other special, incidental or consequential damages.

TABLE OF CONTENTS

Auger Drive and Hopper Assembly 8
Covers, Panels and Drip Tray 4
Dispense Valves and Lines 16
Door, Lamps and Panels 6
Electrical Controls 18
Mixing/Whipper Chambers and Drive Motor 10
Numerical Index 20
Strainer, Solenoid, Fill Valve and Lines 14
Tank, Heater and Overflow Protection 12

COVERS, PANELS AND DRIP TRAY

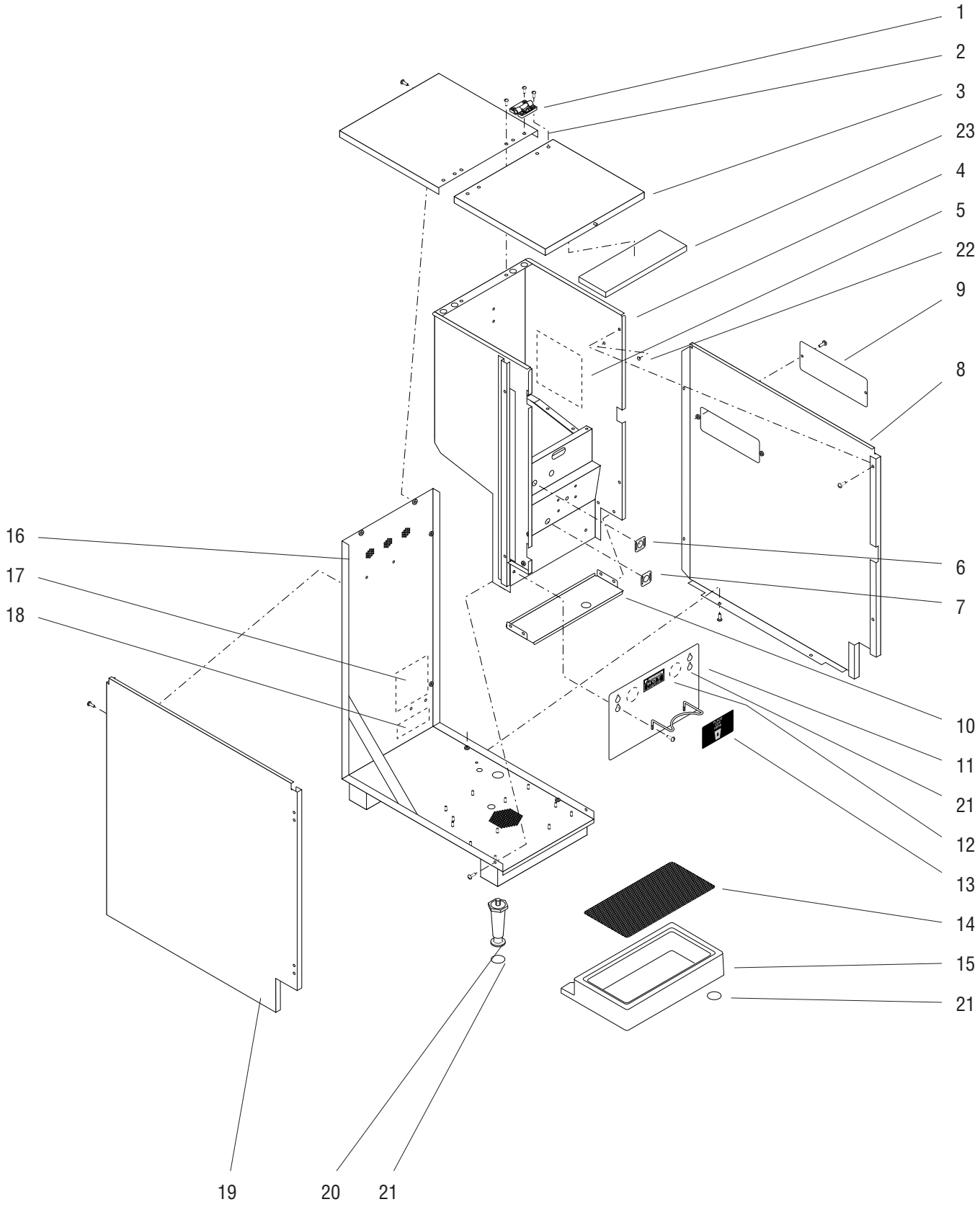

COVERS, PANELS AND DRIP TRAY

ITEM	PART NO.	QTY.	DESCRIPTION
1	26504.0000	2	Hinge
	02308.0000	8	Screw, Pan Head #8 - 32 x .375"
2	25796.0000	1	Cover, Top Rear (SST)
	25796.0001	1	Cover, Top Rear (Black)
	02331.0000	4	Screw, Truss Head #10 - 32 x .375" (SST)
	02331.0001	4	Screw, Truss Head #10 - 32 x .375" (Black)
3	25901.0000	1	Cover, Top Front (SST) — Also order item 23
	25901.0001	1	Cover, Top Front (Black)
4	- - - - - - - -	1	Panel W/Decals, Front (Not available)(Early Models without Hopper Delay)
	- - - - - - - -	1	Panel W/Decals, Front (Not available)(Late Models with Hopper Delay)
	02331.0000	2	Screw, Truss Head #10 - 32 x .375"
5	26532.0001	1	Schematic, 120 & 120/240V (Early Models without Hopper Delay)
	26702.0001	1	Schematic, 120 & 120/240V (Late Models with Hopper Delay)
6	26524.0000	1	Decal, Tank Heater Switch
7	26523.0000	1	Decal, Rinse/Run Switch
8	26232.0000	1	Cover, Right Side (SST)
	26232.0001	1	Cover, Right Side (Black)
	01311.0000	6	Screw, Truss Head #8 - 32 x .25"
9	25414.0000	1	Cover, Access (SST)
	25414.0001	1	Cover, Access (Black)
	01311.0000	2	Screw, Truss Head #8 - 32 x .25" (SST)
	01311.0003	2	Screw, Truss Head #8 - 32 x .25" (Black)
10	26233.0001	1	Panel, Splash
	01311.0000	4	Screw, Truss Head #8 - 32 x .25"
11	26757.0000	1	Plate W/Decals, Cup Stop (Includes items 12, 13 & 2 of item 21)
	01311.0001	2	Screw, Truss Head #8 - 32 x .25" Locking
12	12368.0001	1	Decal, Caution-Hot Liquid
13	26576.0001	1	Decal, Cup Placement
14	26509.0000	1	Cover, Drip Tray
15	26886.1000	1	Drip Tray Assy (Includes 4 of item 21)
16	26751.0000	1	Cover W/Decals, Rear & Bottom (Includes items 17 & 18)
17	00831.0000	1	Decal, Warning-Electrical
18	00656.0000	1	Decal, Comply to Plumbing Code
19	25887.0000	1	Cover, Left Side (SST)
	25887.0001	1	Cover, Left Side (Black)
	01311.0000	6	Screw, Truss Head #8 - 32 x .25"
20	26528.0000	4	Leg, 4.0” Adjustable (Also see item 24)
21	03996.0000	10	Pad, Rubber 1.25" Dia.
22	20621.0000	6	Plug, Hole .203" Dia.
23	26667.0000	1	Pad, Hopper Retaining (Self Adhesive)
24	13255.0003	1	Kit, Leg 4.0" Adjustable (Includes 4 each of items 20 & 21) (Not illustrated)

DOOR, LAMPS AND PANELS

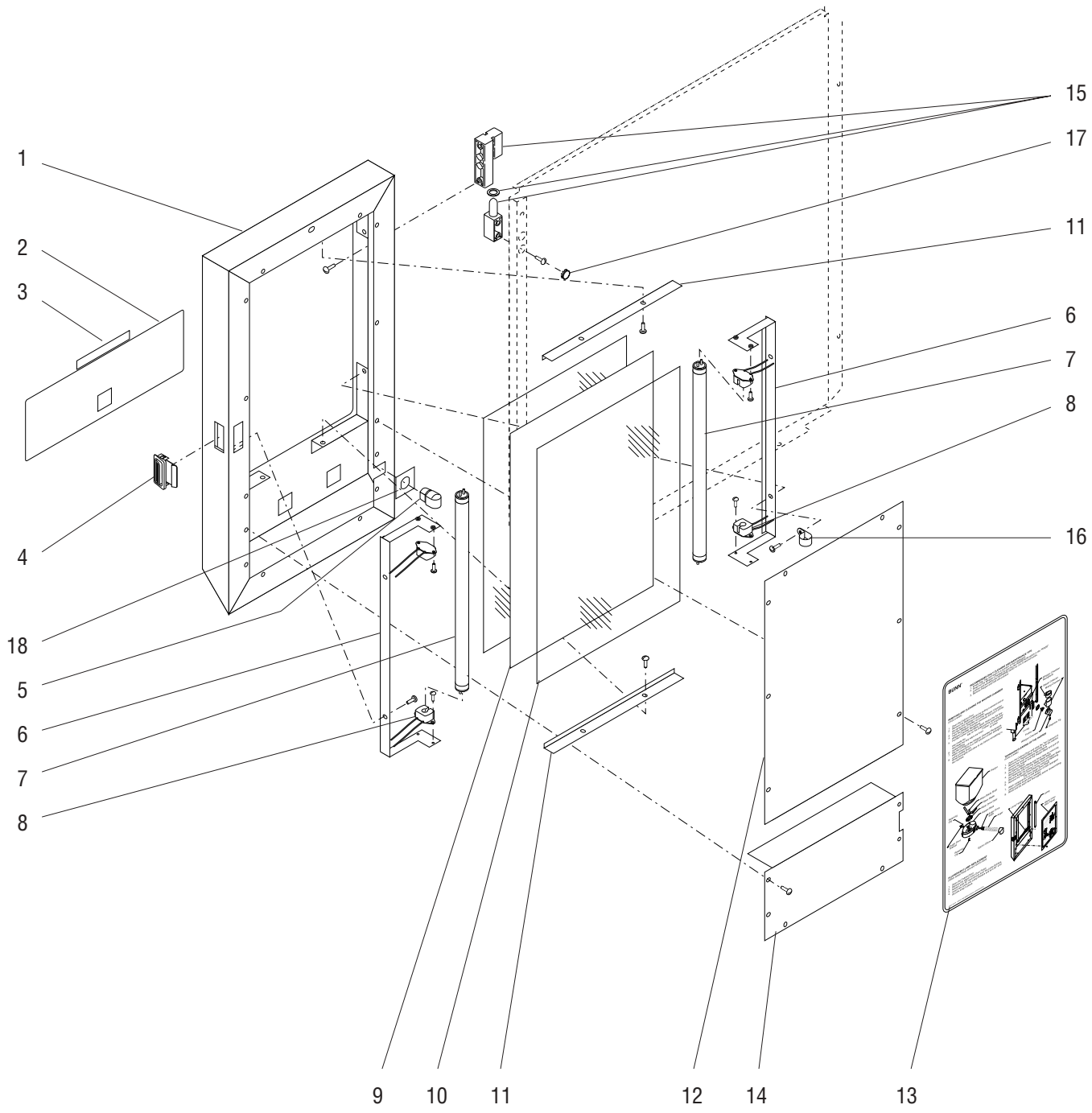

P916

DOOR, LAMPS AND PANELS

ITEM	PART NO.	QTY.	DESCRIPTION
1	26752.0000	1	Door W/Decals (SST) (Includes Item 3 - also order item 2)
	26752.0001	1	Door W/Decals (Black) (Includes Item 3 - also order item 2)
2	26525.0001	1	Decal, Door Front
3	11646.0000	1	Decal, Caution Hot Liquids
4	25898.0000	1	Latch
5	26444.0000	2	Bushing, Strain Relief
6	26353.0000	2	Bracket, Lamp
	02308.0000	4	Screw, Pan Head #8 - 32 x .375"
7	26239.0000	2	Lamp, Fluorescent - 8 Watts
8	26539.0000	4	Lamp Holder, Fluorescent
	02361.0000	8	Screw, Pan Head #4 - 40 x .25"
9	26520.0000	1	Display, Graphics (Cafe Scene)
	26520.0001	1	Display, Graphics (Fireside Scene)
10	26348.0000	2	Window
11	26354.0000	2	Clamp, Window
	02308.0000	4	Screw, Pan Head #8 - 32 x .375"
12	26756.0000	1	Cover W/Decal, Door - Upper (Includes item 13)
	01311.0000	8	Screw, Truss Head #8 - 32 x .25"
13	26521.0001	1	Decal, Cleaning
14	26350.0000	1	Cover, Door - Bottom
	01311.0000	6	Screw, Truss Head #8 - 32 x .25"
15	25897.0000	2	Hinge, Door
	02331.0000	8	Screw, Truss Head #10 - 32 x .375"
16	05920.0000	2	Clamp, Cable
17	00619.0010	4	Plug, Hole .438" Dia.
18	26892.0000	1	Plate, Strain Relief
19	26507.0000	1	Wiring Harness, Door Interconnect (Includes item 18 & 1 of item 5)
20	26506.0000	1	Wiring Harness, Door
21	26537.0000	1	Decal, Flavors

Not illust.

AUGER DRIVE AND HOPPER ASSEMBLY

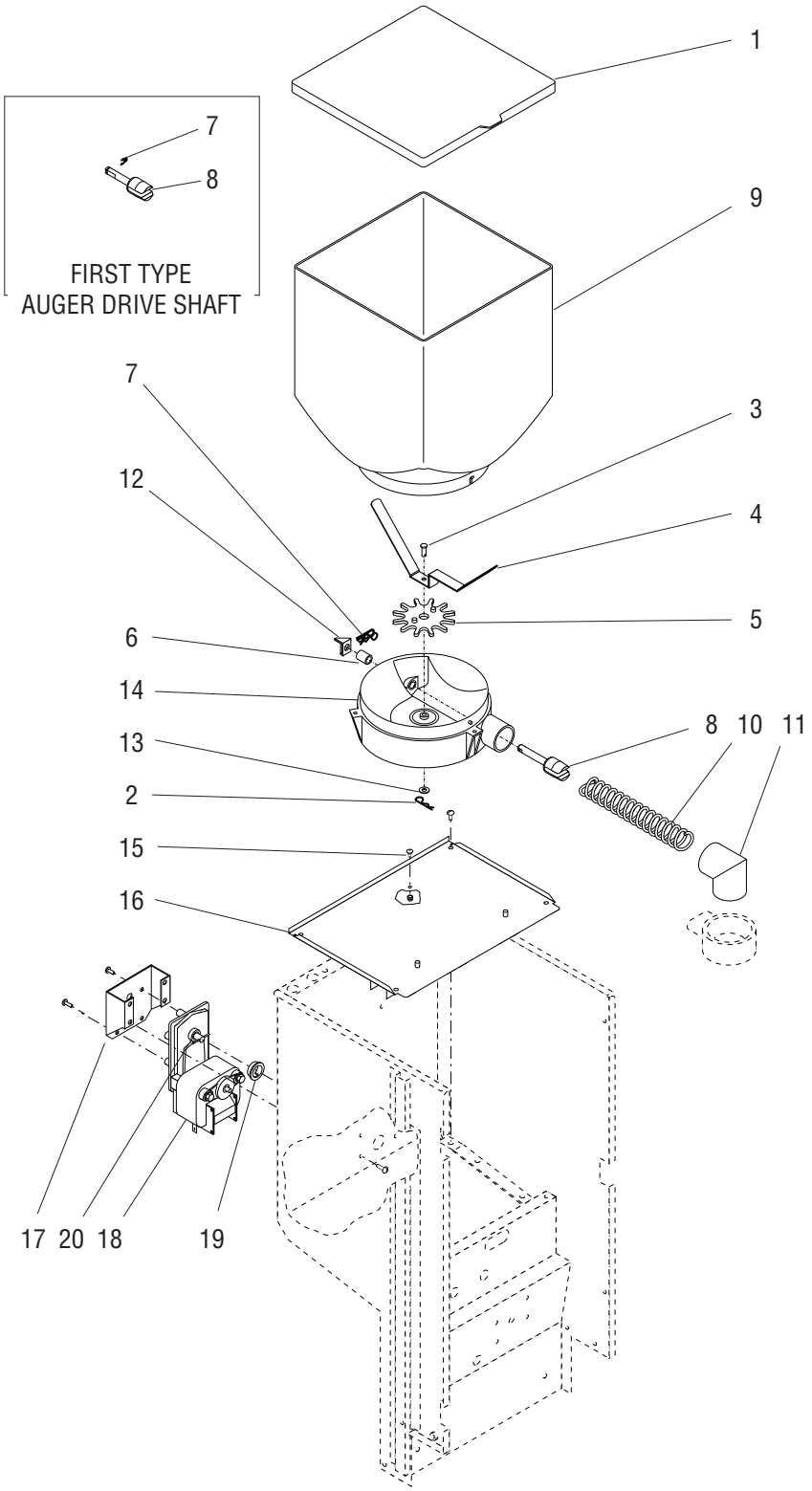

P917

AUGER DRIVE AND HOPPER ASSEMBLY

ITEM	PART NO.	QTY.	DESCRIPTION
-	25894.1000	1	Hopper & Auger Drive Assy (8 Tooth Drive Gear) (Includes items 1 thru 14)
1	25904.0000	1	Lid, Hopper
2	21358.0000	1	Clip, Retainer
3	21357.0000	1	Shaft, Wiper
4	21747.0000	1	Blade, Wiper
5	26680.0000	1	Gear, Wiper Drive (8 Teeth)
	21746.0000	1	Gear, Wiper Drive (12 Teeth)
6	25892.0000	1	Spacer .312" I.D. x .437" O.D. x .56" LG
7	21745.0000	1	Clip, Retainer (First Type)
	21358.0000	1	Clip, Retainer (Second Type)
8	- - - - - - - -	1	Shaft, Auger Drive (First Type. Not available, order second type Shaft and item 7))
	26940.0001	1	Shaft, Auger Drive (Second Type)
9	25895.0000	1	Hopper
10	26112.0000	1	Auger, Wire (Use with 8 Tooth Wiper Drive Gear)
	21355.0000	1	Auger, Wire (Use with 12 Tooth Wiper Drive Gear)
11	25903.0000	1	Elbow, Ejector
12	25744.0000	1	Bracket, Auger Drive
13	01522.0000	1	Washer .203" I.D. x .50" O.D.
14	25891.0000	1	Base, Hopper
15	20960.0000	1	Screw, Shoulder #6 - 32 x .375"
	01520.0000	1	Lockwasher, Split #6 — Early Models
	00906.0000	1	Nut, Hex #6 - 32 — Early Models
	00991.0002	1	Nut, Locking #6 - 32 (Late Models)
16	26238.0001	1	Panel, Hopper Support
	01311.0000	4	Screw, Truss Head #8 - 32 x .25"
17	25794.0000	1	Bracket, Motor Mounting
	01311.0001	4	Screw, Truss Head #8 - 32 x .25" Locking
18	26754.0000	1	Gearmotor W/Pin, Auger (Includes item 20)
	01311.0000	4	Screw, Truss Head #8 - 32 x .25"
19	26401.0000	1	Dust Seal, Hopper Motor
20	26247.0000	1	Pin, Spring .094" Dia. x 1.0"

MIXING/WHIPPER CHAMBER AND DRIVE MOTOR

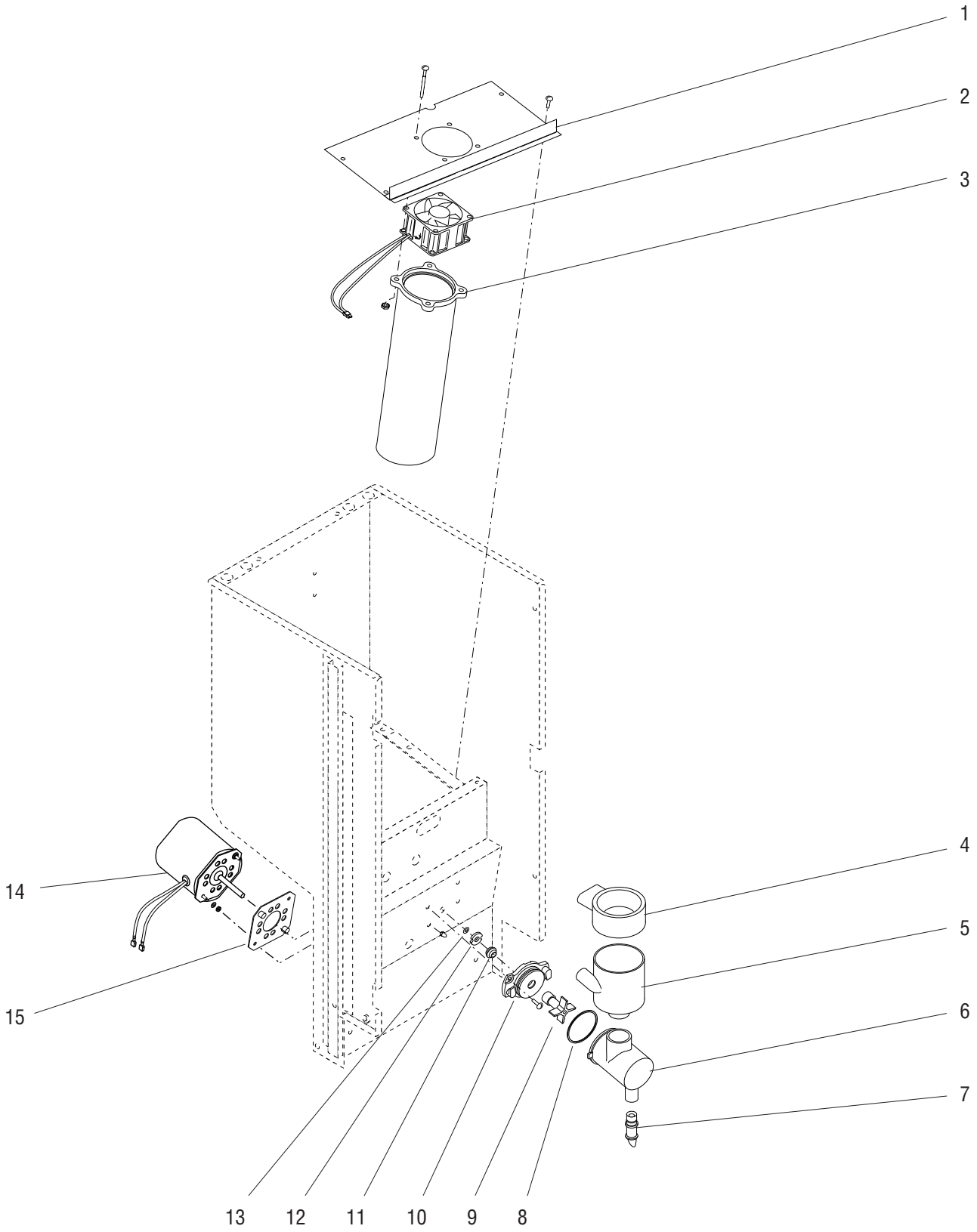

P918

MIXING/WHIPPER CHAMBER AND DRIVE MOTOR

ITEM	PART NO.	QTY.	DESCRIPTION
1	26926.0000	1	Plate, Fan Mounting
	01311.0001	4	Screw, Locking Truss Head #8 - 32 x .25"
2	26392.0000	1	Fan Assembly
3	26244.1000	1	Tube, Exhaust
	01384.0000	4	Screw, Truss Head #8 - 32 x 1.50"
	00970.0000	4	Nut, Keps #8 - 32
4	25732.0000	1	Steam Collector
5	25733.0000	1	Mixing Chamber
6	25734.0000	1	Whipper Chamber
7	25736.0000	1	Dispense Tip
8	24733.0010	1	O-Ring
9	25902.0000	1	Frother
10	26359.0000	1	Receptacle, Whipper Chamber
	02328.0003	2	Screw, Pan Head #6 - 32 x .312"
11	26356.0000	1	Seal, Shaft
12	26355.0000	1	Washer, Teflon
13	24331.0000	1	O-Ring
14	26393.1000	1	Motor, Whipper (Includes item 15)
	02324.0000	2	Nut, Acorn - High Crown #8 - 32
15	34179.0000	1	Plate

TANK, HEATER AND OVERFLOW PROTECTION

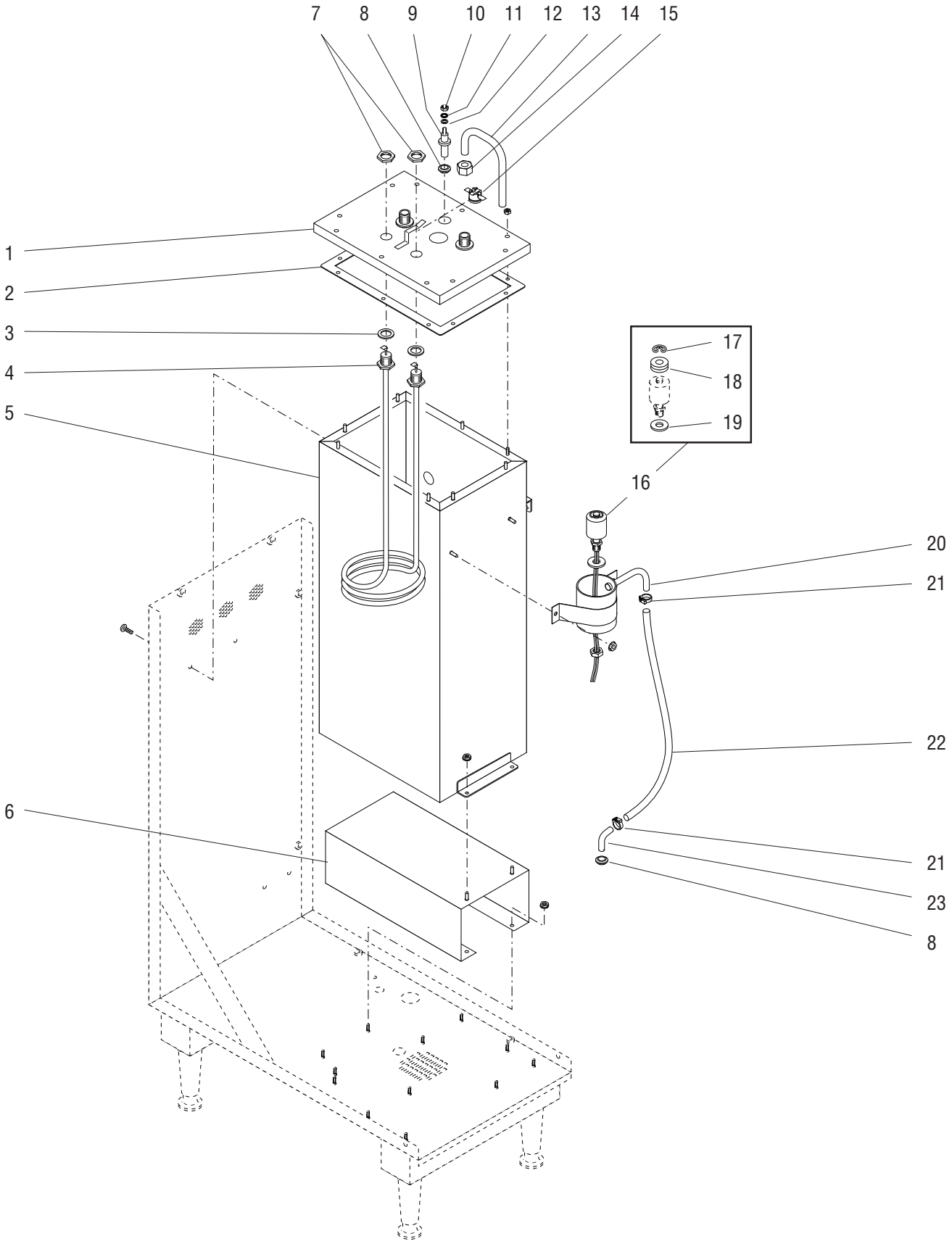

P903

TANK, HEATER AND OVERFLOW PROTECTION

ITEM	PART NO.	QTY.	DESCRIPTION
1	23199.0002	1	Lid, Tank
	00908.0000	10	Nut, Hex #8 - 32
2	22978.0000	1	Gasket, Tank Lid
3	00943.0000	2	Gasket, Tank Heater
4	20201.4151	1	Tank Heater Kit, 1700W 120V
	20201.4150	1	Tank Heater Kit, 1800W 120V — Includes item 3
	20201.0750	1	Tank Heater Kit, 3500W 240V
5	24547.0001	1	Tank
	00970.0000	2	Nut, Keps #8 - 32
	02332.0002	2	Screw, Truss Head #8 - 32 x .375" BLK
6	26636.0000	1	Bracket, Tank Mounting
	00970.0000	2	Nut, Keps #8 - 32
7	00942.0000	2	Nut, Hex .50" - 20
8	02536.0000	2	Grommet .375" I.D.
9	26665.1000	1	Probe Kit (Includes items 10, 11 & 12)
10	00908.0000	1	Nut, Hex #8 - 32
11	20203.0100	1	Lockwasher, Internal Tooth #8
12	01501.0000	1	Washer, Flat .16" I.D. x .375" O.D.
13	26503.0000	1	Tube Assy, Overflow (Includes item 14)
14	00929.0001	1	Nut/Sleeve, Compression .375" Tube
15	29329.1000	1	Thermostat, Limit
16	03803.0000	1	Switch Assy, Liquid Level (Includes items 17, 18 & 19)
	00946.0000	1	Nut, Hex .125" FPT
17	03807.0000	1	Clip, Spring
18	- - - - - - - -	3	Washer, Adjusting (DO NOT USE IN THIS APPLICATION)
19	03633.0000	2	Gasket, Float Switch (Only 1 used in this application)
20	12552.0000	1	Overflow Cup
	00908.0000	2	Nut, Hex #8 - 32
21	12422.0000	2	Clamp, Hose .47"/.54" I.D.
22	- - - - - - - -	1	Tube, Silicone .312" I.D. x 17.00" (Order item 25)
23	26494.0000	1	Tube, 45° .375" O.D.
24	01570.0000	2	Wire Nut, 2 - 24 AWG
25	03236.1001	-	Tube, Silicone .312" I.D. x 36.00" — Not illustrated
	03236.1002	-	Tube, Silicone .312" I.D. x 120.00"
	03236.1003	-	Tube, Silicone .312" I.D. x 60.00"

STRAINER, SOLENOID, FILL VALVE AND LINES

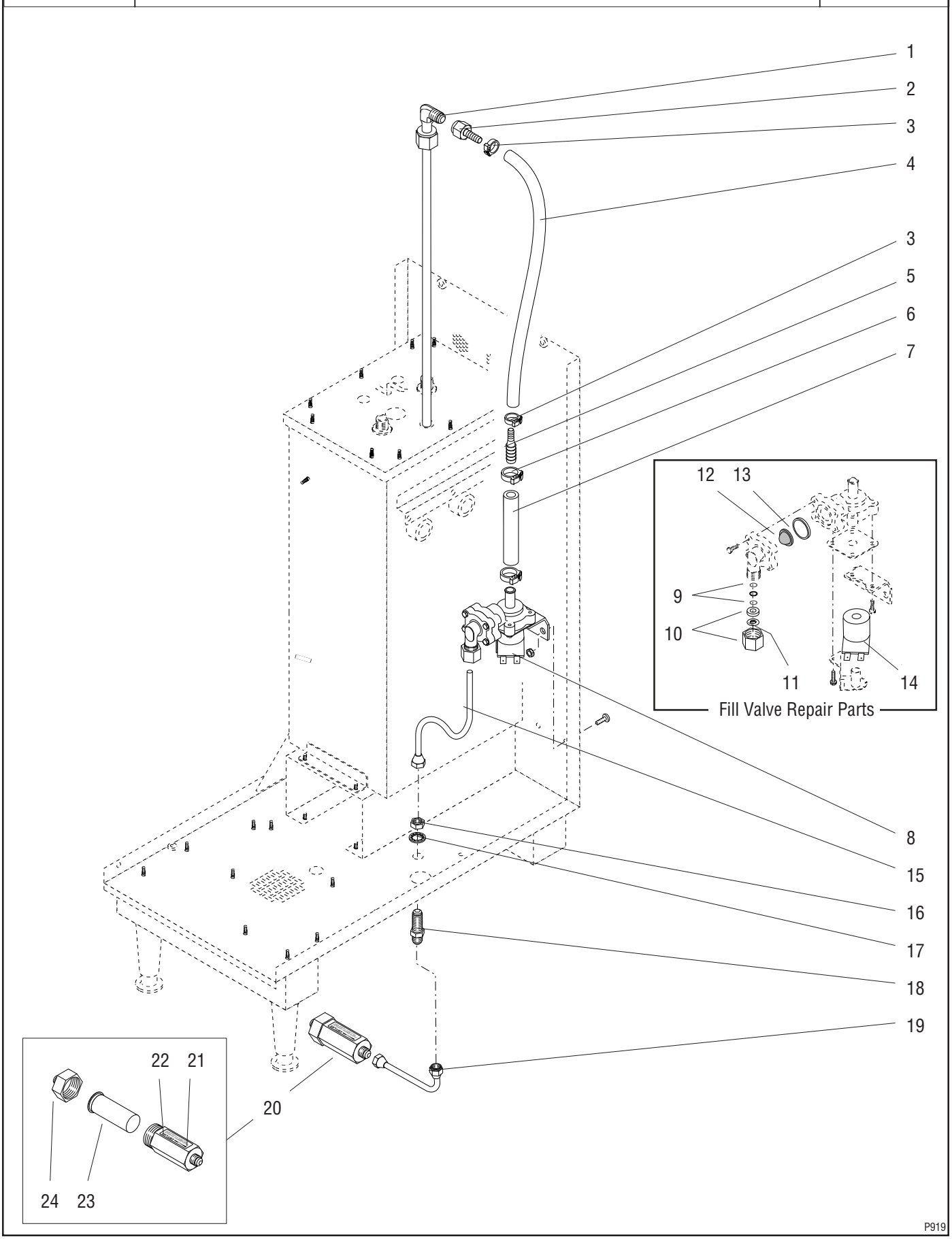

STRAINER, SOLENOID, FILL VALVE AND LINES

ITEM	PART NO.	QTY.	DESCRIPTION
1	20202.0100	1	Tube, Tank Fill
2	00425.0000	1	Fitting .25" Flare Nut x .25" Barb
3	12422.0000	2	Clamp, Hose .47"/.54" I.D.
4	- - - - - - - -	1	Tube, Silicone .25" I.D. x .50" O.D. x 13.0" (Order item 25)
5	26443.0000	1	Reducer Barb .375" x .25"
6	12422.0001	2	Clamp, Hose .59"/.66" I.D.
7	- - - - - - - -	1	Tube, Silicone .375" I.D. x .625" O.D. x 6.0" (Order item 26)
8	26135.0001	1	Valve, Solenoid 120V
	02331.0001	2	Screw, Truss Head #10 - 32
	00971.0000	2	Nut, Keps #10 - 32
9	26275.0000	2	O-Ring
10	- - - - - - - -	1	Nut/Spacer (Order item 27)
11	- - - - - - - -	1	Grab Ring (Order item 27)
12	25998.0000	1	Screen, Valve (Fill Valve Repair Parts)
13	25999.0000	1	Gasket, Valve Body (Fill Valve Repair Parts)
14	26278.0000	1	Coil Assy, 120V (Fill Valve Repair Parts)
15	26661.0000	1	Tube Assy, Water Inlet
16	00463.0000	1	Nut, Hex .438" - 20
17	01532.0000	1	Lockwasher, Internal Tooth .438"
18	00459.0000	1	Fitting, Bulkhead
19	21812.0010	1	Tube Assy
20	23820.1000	1	Water Strainer Assy (Includes item 21 thru 24)
21	- - - - - - - -	1	Body (Not available order item 20)
22	22267.0002	1	Decal, Strainer
23	23721.0000	1	Screen
24	22249.0000	1	End Cap
25	11707.1000	-	Tube, Silicone .25" I.D. x .50" O.D. x 12.0"
	11707.1001	-	Tube, Silicone .25" I.D. x .50" O.D. x 36.0"
	11707.1002	-	Tube, Silicone .25" I.D. x .50" O.D. x 120.0"
26	20976.1000	-	Tube, Silicone .375" I.D. x .625" O.D. x 12.0"
	20976.1001	-	Tube, Silicone .375" I.D. x .625" O.D. x 36.0"
	20976.1002	-	Tube, Silicone .375" I.D. x .625" O.D. x 120.0"
27	26131.0000	-	Kit, Nut/O-Ring (Includes items 9,10 & 11)

DISPENSE VALVE AND LINES

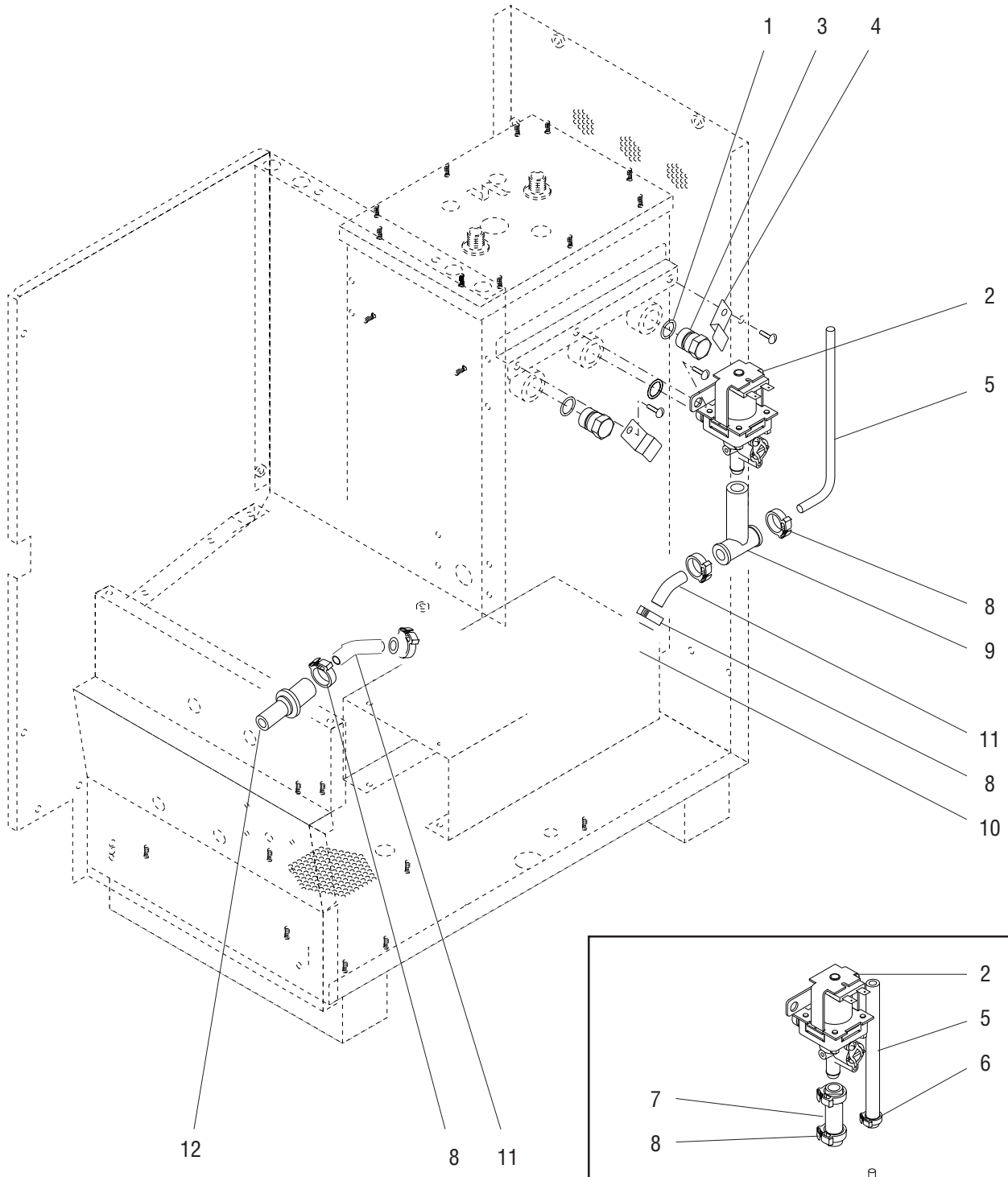

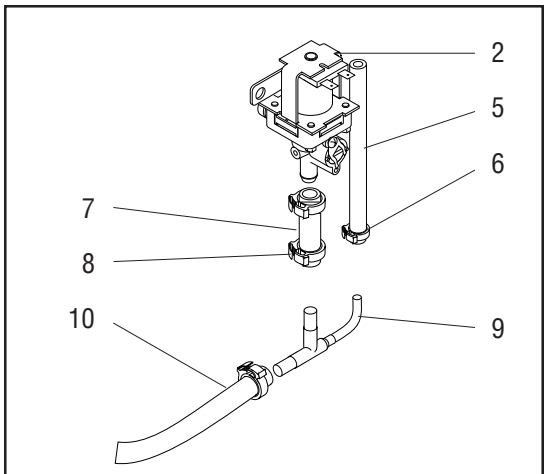

EARLY MODELS

P920

DISPENSE VALVE AND LINES

ITEM	PART NO.	QTY.	DESCRIPTION
1	24733.0011	3	O-Ring
2	26116.0000	1	Valve, Liquid Dispense
	02331.0000	1	Screw, Truss Head #10 - 32 x .375"
3	26369.0000	2	Plug, O-Ring
4	26395.0000	2	Retainer, Plug
	02331.0000	2	Screw, Truss Head #10 - 32 x .375"
5	- - - - - - - -	1	Tube, Vent Silicone .25" I.D. x .50" O.D. x 5.25" (Order item 13) (Early models)
	21810.0005	1	Tube, Vent .25" O.D. x 1.31" x 6.0" (Late models)
6	12422.0000	1	Clamp, Hose .47"/.54" I.D. (Early models only)
7	- - - - - - - -	1	Tube, Silicone .375" I.D. x .625" O.D. x 1.60" (Order item 14) (Early models only)
8	12422.0001	5	Clamp, Hose .59"/.66" I.D.
9	- - - - - - - -	1	Tee/Tube, Dispense valve (Early models) (Not available order item 15)
	26932.0000	1	Tee, Dispense valve (Late models)
10	- - - - - - - -	-	Tube, Silicone .375" I.D. x .625" O.D. x 13.375" (Order item 14)
11	26494.0000	2	Tube, 45°, .375" O.D. (1 less used on Early models)
12	25803.0000	1	Water Inlet, Mixing Chamber
13	11707.1000	-	Tube, Silicone .25" I.D. x .50" O.D. x 12.0"
	11707.1001	-	Tube, Silicone .25" I.D. x .50" O.D. x 36.0"
	11707.1002	-	Tube, Silicone .25" I.D. x .50" O.D. x 120.0"
14	20976.1000	-	Tube, Silicone .375" I.D. x .625" O.D. x 12.0"
	20976.1001	-	Tube, Silicone .375" I.D. x .625" O.D. x 36.0"
	20976.1002	-	Tube, Silicone .375" I.D. x .625" O.D. x 120.0"
15	26942.0000	-	Tee Replacement Kit, Dispense Valve (Converts first type Dispense Valve Tee to second type. Includes 2 of item 8 & 1 each of items 5, 9, & 11)

ELECTRICAL CONTROLS

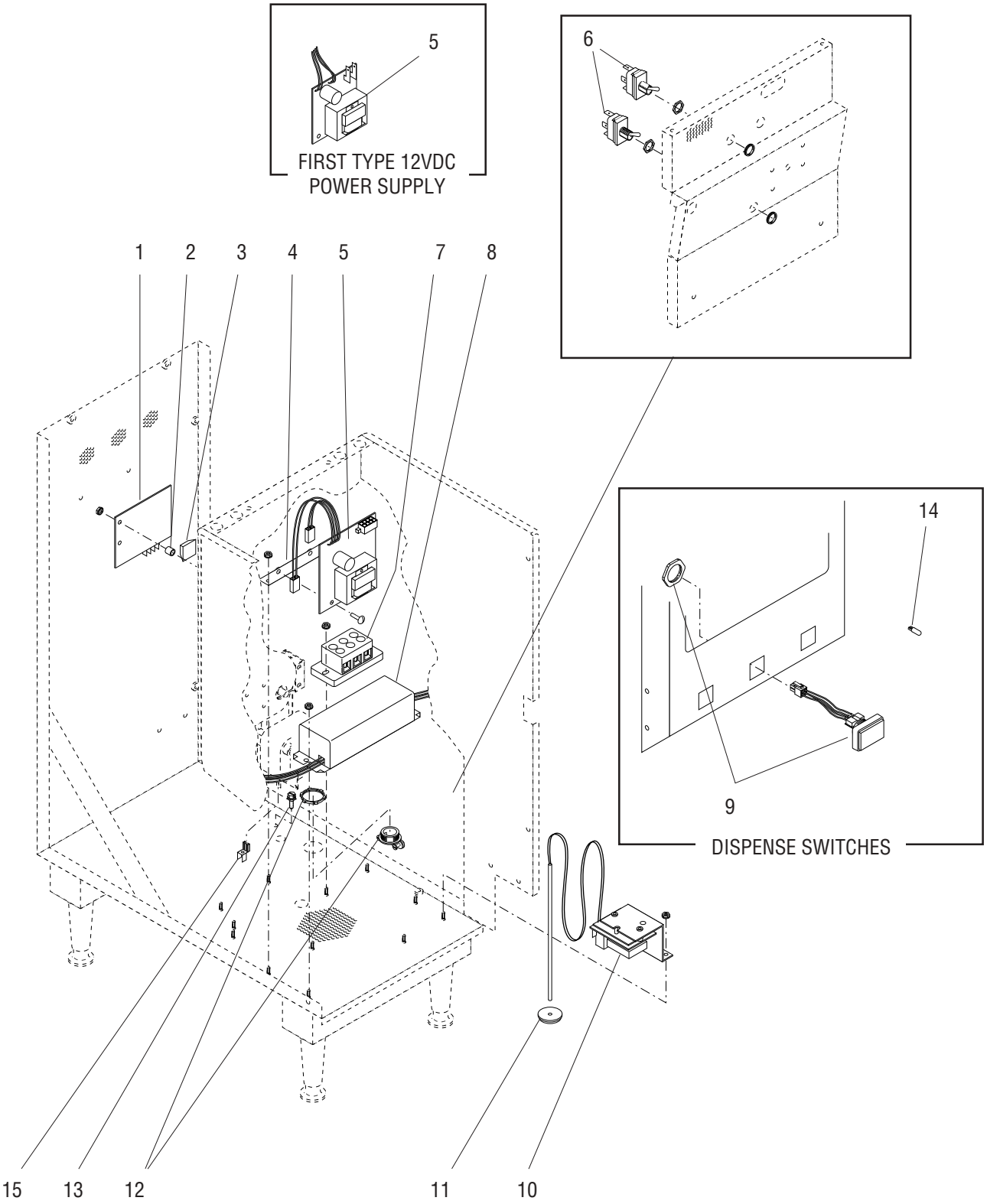

P921

ELECTRICAL CONTROLS

ITEM	PART NO.	QTY.	DESCRIPTION
1	07074.1000	1	Control Board, Level - 120V 5 SEC
	00970.0000	2	Nut, Keps #8 - 32
2	00450.0000	2	Spacer .219" I.D. x .34" LG
3	02547.0000	1	Foot, Rubber
4	26663.0000	1	Bracket, Power Supply Mounting
	00970.0000	2	Nut, Keps #8 - 32
5	- - - - - - - -	1	Circuit Board, Power Supply 12VDC (Early Models) (Not available order item 21)
	26677.0000	1	Circuit Board, Power Supply/Hopper Delay 12VDC (Late Models)
	01311.0000	2	Screw, Truss Head #8 - 32 x .25"
6	05761.0000	2	Switch, Toggle ON/ON SPDT (Includes mounting nuts)
7	07038.0000	1	Terminal Block, 3 Pole - RED/WHT/BLK
	00970.0000	2	Nut, Keps #8 - 32
8	26538.0000	1	Ballast, 120V-60HZ W/Terminals
	00970.0000	2	Nut, Keps #8 - 32
9	26559.0000	1	Dispense Switch Assembly, Illuminated W/Terminals (Includes mounting nut)
10	26527.1002	1	Thermostat/Bracket Assembly 120V
	00970.0000	2	Nut, Keps #8 - 32
11	12570.0000	1	Grommet
12	01685.0000	1	Connector, Cord
13	01309.0000	1	Ground Screw W/Terminal Washer #10 - 32 x .50"
14	26405.0000	-	Lamp, LED (Use as required)
15	04502.0000	1	Connector, Terminal
16	01713.1000	1	Cord Assembly, Power (120V 15Amp Models only)
	23799.0001	1	Cord Assembly, Power (120V 20Amp Models only)
17	26565.0000	1	Wiring Harness, Control - 120V
	26565.0001	1	Wiring Harness, Control - 120/240V
18	- - - - - - - -	1	Wiring Harness, Door Interconnect
19	- - - - - - - -	1	Wiring Harness, Door
20	26666.0000	1	Wiring Harness, Hopper Delay (Late Models)
21	26765.0000	-	Kit, Circuit Board (Converts First Type 12VDC Power Supply to Second Type 12VDC Power Supply/Hopper Delay)

See Door, Lamps and Panels

Not Illustrated

NUMERICAL INDEX

PART NO.	PAGE NO.
00425.0000	15
00450.0000	19
00459.0001	15
00463.0000	15
00619.0010	7
00656.0000	5
00831.0000	5
00906.0000	9
00908.0000	13
00929.0001	13
00942.0000	13
00943.0000	13
00946.0000	13
00970.0000	11,13,19
00971.0000	15
00991.0002	5
01309.0000	19
01311.0000	5,7,9,19
01311.0001	5,9,11
01311.0003	5
01384.0000	11
01501.0000	13
01520.0000	9
01522.0000	9
01532.0000	15
01570.0000	13
01685.0000	19
01713.1000	19
02308.0000	5,7
02324.0000	11
02328.0003	11
02331.0000	5,7,17
02331.0001	5,15
02332.0002	13
02361.0000	7
02536.0000	13
02547.0000	19
03236.1001	13
03236.1002	13
03236.1003	13
03633.0000	13
03803.0000	13
03807.0000	13
03996.0000	5
04502.0000	19
05761.0000	19
05920.0000	7
07038.0000	19
07074.1000	19
11646.0000	7
11707.1000	15,17
11707.1001	15,17
11707.1002	15,17
12368.0001	5
12422.0000	13,15,17
12422.0001	15,17
12552.0000	13
12570.0000	19
13255.0003	5
20201.0750	13
20201.4150	13
20201.4151	13
20202.0100	15
20203.0100	13
20621.0000	5
20960.0000	9
20976.1000	15,17
20976.1001	15,17
20976.1002	15,17
21355.0000	9
21357.0000	9
21358.0000	9
21745.0000	9
21746.0000	9
21747.0000	9
21810.0005	17
21812.0010	15
22249.0000	15
22267.0002	15
22978.0000	13
23199.0002	13
23721.0000	15
23799.0001	19
23820.1000	15
24331.0000	11
24547.0001	13
24733.0010	11
24733.0011	17
25414.0000	5
25414.0001	5
25732.0000	11
25733.0000	11
25734.0000	11
25736.0000	11
25744.0000	9
25794.0000	9
25796.0000	5
25796.0001	5
25803.0000	17
25887.0000	5
25887.0001	5
25891.0000	9
25892.0000	9
25894.1000	9
25895.0000	9
25897.0000	7
25898.0000	7
25901.0000	5
25901.0001	5
25902.0000	11
25903.0000	9
25904.0000	9
25998.0000	15
25999.0000	15
26112.0000	9
26116.0000	17
26131.000	15
26135.0001	15
26232.0000	5
26232.0001	5
26233.0001	5
26238.0001	9
26239.0000	7
26244.1000	11
26247.0000	9
26275.0000	15
26278.0000	15
26348.0000	7
26350.0000	7
26353.0000	7
26354.0000	7
26355.0000	11
26356.0000	11
26359.0000	11
26369.0000	17
26392.0000	11
26393.1000	11
26395.0000	17
26401.0000	9
26405.0000	19
26443.0000	15
26444.0000	7
26494.0000	13,17
26503.0000	13
26504.0000	5
26506.0000	7
26507.0000	7
26509.0000	5
26520.0000	7
26520.0001	7
26521.0001	7
26523.0000	5
26524.0000	5
26525.0001	7
26527.1002	19
26528.0000	5
26532.0001	5
26537.0000	7
26538.0000	19
26539.0000	7
26559.0000	19
26565.0000	19
26565.0001	19
26576.0001	5
26636.0000	13
26661.0000	15
26663.0000	19
26665.1000	13
26666.0000	19
26667.0000	5
26677.0000	19
26680.0000	9
26702.0001	5
26751.0000	5
26752.0000	7
26752.0001	7
26754.0000	9
26756.0000	7
26757.0000	5
26765.0000	19
26886.1000	5
26892.0000	7
26926.0000	11
26932.0000	17
26940.0001	9
26942.0000	17
29329.1000	15
34179.0000	11