BUNN® INTERNATIONAL

ITEM#

PROJECT

DATE

Dual® Brewer with Portable Server

Dual
with two 1.5GPR's
Dimensions: 29.3" H x 18" W x 19.3" D
(74.4cm H x 45.7cm W x 49cm D)

Features

Dual Coffee Brewer

- Brews ½, 1, or 1½ gallon (1.9, 3.8 and 5.7 litre) batches.
- Adjustable bypass ensures perfect coffee regardless of batch size.
- Hot water faucet does not affect brew level.
- Electronic timer ensures fast set up and accurate brew levels.
- Electronic grinder interface instructs grinder on exact amount of coffee for selected brew batch size.
- 1.5GPR portable server (included) has a patented Safety-Fresh® brew-through lid with vapor seal and spill protection.
- SplashGard® funnel deflects hot liquids away from the hand.
- Brew capacity varies by model. See back for details.

For current specification sheets and other information, go to *www.bunn.com*.

International models may vary in appearance.

Related Products

Easy Clear® EQHP-25
Product No. : 39000.0005

Easy Clear® EQHP-25L
Product No. : 39000.0002

Single/Dual Filter Pack
Product No. : 20138.0000

Dual Drip Tray Kit
Product No.: 20213.0101

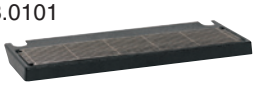

1.5GPR
Product No. : 20950.0004

RWS1A
Product No. : 12203.0011
(230 volt)

RWS1 Drip Tray
Product No. : 20213.0103

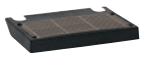

Dimensions & Specifications

Model	Product #	Volts	Amps	Tank Heater Watts	Total Watts	Brewing Capacity	Shipping Weight	Cord Attached	Agency
Dual	20900.0055	230	27.4	2 @ 3031	6300	17.3 gal./hr.	97 lbs. *(65.4 L./hr.)*	No *(44 kg)*	CE

All include Safety-Fresh® server with additional orange faucet handle and decal for decaf service (20950.0004).
Brewing capacity: *based upon incoming water temp of 60ºF (15.5ºC) (140ºF (60ºC) rise) per 1/2 gallon (1.89 litre) brew time of 4 minutes.*

Electrical: Model requires 2-wires plus ground service rated 220-240V, single phase, 50/60 Hz.

Plumbing: 20-90 psi (138-621 kPa). Supplied with ¼" male flare fittings. Tank capacity: 8.4 gallons (*31.8 L*)

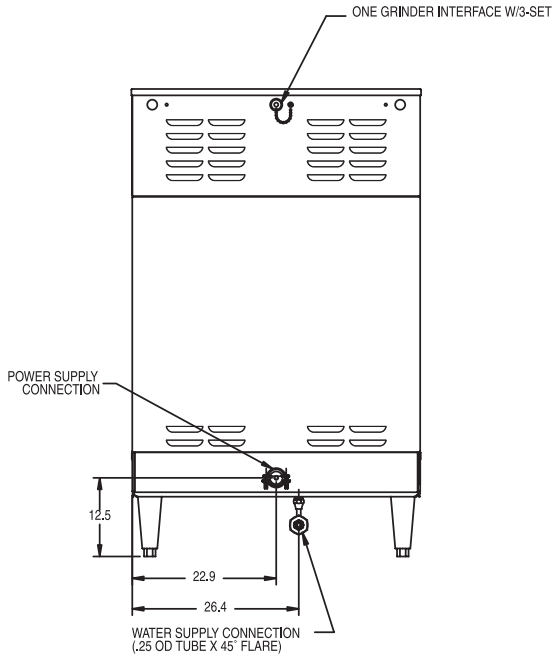

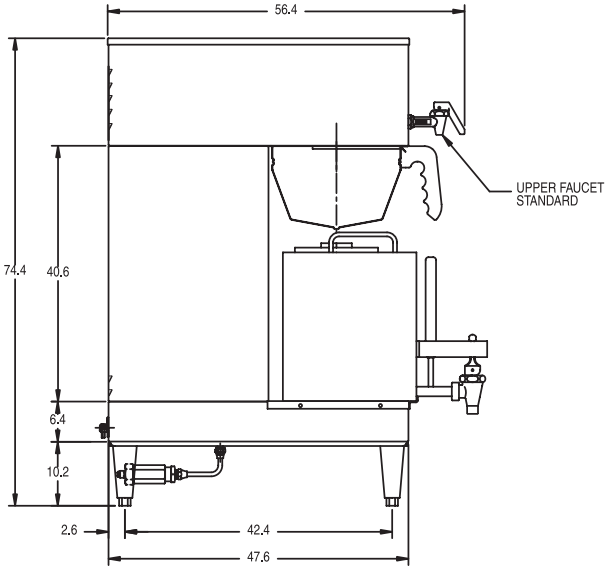

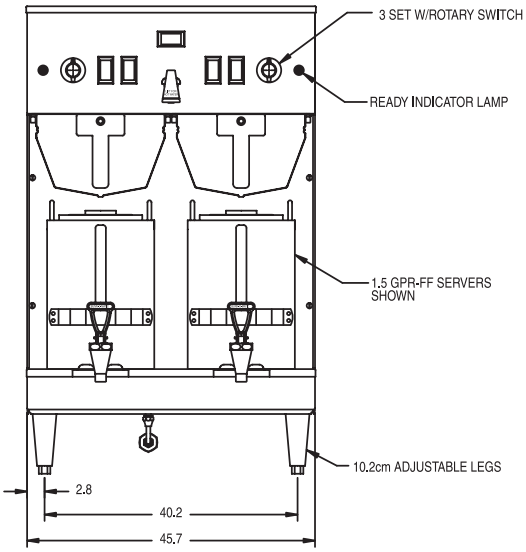

Bunn-O-Matic® Corporation - 1400 Stevenson Drive Springfield, Illinois 62703 • USA • +1-217-529-6601 • Fax +1-217-529-2827 • www.bunn.com

BUNN® practices continuous product research and improvement. We reserve the right to change specifications and product design without notice. Such revisions do not entitle the buyer to corresponding changes, improvements, additions or replacements for previously purchased equipment.

All dimensions shown in centimeters.

9/08 © Bunn-O-Matic Corporation