GARLAND®

680 SENTRY SERIES
Electric Restaurant Ranges

S684 - SS684 - SU684 - S686 - SS686 - SU686
S684RC - SS684RC - SU684RC - S686RC - SS686RC - SU686RC
SERC - SUERC - SER-680 - SUER-680

PARTS LIST

Toll Free Phone, (US & Canada): (800) 427-6668

Toll Free Fax, (US & Canada): (800) 361-7745

http://www.garland-group.com

FORM # S680 Parts (Rev 7)

GARLAND®

680 SENTRY SERIES
Electric Restaurant Ranges

S684 - SS684 - SU684 - S686 - SS686 - SU686
S684RC - SS684RC - SU684RC - S686RC - SS686RC - SU686RC
SERC - SUERC - SER-680 - SUER-680

Contents:

Electric Restaurant Range Oven Section,
Models S, SS & SU684, 686 ..... Page 4

Electric Restaurant Range Convection Oven Section,
Models S, SS & SU684RC, 686RC ..... Page 8

Electric Restaurant Range Top Section,
Models S, SS & SU684, SU684RC, 686, 686RC ..... Page 12

Electric Salamander Broiler,
Models SERC, SUERC, SER-680, SUER-680 ..... Page 16

Knob Replacement Guide ..... Page 20

Circuit Breaker Bulletin B-92-2002 ..... Page 21

Revision History ..... Page 26

GARLAND®

ELECTRIC RESTAURANT RANGE OVEN
MODEL S,SS & SU684, 686

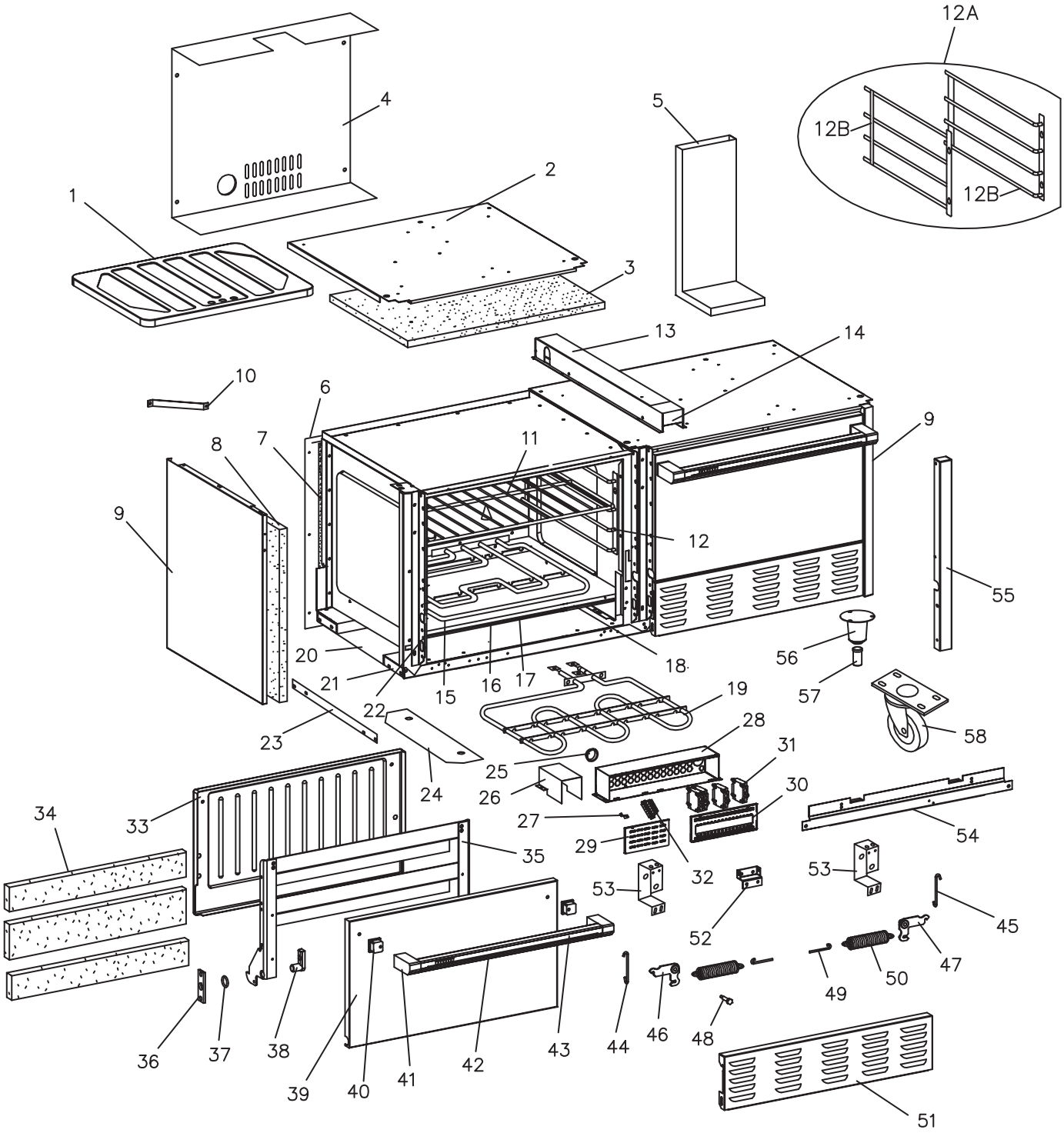

SK 3638

GARLAND PARTS IDENTIFICATION

Electric Restaurants Range Oven Section

ITEM	PART #	DESCRIPTION	MODEL/QUANTITY			
			S686	S684	SS/SU686	SS/SU684
1	1438499	Oven Bottom Assembly	1	2	1	2
2	1080918	Burner Box Bottom Assy.	1		1	
	1392200	Burner Box Bottom		2		2
3	1472300	Oven Top Insulation	1	2	1	2
4	2684900	Wall Shield	1		1	
	2684902	Wall Shield		1		1
5	G01091-01-6	Flue Body Assembly	1	2	1	2
6	2628800	Main Back 36”	1		1	
	2566301	Main Back 60”		1		1
7	1472201	Upper Back Insulation	1	2	1	2
	1472202	Lower Back Insulation	1	2	1	2
8	1472200	Body Side Insulation	2	2	2	2
9	1081104	Body Side R/H	1		1	
	1081109	Body Side L/H	1		1	
	1081113	Body Side R/H		1		1
	1081108	Body Side L/H		1		1
10	G6480-1-7	Body Side Rear Brace	2	2	2	2
11	2301200	Oven Rack				
12	2297700	Side Racks R/H NLA	1	2	1	2
	2297701	Side Racks L/H NLA	1	2	1	2
IMPORTANT NOTES FOR THE OVEN RACK GUIDE Both 3 position rack guides will have to be replaced, when changing to the new 4 position rack guide. Order Part # 4519545 Oven Rack Guide Kit which includes both racks (Rt & Lt). Mounting method is the same.						
12A	451945	Oven Rack Slide Assy LT/RT Kit (2 Racks Included) From Serial # 0410100109744 Implementation Date: Nov. 5/04	1	2	1	2
12B	4518127	Oven Rack Slide Assy LT/RT From Serial # 01410100109744 Implementation Date Nov. 5/04	1 Each Side			
13	2611900	Wire Cover		1		1
14	2611800	Wire Channel		1		1
15	G01042-1	Oven Element Lower Assy. 208V	1	2	1	2
	G01042-3	Oven Element Lower Assy. 230V	1	2	1	2
	G01042-2	Oven Element Lower Assy. 240V	1	2	1	2
16	2684300	Oven Bottom Lining	1	2	1	2
17	2684200	Insulating Bottom	1	2	1	2
18	1472300	Oven Bottom Insulation	1	2	1	2
19	G01043-1	Oven Element Upper Assy. 208V	1	2	1	2
	G01043-3	Oven Element Upper Assy. 230V	1	2	1	2
	G01043-2	Oven Element Upper Assy. 240V	1	2	1	2
20	2610001	Main Bottom	1		1	
	2610000	Main Bottom		2		2
21	1361810	Main Bottom Support Channel	2		2	
	1361812	Main Bottom Support Channel		2		2
22	1730397	Front Frame Assy.	1		1	
	1730297	Front Frame Assy.		2		2
23	1388800	Lifting Angle	2	2	2	2
24	G2207-1-6	Oven Bottom Filler	2	4	2	4

* NOT ILLUSTRATED

RECOMMENDED STOCK PARTS

GARLAND PARTS IDENTIFICATION

Electric Restaurants Range Oven Section

ITEM	PART #	DESCRIPTION	MODEL/QUANTITY			
			S686	S684	SS/SU686	SS/SU684
25	G011487-1	Heyco Bushing	1	1	1	1
26	2686000	Wireway	1	1	1	1
27	G01499-1	Ground Terminal	1	1	1	1
28	2688900	Electrical Box	1	1	1	1
29	2689000	Terminal Cover	1	1	1	1
30	2689100	Circuit Breaker Cover	1	1	1	1
31	2687000	Circuit Breaker 1 Pole 20 A	Specify Model See Bulletin -Page 21-B-92-2002			
	2687001	Circuit Breaker 1 Pole 30 A				
	2687002	Circuit Breaker 1 Pole 40 A				
	2688800	Circuit Breaker 2 Pole 20 A				
	2688801	Circuit Breaker 2 Pole 30 A				
	2688802	Circuit Breaker 2 Pole 40 A				
32	2694800	Terminal Block Assy. (Export)	1		1	
	1193900	Terminal Block				
33	1439796	Oven Door Lining	1	2	1	2
34	1472301	Oven Door Insulation	1	2	1	2
	1472302	Oven Door Insulation	1	2	1	2
	1472303	Oven Door Insulation	1	2	1	2
35	G03984-03-8	Oven Door Insert Assy.	1	2	1	2
36	1083001	Trunion Support	2	4	2	4
37	1082700	Harness Ring	2	4	2	4
38	1082500	Oven Door Trunion	2	4	2	4
39	2580100	Oven Door Panel	1	2	1	2
40	2377300	Handle End Insert	2	4	2	4
41	2194900	Handle End R/H	1	2	1	2
	2194901	Handle End L/H	1	2	1	2
42	2193100	Oven Door Handle	1	2	1	2
43	2690400	Oven Door Handle Overlay	1	2	1	2
44	1082803	Oven Door Hinge Link L/H	1	2	1	2
45	1082802	Oven Door Hinge Link R/H	1	2	1	2
46	1082198	Bell Crank Assy. L/H	1	2	1	2
47	1082199	Bell Crank Assy. R/H	1	2	1	2
48	1082200	Bell Crank Bolt	2	4	2	4
49	9004701	Oven Door Spring Hook	2	4	2	4
50	1005800	Door Spring	2	4	2	4
51	2376702	Kick Panel	1	2	1	2
52	2301300	Door Spring Support	1	2	1	2
53	1386100	Bell Crank Support	2	4	2	4
54	1528800	Front Frame Lower Support	1	2	1	2
55	1081516	Centre Column		1		1
56	1027600	6” Leg Retainer	4	4	4	4
	2093800	4” Leg Retainer	4	4	4	4
57	1150502	Bullet Leg	4	4	4	4
58	1027801	Swivel Caster with Brake	2	2	2	2
	1027800	Swivel Caster without Brake	2	2	2	2

* NOT ILLUSTRATED

RECOMMENDED STOCK PARTS

NOTES

GARLAND®

ELECTRIC RESTAURANT RANGE
CONVECTION OVEN
MODEL S,SS & SU684RC, 686RC

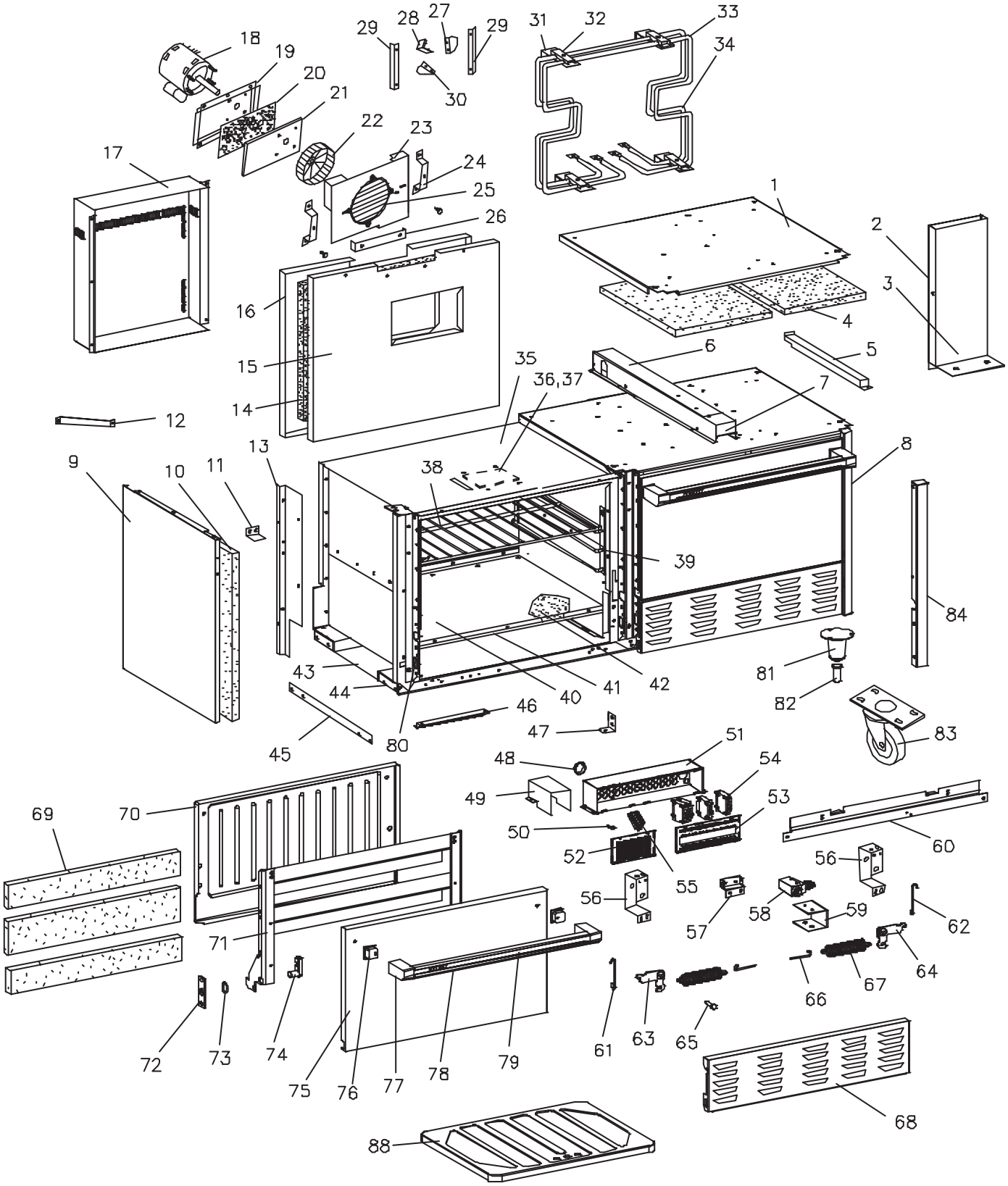

SK3638RC

GARLAND PARTS IDENTIFICATION

Electric Restaurants Range Convection Oven Section

ITEM	PART #	DESCRIPTION	MODEL/QUANTITY		
			S/SS/ SU686RC	S/SS/ SU684RC	SS/ SU684RC2
1	1080918	Burner Box Bottom Assy.	1		
	1392200	Burner Box Bottom		1	
	1528401	Burner Box Bottom		1	2
2	1527702	Oven Flue Riser Back	1	2	2
3	1527700	Oven Flue Riser Front	1	2	2
4	1309022	Oven Top Insulation - RC	1	1	2
	1472300	Oven Top Insulation - Std.		1	
5	1522300	Moisture Vent Channel	1		2
6	2611900	Wire Cover	1		2
7	2611800	Wire Channel	1		2
8	1081104	Body Side R/H	1		
	1081113	Body Side R/H		1	1
9	1081109	Body Side L/H	1		
	1081108	Body Side L/H		1	1
10	1309021	Oven Side Insulation	2	4	4
11	1411700	Insulation Support	2	2	4
12	1081300	Side Rear Brace	2	2	2
13	1411300	Casing Support R/H	1	2	2
	1411301	Casing Support L/H	1	2	2
14	1472200	Rear Insulation	1	2	2
	1472201	Rear Insulation	1	2	2
15	2600599	Main Back Insulation Pan Assy.	1	1	2
16	2600400	Main Back	1	1	2
17	3005100	Wall Shield	1		
	2631400	Wall Shield Left		1	1
	2684800	Wall Shield Right		1	1
	2631300	Wall Shield - Std. Oven		1	
18	2485800	Motor	1	1	2
19	2396600	Motor Mount Pocket	1	1	2
20	1669100	Motor Pocket Insulation	1	1	2
21	2396700	Motor Mount Plate	1	1	2
22	G02952-01P	Blower Wheel	1	1	2
23	2600799	Air Baffle	1	1	2
24	1361299	Air Baffle Support	2	2	4
25	2520100	Fan Protector Screen	1	1	2
26	1527900	Insulation Retainer	1	1	2
27	1522102	Air Vane Center Right	1	1	2
28	1522101	Air Vane Center Left	1	1	2
29	1522200	Air Vane Angle	1	1	2
30	1522100	Air Vane Bottom Left	1	1	2
31	1521300	Element Bracket	4	4	8
32	1521400	Element Clamp	4	4	8
33	9007101	Center RC Element 208V	1	1	2
	9007113	Center RC Element 230V	1	1	2
	9007104	Center RC Element 240V	1	1	2
34	9007100	Rear RC Element 208V	1	1	2
	9007112	Rear RC Element 230V	1	1	2
	9007103	Rear RC Element 240V	1	1	2
35	1411400	Oven Casing Top	1	1	2

* NOT SHOWN

RECOMMENDED STOCK PARTS

GARLAND PARTS IDENTIFICATION

Electric Restaurants Range Convection Oven Section

ITEM	PART #	DESCRIPTION	MODEL/QUANTITY		
			S/SS/ SU686RC	S/SS/ SU684RC	SS/ SU684RC2
36	1412300	Vent Slide	1	1	2
37	1412400	Vent Slide Housing	1	1	2
38	2301200	Oven Rack	3	4	6
39	2297700	Oven Rack Slide Assy. R/H		1	
	2297701	Oven Rack Slide Assy. L/H		1	
	1311100	RC Oven Rack Slide Assy. L/H	1	1	2
	1311101	RC Oven Rack Slide Assy. R/H	1	1	2
40	1411500	Oven Casing Bottom	1	1	2
41	1521500	Bottom Insulation Pan	1	1	2
42	1309022	Oven Bottom Insulation - RC	1	1	2
	1472300	Oven Bottom Insulation - Std.		1	
43	2610101	Main Bottom	1		
	2610100	Main Bottom		1	2
	2610000	Main Bottom		1	
44	1361810	Main Bottom Support Channel	2		
	1361812	Main Bottom Support Channel		2	2
45	1388800	Lifting Angle	2	2	2
46	G02905-01-8E	Capillary Tube Guard	1	2	2
47	1356600	Rack Guide Clip	4	4	8
48	G01487-1	Heyco Bushing	1	1	1
49	2627900	Wireway	1	1	1
50	G01499-1	Ground Terminal	1	1	1
51	2688900	Electrical Box	1	1	1
52	2689000	Terminal Cover	1	1	1
53	2689100	Circuit Breaker Cover	1	1	1
54	2688700	Circuit Breaker 1 Pole 20A	Specify Model See Bulletin -Page 21-B-92-200		
	2688701	Circuit Breaker 1 Pole 30A			
	2688702	Circuit Breaker 1 Pole 40A			
	2688800	Circuit Breaker 2 Pole 20A			
	2688801	Circuit Breaker 2 Pole 30A			
	2688802	Circuit Breaker 2 Pole 40A			
55	2694800	Terminal Block Assy.(Export)	1	1	1
	1193900	Terminal Block (Domestic)			
56	1386100	Bell Crank Support	2	4	4
57	2301300	Door Spring Support	1	2	2
58	2398600	Microswitch	1	1	2
	2398700	Microswitch Terminal Cover	1	1	2
59	2689600	Microswitch Mounting Brkt.	1	1	2
60	1528800	Front Frame Lower Support	1	2	2
61	1082803	Oven Door Hinge Link L/H	1	2	2
62	1082802	Oven Door Hinge Link R/H	1	2	2
63	1082198	Bell Crank Assy. L/H	1	2	2
64	1082199	Bell Crank Assy. R/H	1	2	2
65	1082200	Bell Crank Bolt	2	4	4
66	9004701	Oven Door Spring Hook	2	4	4
67	1005800	Door Spring	2	4	4
68	2376702	Kick Panel	1	2	2
69	1472301	Oven Door Insulation	1	2	2
	1472302	Oven Door Insulation	1	2	2
	1472303	Oven Door Insulation	1	2	2

* NOT SHOWN

RECOMMENDED STOCK PARTS

GARLAND PARTS IDENTIFICATION

Electric Restaurants Range Convection Oven Section

ITEM	PART #	DESCRIPTION	MODEL/QUANTITY		
			S/SS/ SU686RC	S/SS/ SU684RC	SS/ SU684RC2
70	1439796	Oven Door Lining	1	2	2
71	G03984-03-8	Oven Door Insert Assy.	1	2	2
72	1083001	Trunion Support	2	4	4
73	1082700	Harness Ring	2	4	4
74	1082500	Oven Door Trunion	2	4	4
75	2580100	Oven Door Panel	1	2	2
76	2377300	Handle End Insert	2	4	4
77	2194900	Handle End R/H	1	2	2
	2194901	Handle End L/H	1	2	2
78	2193100	Oven Door Handle	1	2	2
79	2690400	Oven Door Handle Overlay	1	2	2
80	1730397	Front Frame Assy.	1		
	1730297	Front Frame Assy.		2	2
81	1027600	6” Leg Retainer	4	4	4
	2093800	4” Leg Retainer	4	4	4
82	1150502	Bullet Leg	4	4	4
83	1027801	Swivel Caster with Brake	2	2	2
	1027800	Swivel Caster without Brake	2	2	2
84	1081516	Center Column		1	1

* NOT SHOWN

RECOMMENDED STOCK PARTS

GARLAND®

ELECTRIC RESTAURANT RANGE
TOP SECTION MODELS:
S,SS,SU684, 684RC & 686, 686RC

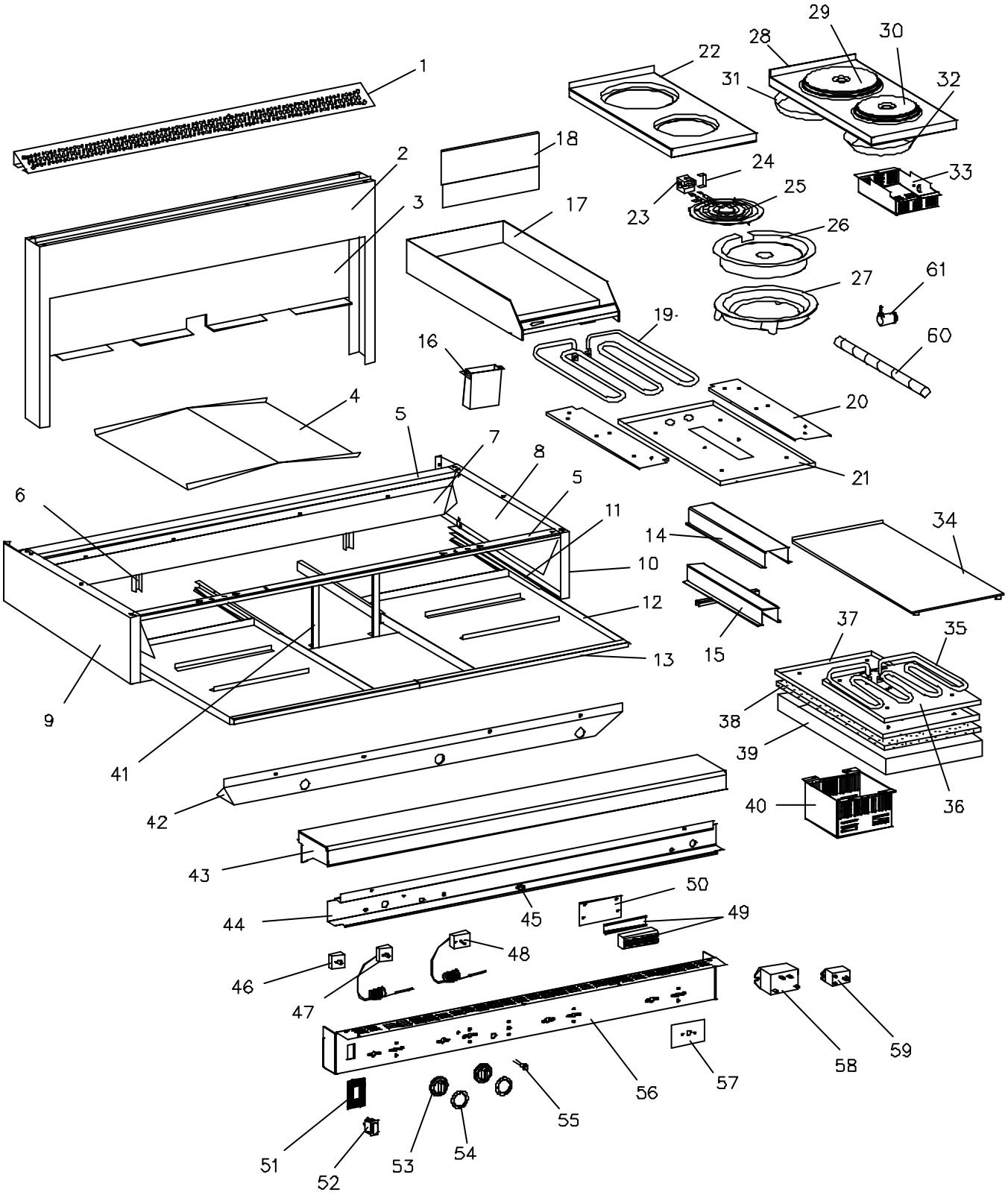

SK3639

GARLAND PARTS IDENTIFICATION

Electric Restaurants Range Top Section

ITEM	PART #	DESCRIPTION	MODEL/QUANTITY (S/SS/SU) 686(RC)	MODEL/QUANTITY (S/SS/SU) 684(RC)
1	2374301	Backguard Top 36”	1	
	2374303	Backguard Top 60”		1
2	2374101	Backguard Front	1	
	2374198	Backguard Front Assembly		1
3	2685800	Backguard Back Std	1	
	2685801	Backguard Back S/S	1	
	2685802	Backguard Back Std		1
	2685803	Backguard BackS/S		1
4	2692000	Centre Grease Diverter		1
5	1085000	Burner Box Front Channel 36”	2	
	1085100	Burner Box Front Channel 60”		2
6	1414600	Burner Box Back Support	1	2
7	2610800	Rear Heat Baffle	1	
	2610401	Rear Heat Baffle		1
8	2610600	Side Baffle L/h	1	1
	2610601	Side Baffle R/h	1	1
9	2589200	Burner Box Side L/h	1	1
10	2589201	Burner Box Side R/h	1	1
11	G1882-1-7	Drip Tray Slide	4	4
12	2684099	Drip Tray Assembly Large	1	2
	2686700	Drip Tray Small	1	
13	2686400	Drip Tray Handle Large	1	
	2686500	Drip Tray Handle Small	1	
	2602100	Drip Tray Handle		2
14	G01849-1-6	Bulb Channel	1 per 12” Grid	1 per 12” Grid
15	G01851-01-6	Bulb Clamp Assy.	1 per 12” Grid	1 per 12” Grid
16	3001799	Grease Chute Assembly	1	1
17	4518244	Griddle Assy 12” R/h	1	1
	4518245	Griddle Assy 12” L/h	1	1
	4518246	Griddle Assy 24”	1	1
	4518247	Griddle Assy 36”	1	1
18	1281999	Griddle Backsplash 12”	Specify Model	Specify Model
	1281998	Griddle Backsplash 24”	Specify Model	Specify Model
	1281997	Griddle Backsplash 36”	Specify Model	Specify Model
19	G01816-2	Element 240V, 3350W	1 per 12” Grid	1 per 12” Grid
	G01816-4	Element 240V, 3350W	1 per 12” Grid	1 per 12” Grid
20	G01884-1-6	Element Clamp	2 per 12” Grid	2 per 12” Grid
21	G03261-1-6	Element Cover	1 per 12” Grid	1 per 12” Grid
22	2611400	Insert Top Assy. 2 Hole - Tubular El.	Specify Model	Specify Model
	2611499	Insert Top Assy. 4 Hole - Tubular El.		
	2611498	Insert Top Assy. 6 Hole - Tubular El.		
	2611497	Insert Top Assy. 8 Hole - Tubular El.		
	2611496	Insert Top Assy. 10 Hole -Tubular El.		
23	2195800	Split Terminal Block		
24	2627700	Spring Clip		
25	2195000	Tubular Element 8” 208V		
	2195001	Tubular Element 8” 220-240V		
	2195100	Tubular Element 6” 1/2 208V		
	2195101	Tubular Element 6” 1/2 220-240V		

* NOT ILLUSTRATED

RECOMMENDED STOCK PARTS

GARLAND PARTS IDENTIFICATION

Electric Restaurants Range Top Section

ITEM	PART #	DESCRIPTION	MODEL/QUANTITY (S/SS/SU) 686(RC)	MODEL/QUANTITY (S/SS/SU) 684(RC)
26	2195200	Reflector Pan 6 1/2”	Specify Model	Specify Mode
	2195300	Reflector Pan 8”		
27	2602499	Ring Assy. 6 1/2”		
	2602399	Ring Assy. 8”		
28	2611300	Insert Top Assy. 2 Hole - Sealed El.		
	2611399	Insert Top Assy. 4 Hole - Sealed El.		
	2611398	Insert Top Assy. 6 Hole - Sealed El.		
	2611397	Insert Top Assy. 8 Hole - Sealed El.		
	2611396	Insert Top Assy. 10 Hole - Sealed El.		
29	2147100	Sealed Element Large 208V		
	2147101	Sealed Element Large 230V		
	2147102	Sealed Element Large 240V		
30	2590200	Sealed Element Small 208V		
	2590201	Sealed Element Small 230V		
	2590202	Sealed Element Small 240V		
31	2147200	Screening Sheet Large		
32	2147201	Screening Sheet Small		
33	2685500	Terminal Cover		
34	2596599	Hot Top Assy.		
35	G03237-1	Hot Top Element 208V		
	G03237-3	Hot Top Element 230V		
	G03237-2	Hot Top Element 240V		
36	2596900	Element Clamp		
37	2596800	Element Baffle		
38	1309079	Insulation		
39	2596700	Element Cover		
40	2611100	Terminal Box		
41	2684600	Channel Support		2
42	2610799	Front Heat Baffle 60”		1
	2610999	Front Heat Baffle 36”	1	
43	2608200	Front Rail 60”		1
	2608300	Front Rail 36”	1	
44	2611600	Switch Guard 60”		1
	2611200	Switch Guard 36”	1	
45	G01487-2	Heyco Bushing		1
46	2146900	Six Heat Switch	Specify Model	Specify Model
	Go3185-2	Infinite Switch	Specify Model	Specify Model
47	G0893-01	Griddle Thermostat		
48	G0894-01	Oven Thermostat	1	1
49	2694601	Terminal Block 8 Pole	1 (Std. Only)	1
	2694600	Terminal Block 11 Pole	1 (RC Only)	1
50	2611700	Terminal Block Mounting Plate	1	2
51	2685400	Overlay - RC Switch	Specify Model	Specify Model
52	1729100	RC Switch		
53	2138700	Knob NLA - See Page 20		

* NOT ILLUSTRATED

RECOMMENDED STOCK PARTS

GARLAND PARTS IDENTIFICATION

Electric Restaurants Range Top Section

ITEM	PART #	DESCRIPTION	MODEL/QUANTITY	
			(S/SS/SU) 686(RC)	(S/SS/SU) 684(RC)
54	2685900	Dial Insert Oven °F	Specify Model	Specify Mode
	2685901	Dial Insert Oven °C		
	2139100	Dial Insert Sealed Elements		
	2139000	Dial Insert Tubular El., Hot Top		
	2138800	Dial Insert Griddle °F		
	2138801	Dial Insert Griddle °C		
55	G01296-2	Pilot Light - Amber		
56	2608499	Switch Panel 60”		
	2608498	Switch Panel 60” RC		
	2608497	Switch Panel 60” RC2		
	2608599	Switch panel 36”		
	2608598	Switch Panel 36” RC		
57	2685100	Overlay - HT, SE, TE		
	2685200	Overlay - Oven		
	2685300	Overlay - Griddle		
58	2487000	Relay 30A RC Oven Only		
59	3001100	Relay 20A RC Oven Only		
60	2693900	BX Conduit		
61	G01497-1	BX Connector		

* NOT ILLUSTRATED

RECOMMENDED STOCK PARTS

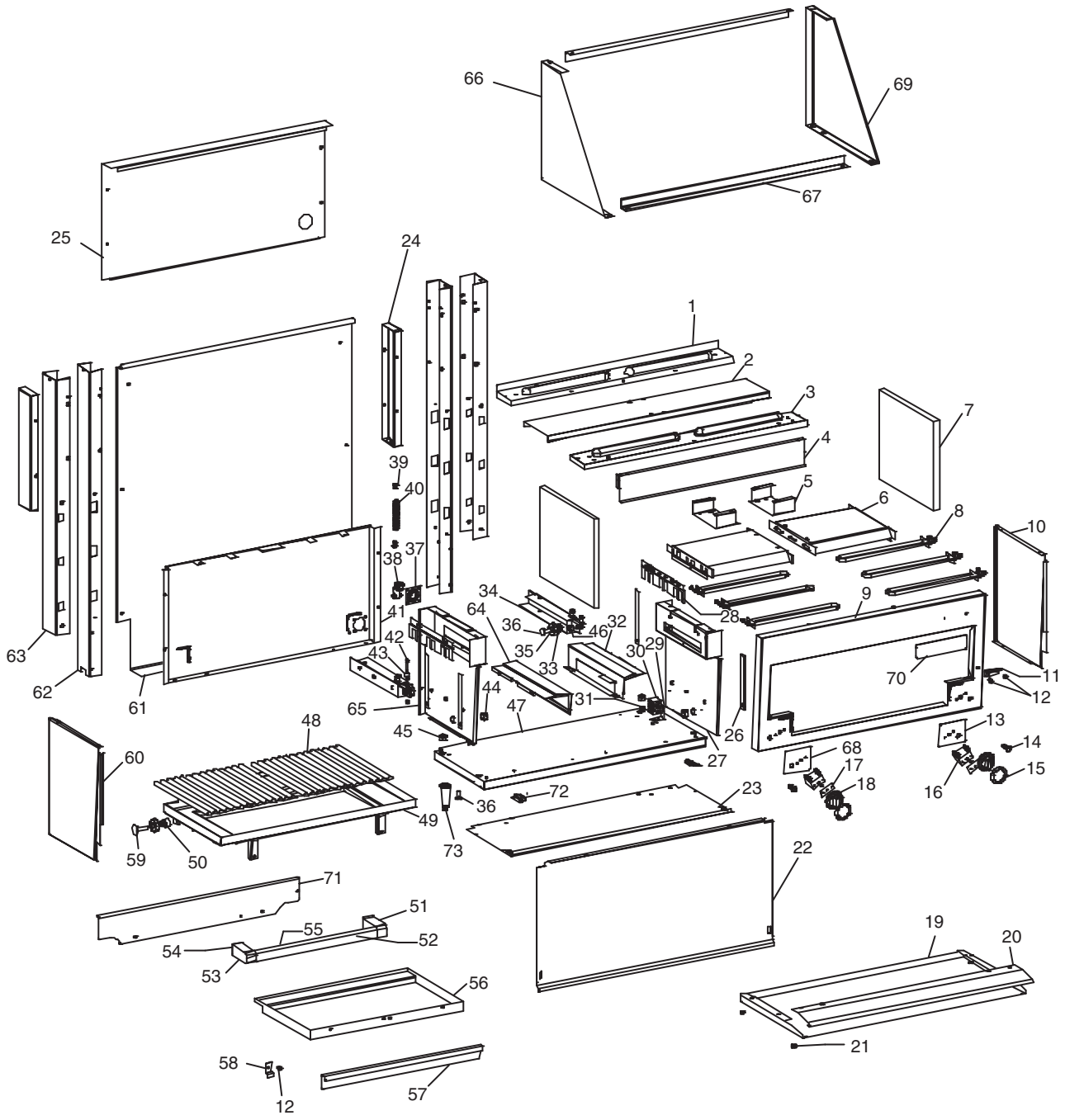
66
69
67
25
24
1
2
3
7
4
39
40
5
6
8
10
37
38
34
9
41
64
36
46
32
28
42
35
30
29
63
43
33
70
11
62
44
31
12
61
65
47
13
48
45
26
14
60
27
68
17
15
18
16
72
23
36
49
73
59
50
22
71
51
55
52
19
20
54
53
56
21
58
57
12

SK3658

GARLAND PARTS IDENTIFICATION

Electric Salamander Broiler

ITEM	PART #	DESCRIPTION	MODELS / QUANTITY			
			SERC	SUERC	SER-680	SUER-680
1	G01377-2-9	Main Top Back	1	1	1	1
2	G01376-2-9	Main Top Centre	1	1	1	1
3	G01375-1-9	Main Top Front	1	1	1	1
4	2688600	Front Brace	1	1	1	1
5	G02386-1-6	Element Pan Support	2	2	2	2
6	G02360-1-6	Element Radiation Pan	2	2	2	2
7	078100-16	FF Insulation .5”x14.5”x12.5”	2	2	2	2
8	G02359-1	Element - 208V	6		6	
	G02359-2	Element - 240V	6		6	
	G02359-3	Element - 230V	6	6	6	6
9	2688399	Front Frame Assembly	1	1	1	1
10	2567302	Main Side RH	1	1	1	1
11	G02461-1-9	Broiler Rack Stop (Marine Option)	1	1	1	1
12	F298	Truss Head Shoulder Bolt (Marine Option)	3	3	3	3
13	2685202	Overlay - RH	1	1	1	1
14	3000801	Indicator Lamp - Green	2	2	2	2
15	2693000	Dial Insert	2	2	2	2
16	G02667-1	3-Heat Switch	2	2	2	2
17	2699000	Switch Seal	2	2	2	2
18	2138705	Knob NLA - See Page 20	2	2	2	2
19	2612100	Heat Shield Bottom			1	1
20	2612000	Heat Shield Front			1	1
21	1473301	.5” Plug Button			4	4
22	2698200	Front Panel			1	1
23	2688099	Main Bottom Cover Assembly	1	1	1	1
	2688098	Main Bottom Cover Assembly - Stainless (Opt.)	1	1		
24	2567198	Support Bracket Assembly -Stainless	2	2		
25	2698800	Main Back - SERC, SUERC	1	1		
26	2699100	Insulation Retainer	2	2	2	2
27	2687900	Side Liner RH	1	1	1	1
28	2698700	Wire Guard	2	2	2	2
29	2171400	Terminal Block Mounting Bracket	1	1	1	1
30	2147300	Terminal Block	1		1	
	2147302	Terminal Block		1		1
31	G01500-1	Ground Lug	1	2	1	2
32	2688499	Switch Housing Assembly - RH	1	1	1	1
33	G01247-1-8	Washer Bearing	2	2	2	2
34	G02469-1-81	Roller Guide Assembly - RH	1	1	1	1
35	G01244-1	Roller Bearing	4	4	4	4
36	F157	3/8-16x1.250 Leg Leveler Screw	6	6	2	2
37	G1053-2-8P	Knockout Plate	1	1	1	1
38	1028500	90 Degree Romex Connector			1	1
39	1029600	Antishorts			2	2
40	2693900	Flexible BX Cable			.762 m	.762 m
41	2698400	Flue Back	1	1	1	1
42	F531	1/4-20UNCX1.25” Fillister Head Screw -304SS	4	4	4	4
43	G01989-1-8	Post Bearing .5”Dia.x.5”	4	4	4	4
44	G01487-8	Heyco SB87511 Bushing	2	2	2	2
45	G01507-1	Chase Nipple c/w Locknut	2	2	2	2

* NOT ILLUSTRATED

RECOMMENDED STOCK PARTS

GARLAND PARTS IDENTIFICATION

Electric Salamander Broiler

ITEM	PART #	DESCRIPTION	MODELS / QUANTITY			
			SERC	SUERC	SER-680	SUER-680
46	G01247-2	Front Bearing Bushing	2	2	2	2
47	2688100	Main Bottom	1	1	1	1
48	G02468-01-5	Half Round Rack	2	2	2	2
49	2593099	Rack Frame/Grease Chute Assembly	1	1	1	1
50	G01247-3	Rear Bushing	2	2	2	2
51	2559100	Handle End - RH	1	1	1	1
52	2690402	Handle Overlay	1	1	1	1
53	2559101	Handle End - LH	1	1	1	1
54	2580600	Handle End Insert	2	2	2	2
55	2193101	Extruded Handle	1	1	1	1
56	2601300	Grease Tray	1	1	1	1
57	2540700	Grease Tray Front	1	1	1	1
58	3000500	Grease Pan Stop (Marine Option)	1	1	1	1
59	G6424	Glider Bolt 3/8-16x2”	2	2	2	2
60	2567303	Main Side LH	1	1	1	1
61	2698500	Main Back (Std.)			1	1
	2698501	Main Back - Stainless (Opt.)			1	1
62	2698300	Upright			2	2
63	2698600	Upright Veneer			2	2
64	2688498	Switch Housing Assembly - LH	1	1	1	1
65	2687901	Side Liner LH	1	1	1	1
66	2582603	Wall Mount Bracket LH (Wall Mount Kit Option)	1	1		
67	G01467-1-5	Angle Bracket (Wall Mount Kit Option)	2	2		
68	2685201	Overlay - LH	1	1	1	1
69	2582602	Wall Mount Bracket RH (Wall Mount Kit Option)	1	1		
70	1902918	Nameplate	1	1	1	1
71	2592600	Rack Frame Assembly Front Veneer	1	1	1	1
72	G02463-1-9	Tie Down Bracket	2	2		
73	078109-1	4” Sanitary Legs (Option)	4	4		

* NOT ILLUSTRATED

RECOMMENDED STOCK PARTS

NOTES

GARLAND®

KNOB AND INSERT
INTRODUCED AUGUST 2002

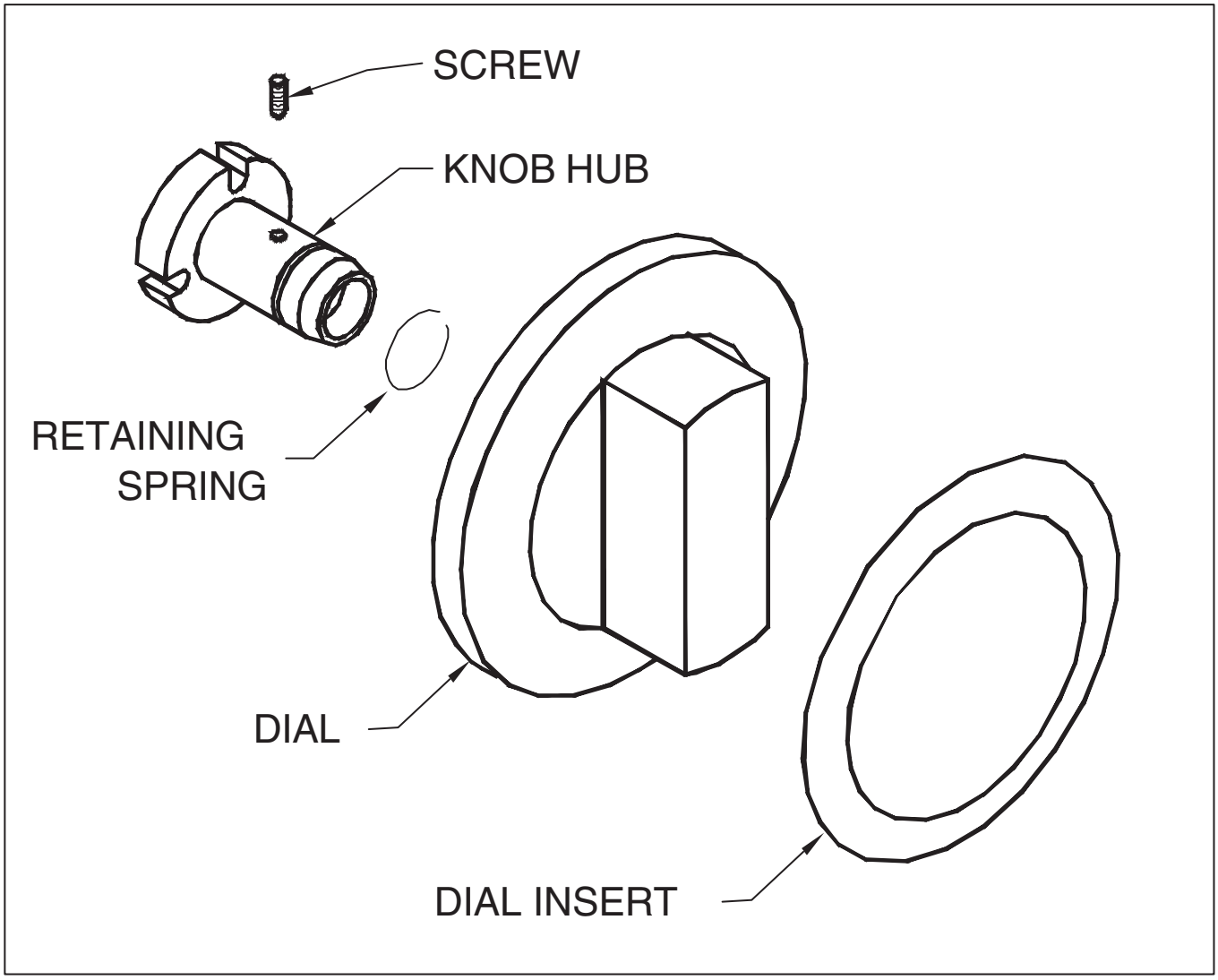

KNOB REPLACEMENT GUIDE										
		OLD KNOB REFERENCE			REPLACEMENT KIT CONTENTS					
KIT NUMBER	DESCRIPTION	OLD PART NUMBER	MODEL SERIES	Did old part require a dial insert? yes/no	KNOB PART NUMBER	HUB PART NUMBER	DIAL INSERT PART NUMBER	HUB RETAINING SPRING	SET SCREW	APPLICATION DESCRIPTION
4512109	KNOB KIT, 2138700,2685900	2138700	S680	2685900	3043100	3043207	2685900	3043300	None	Oven F
4512110	KNOB KIT, 2138700,2685901	2138700	S680	2685901	3043100	3043207	2685901	3043300	None	Oven C
4512111	KNOB KIT 2138700,2138800	2438700	ED,S680	2138800	3043100	3043207	2138800	3043300	None	Griddle F
4512112	KNOB KIT 2138700,2138801	2138700	ED,S680	2138801	3043100	3043207	2138801	3043300	None	Griddle C
4512115	KNOB KIT 2138700,2139000	2138700	ED,S680	2139000	3043100	3043207	2139000	3043300	None	Infinite Switch
4512135	KNOB KIT 2138700,2139100	2138700	ED,S680	2139100	3043100	3043206	2139100	3043300	F561,F562	6 heat switch
4512137	KNOB KIT 2138705,2693000	2138705	ED,S680	2693000	3043100	3043208	2693000	3043300	F561,F562	SERC/SER680 3 Heat Switch

New Knob.dwg

GARLAND® U.S. Range

BULLETIN # B-92-2002

From: Parts and Service Division **Date: October 4, 2002**
To: All Authorized Service Agencies

SUBJECT: E680 Circuit Breaker Replacement

Please find the enclosed E680 Circuit Breaker Replacement, Garland Bulletin. Please contact The Garland/US Range Parts or Technical Service Department with any question.

Garland Canada
Garland Commercial Ranges Limited
1177 Kamato Road, Mississauga
Ontario L4W 1X4 Canada
T 905.624.0260 / 888.442.7526
F 905.624.1851 / 800.361.2724
www.garland-group.com

E680 Circuit Breaker Replacement

PRELIMINARY
Instructions for kit numbers: 4512155, 4512156, and 4512157.

Caution: Disconnect the power supply before servicing.

These circuit breakers have been listed as an alternate construction on these models by CSA. Installation of this kit must be performed by qualified service personnel, according to local electrical codes.

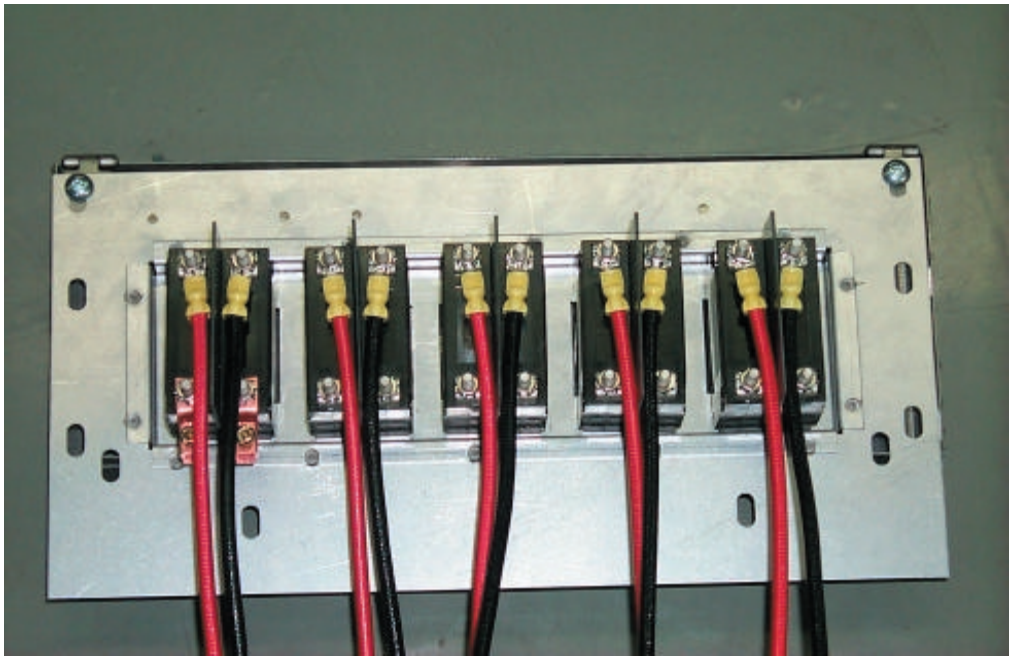

Circuit breaker assembly viewed from the rear. Wire extensions are connected to the LINE side of the circuit breakers. Since the old circuit breakers had the Line connections on the bottom wire extensions are required. The load side terminals angle toward the panel and the wire clamp is flipped (from the standard position) so the screw terminal is oriented to the connection side as shown on the left.

Front View of new circuit breaker panel.

Remove the existing circuit breaker panel. Label and identify all wires before removing from the old circuit breakers. It is important not to mix phases on the circuit breakers or mix wires between circuit breakers.

Splice the LINE side wires. Wrap each splice with a high temperature insulating tape (either glass tape or silicone tape). This will protect the splice in case it touches a hot surface.

Connect the LOAD side wires to the lugs. If any load side wires are too short, use a piece of 10AWG, 200C wire and an appropriate splice to extend the wire. Tape the splice with the same high temperature insulating tape. Tape the lugs when complete.

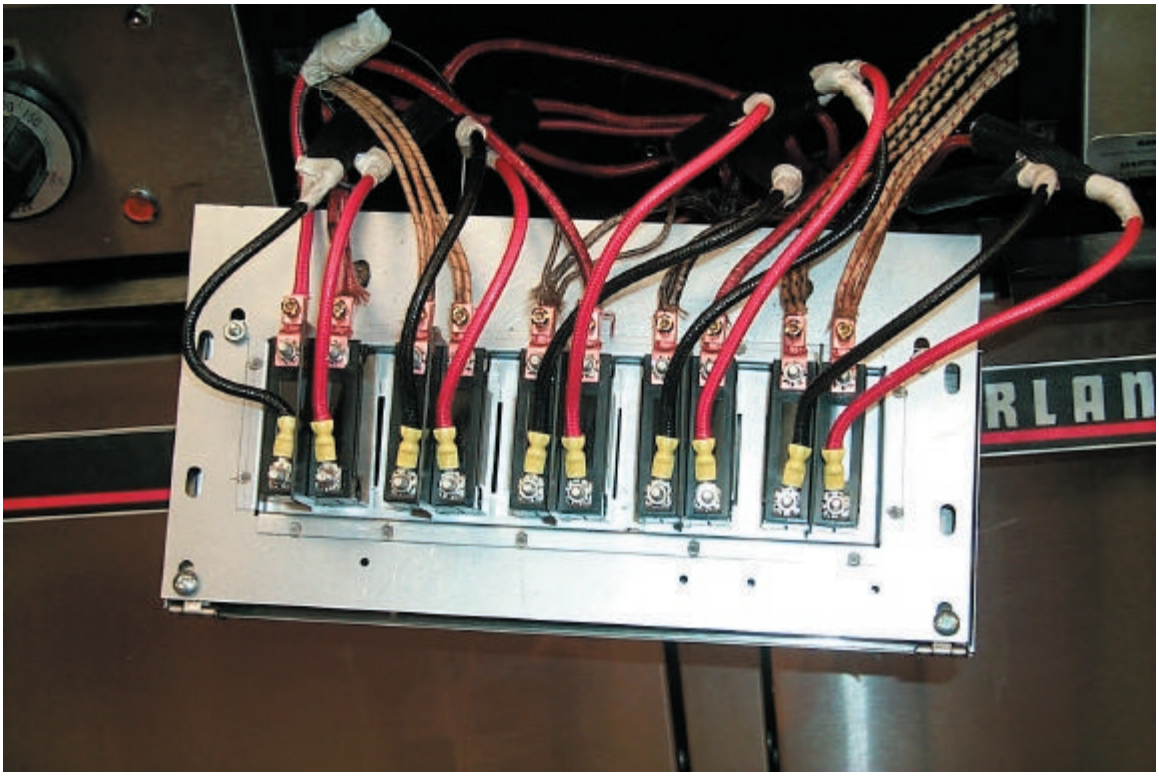

Carefully dress the wires in such a way as not to damage or pinch any wires when assembling the panel.

Remove the rating plate and all other markings from the old panel and install them on the new panel. This will require the use of a drill to remove the rating plate and 1/8" pop rivets to re-attach the rating plate to the new panel.

Where possible before applying power, use a Megohm Meter or a Dielectric tester to test the insulation strength. Test each oven and top section individually to verify that all zones are functioning correctly.

GARLAND PARTS IDENTIFICATION

E680 Circuit Breaker Kit Material List

ITEM	PART #	DESCRIPTION	QUANTITY		
			Model E686 Kit4512155	Model E686 withSalamander Kit4512156	Model E684 Kit4512157
1	G1883-03-9	Front Panel Assembly, E686	1	1	
	G1883-04-9	Front Panel Assembly, E684			1
2	G1884-02-8	Circuit Breaker Cover Assembly, E686	1	1	
	G1885-02-8	Circuit Breaker Cover Assembly, E684			1
3	2688802	Circuit Breaker, 40Amp, 2 Pole	3	4	5
4	1203802	Circuit Breaker Patch 2-Hole	1		
5	G01500-1	55A Lug	6	8	10
6		Wire Assembly, Red	3	4	5
		Wire Assembly, Black	3	4	5
7		Crimp Connector, Nylon Insulated Splice, 12-10AWG	6	8	10
		Glass or Silicone Insulating Tape (as required)			
	F288	1/8” POP Rivet	2-4	2-4	2-4

Reference Wiring Diagrams

	G03358	686, 686-1, 686-2	*	*	
	G03359	686-24G, 686-1-24G	*	*	
	G03360	686-36G	*	*	
	G03361	686-12G, 686-1-12G, 686-2-12G	*	*	
	G03362	684, 684-1, 684-2			*
	G03363	684-36G, 684-1-36G, 684-2-36G			*
	G03364	684-24G, 684-1-24G, 684-2-24G			*
	G03365	684-12G, 684-1-12G, 684-2-12G			*

GARLAND PARTS IDENTIFICATION

Revision History

REV #	PAGE	ITEM	DESCRIPTION	DATE
1	5	31	New number 2687000 was 2688700	Nov 15/02
			New number 2687001 was 2688701	
			New number 2687002 was 2688702	
2	8 & 11	85	Part numbers deleted	Feb 3/03
		86		
		87		
		88		
3	18		Knob Replacement Guide Added	Feb 11/03
19			Circuit Breaker Bulletin B-92-2002 Added	
4	9	55	Part Number 1193900 Added	Aug 13/03
5	13	45 & 46	Include part # 2146900 as item 46 - was under item 45	Nov 13/03
6			Entire Book Reformatted	Nov 22/04
	4		Item 12A and 12B Added	
	5 &6	12A & 12B	New Part Numbers	
7	13	17	4518244 was 2597999 / 4518245 was 2597998 4518246 was 2597997 / 4518247 was 2597996. All new griddle assembly will be interchangeable with the current design. Implementation date: Nov. 1/04	Dec 10/04

NOTES

GARLAND®