Parts Catalog

Commercial Pro

Model CPF32

ELECTRIC FRYERS

MODELS:
CPF10, CPF16 & CPF32

01-11-2010
IMPORTANT!
TO EXPEDITE SHIPMENT OF PARTS, ALWAYS SPECIFY MODEL, REV, PART NUMBER, AND SERIAL NUMBER OF SLICER.

GLOBE FOOD EQUIPMENT COMPANY

2215 East River Road
Dayton, Ohio 45439

Parts Department
Toll Free 1-800-745-6238 · Fax (937) 290-0585
E-Mail: globeinfo@globeslicers.com
Website: www.globeslicers.com

Not for resale

TABLE OF CONTENTS

	PAGE
CPF10 FRYER	1
CPF16 FRYER	2
CPF32 FRYER	3 - 4
WIRING DIAGRAM	5

CPF10 COMPONENTS

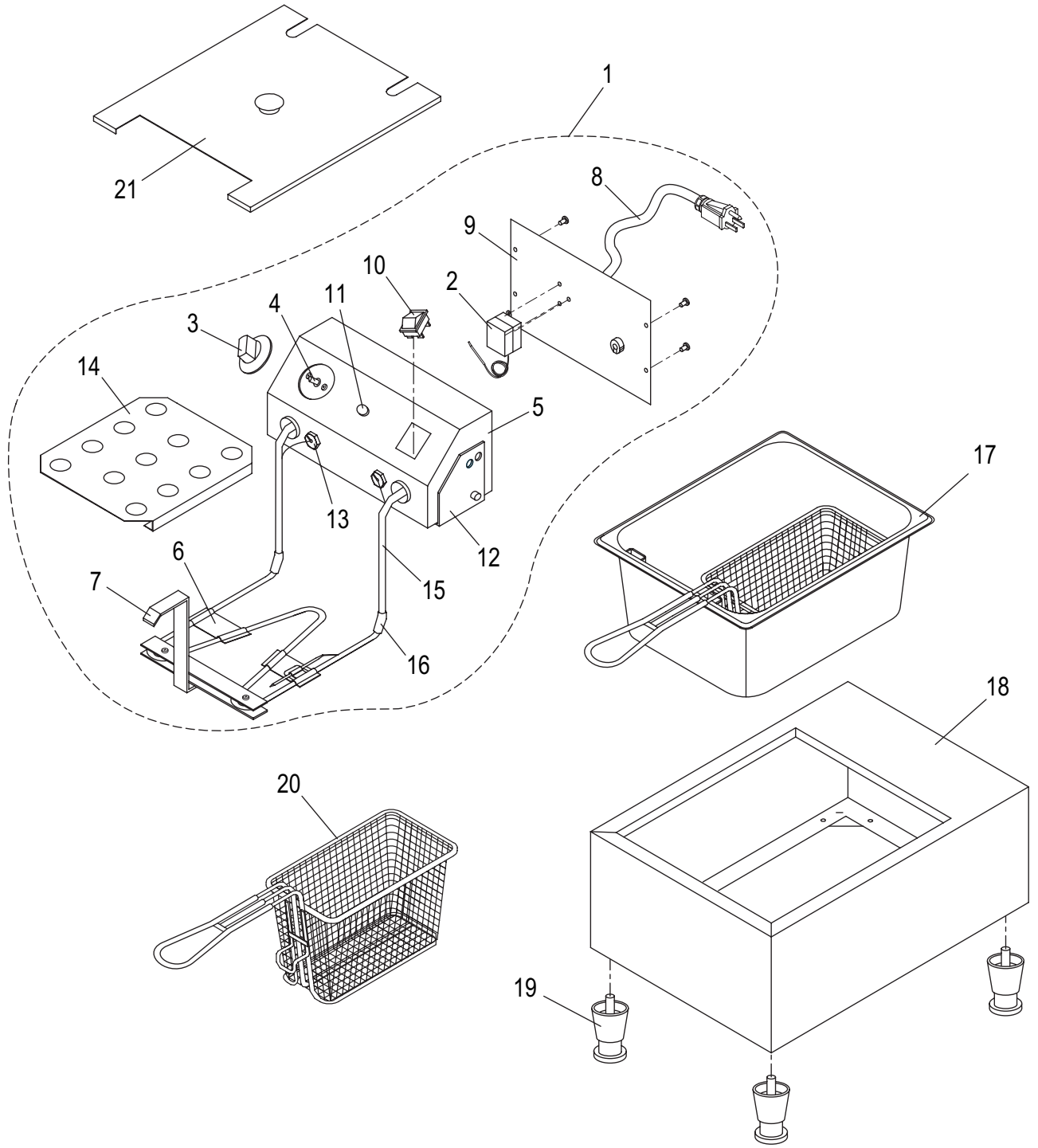

Item	Description	Part No.	Qty	Item	Description	Part No.	Qty
1	Control Box Assembly	U06051470132	1	11	Indicator Light (120V)	U03091240005	1
2	Thermal Cut Out	U03051220004	1	12	Control Assy Support Brkt	-	2
3	Thermostat Knob	U02101155013	1	13	Stuffing Nut	U01021005017	2
4	Thermostat	U03051220008	1	14	Element Cover	U01051025555	1
5	Control Enclosure	-	1	15	Heating Element	U03061225044	1
6	Tube Clamp	U01051025402	2	16	Tube Bend Clamp	U01051025128	2
7	Element Hook	U01091050002	1	17	Pan	U01121063013	2
8	Cord & Plug (120V)	U03021205012	1	18	Fryer Cabinet	-	1
9	Back Cover Plate	-	1	19	Foot	U01021005002	4
10	On/Off Switch	U03041215027	1	20	Basket	U01101061011	2
				21	Cover *Optional extra	U01051025844	1

CPF16 COMPONENTS

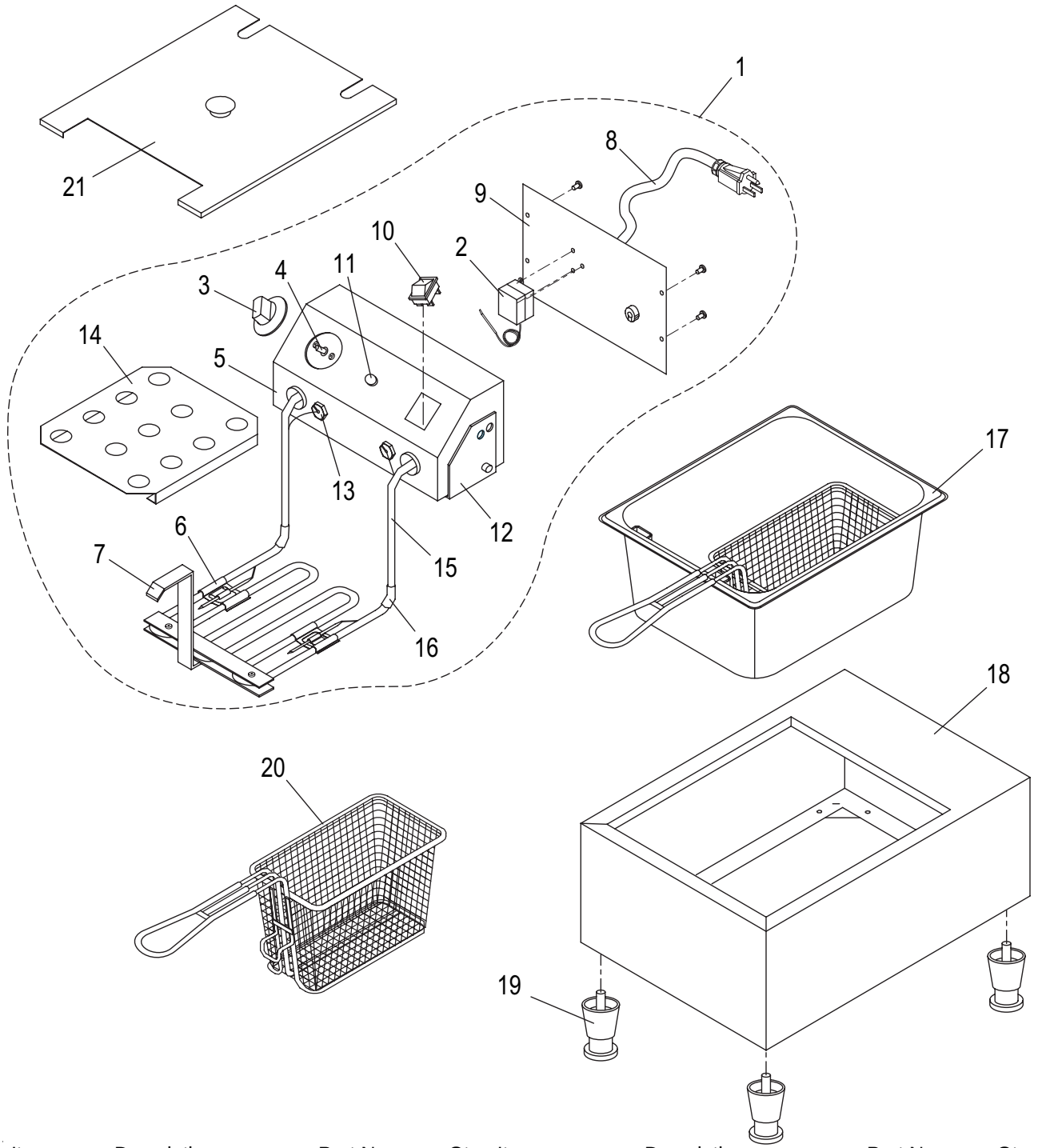

Item	Description	Part No.	Qty	Item	Description	Part No.	Qty
1	Control Box Assembly	U06051470151	1	11	Indicator Light (240V)	U03091240006	1
2	Thermal Cut Out	U03051220004	1	12	Control Assy Support Brkt	-	2
3	Thermostat Knob	U02101155013	1	13	Stuffing Nut	U01021005017	2
4	Thermostat	U03051220008	1	14	Element Cover	U01051025555	1
5	Control Enclosure	-	1	15	Heating Element	U03061225047	1
6	Tube Clamp	U01051025117	2	16	Tube Bend Clamp	U01051025128	2
7	Element Hook	U01091050001	1	17	Pan	U01121063016	1
8	Cord & Plug (240V)	U03021205013	1	18	Fryer Cabinet	-	1
9	Back Cover Plate	-	1	19	Foot	U01021005002	4
10	On/Off Switch	U03041215027	1	20	Basket	U01101061009	2
				21	Cover *Optional extra	U01051025474	1

CPF32 COMPONENTS

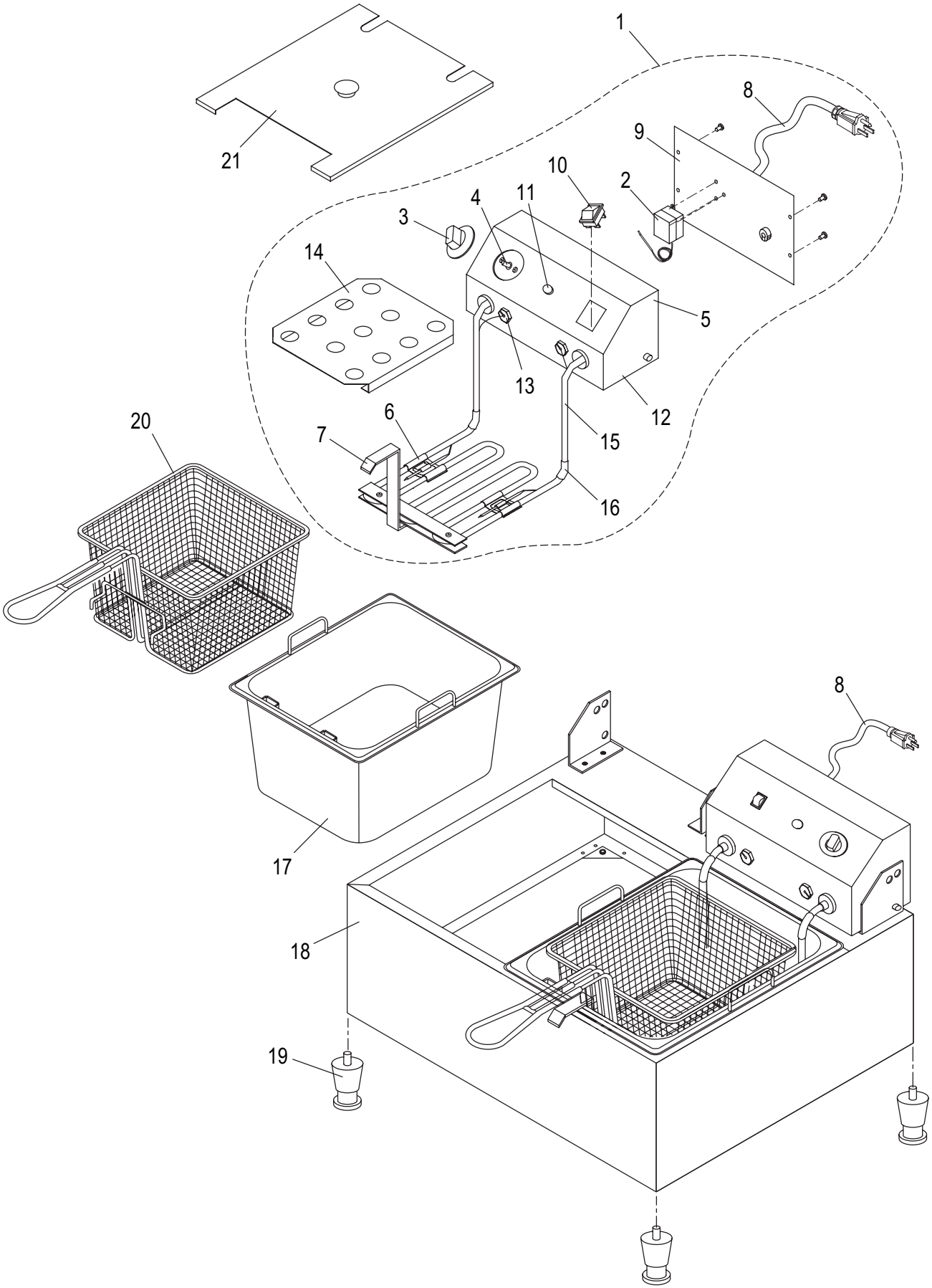

CPF32 PARTS LIST

Item	Description	Part No.	Qty
1	Control Box Assembly, Left	U06051470149	1
	Control Box Assembly, Right	U06051470151	1
2	Thermal Cut Out	U03051220004	2
3	Thermostat Knob	U02101155013	2
4	Thermostat	U03051220008	2
5	Control Enclosure	-	2
6	Tube Clamp	U01051025117	4
7	Element Hook	U01091050001	2
8	Cord & Plug (240V)	U03021205013	2
9	Back Cover Plate	-	2
10	On/Off Switch	U03041215027	2
11	Indicator Light (240V)	U03091240006	2
12	Control Assy Support Bracket	-	4
13	Stuffing Nut	U01021005017	4
14	Element Cover	U01051025555	2
15	Heating Element	U03061225047	2
16	Tube Bend Clamp	U01051025128	4
17	Pan	U01121063016	2
18	Fryer Cabinet	-	1
19	Foot	U01021005002	4
20	Basket	U01101061016	4
21	Cover *Optional extra	U01051025474	2
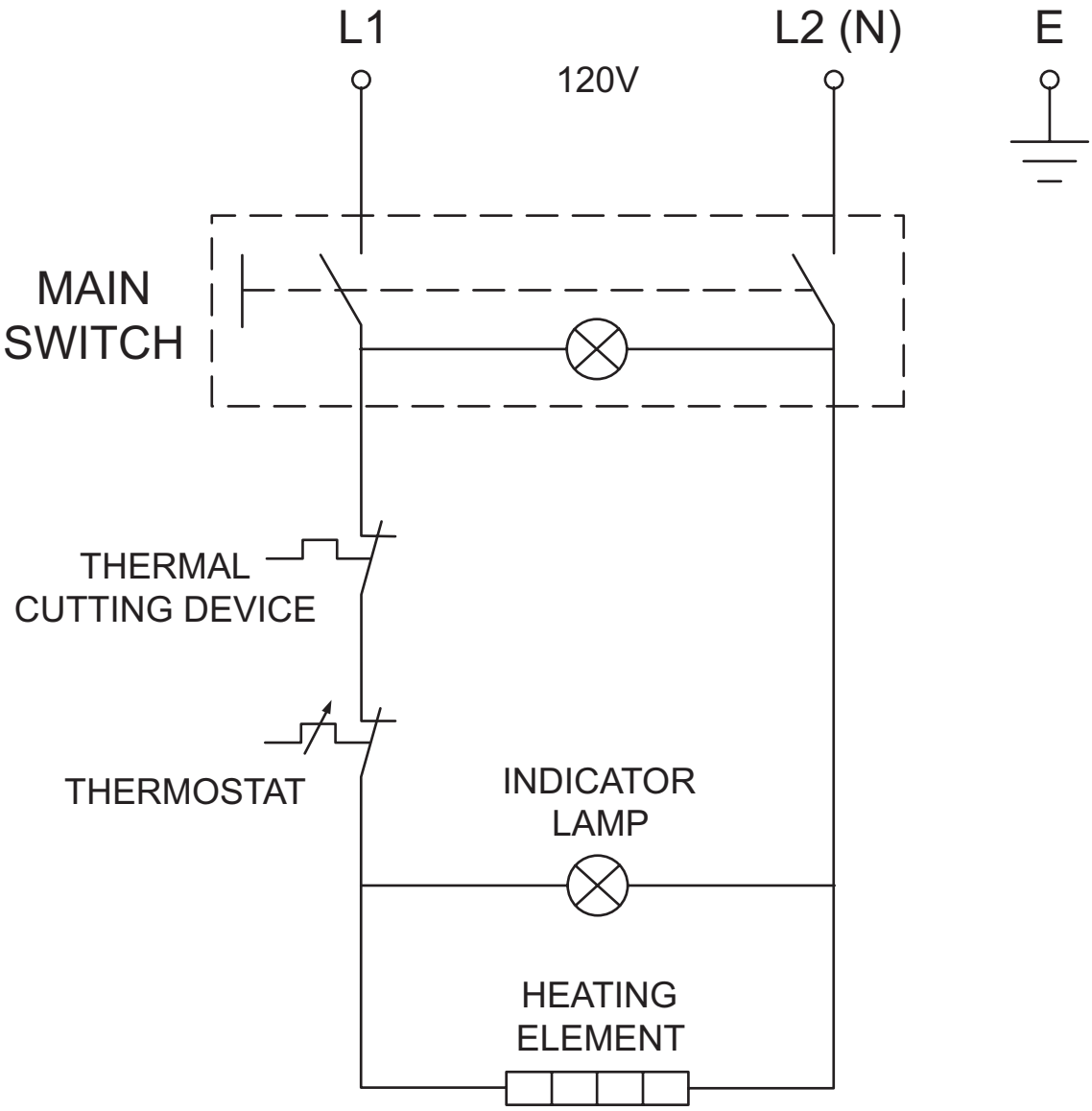
WIRING DIAGRAM, CPF10/CPF16/CPF32 FRYERS