HENNY PENNY™

Global Foodservice Solutions

Henny Penny Computron 7000

Gas and Electric Pressure Fryers

SERVICE MANUAL

The Henny Penny Computron 7000

Product Numbers 02213, 01208, and 02502

This excerpt for the Model 500 and 600 Pressure Fryer service manual provides additional information related to product numbers 02213, 01208, and 02502 Computron 7000. This excerpt covers the programming, operation, and troubleshooting for the computer control. All other information not related to the computer control is contained in the pressure fryer service manual.

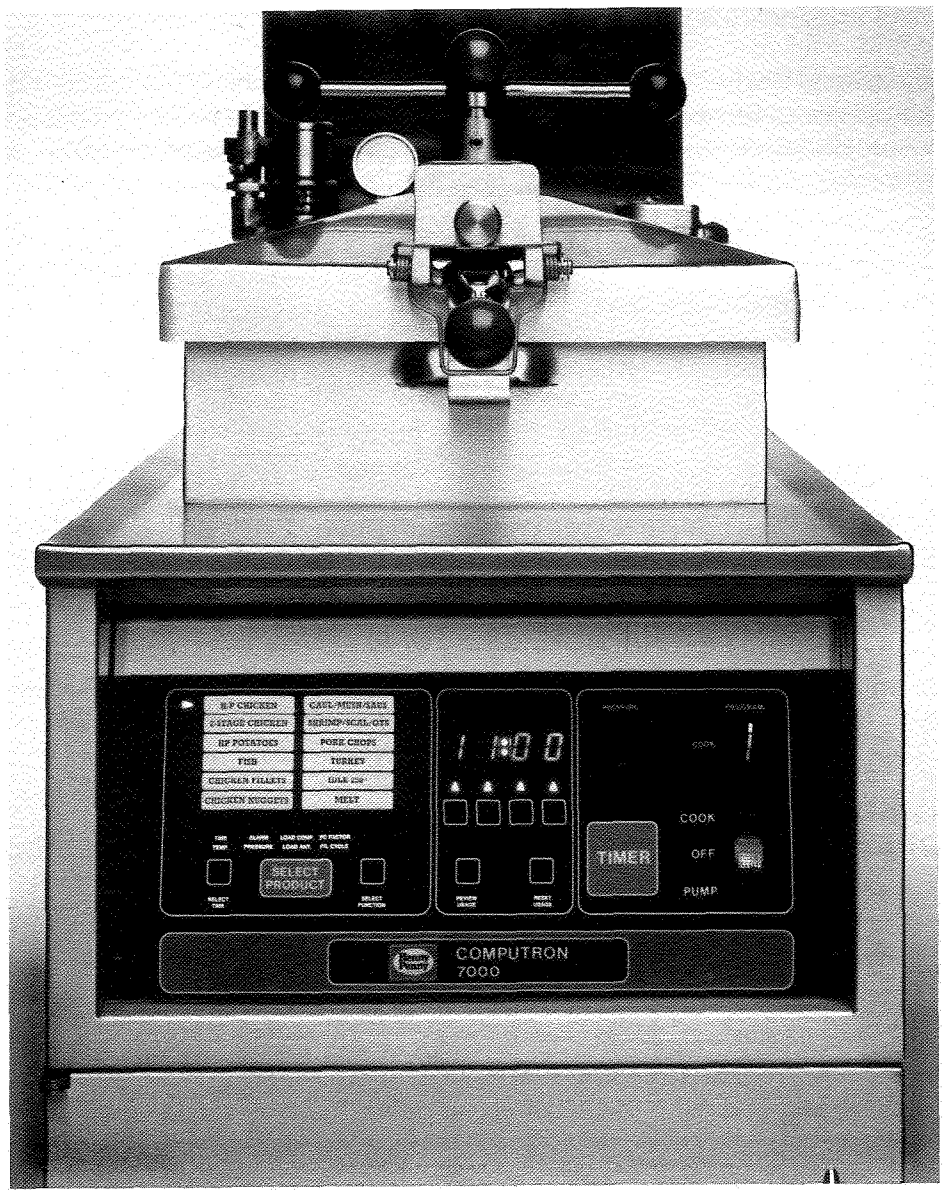

LIMITED WARRANTY FOR HENNY PENNY APPLIANCES

Subject to the following conditions, Henny Penny Corporation makes the following limited warranties to the original purchaser only for Henny Penny appliances and replacement parts:

NEW EQUIPMENT: Any part of a new appliance, except lamps and fuses, which proves to be defective in material or workmanship within two (2) years from date of original installation, will be repaired or replaced without charge F.O.B. factory, Eaton, Ohio, or F.O.B. authorized distributor. To validate this warranty, the registration card for the appliance must be mailed to Henny Penny within ten (10) days after installation.

REPLACEMENT PARTS: Any appliance replacement part, except lamps and fuses, which proves to be defective in material or workmanship within ninety (90) days from date of original installation will be repaired or replaced without charge F.O.B. factory, Eaton, Ohio, or F.O.B. authorized distributor.

The warranty for new equipment and replacement parts covers only the repair or replacement of the defective part and does not include any labor charges for the removal and installation of any parts, travel or other expenses incidental to the repair or replacement of a part.

EXTENDED FRYPOT WARRANTY: Henny Penny will replace any frypot that fails due to manufacturing or workmanship issues for a period of up to seven (7) years from date of manufacture. This warranty shall not cover any frypot that fails due to any misuse or abuse, such as heating of the frypot without shortening.

0 TO 3 YEARS: During this time, any frypot that fails due to manufacturing or workmanship issues will be replaced at no charge for parts, labor, or freight. Henny Penny will either install a new frypot at no cost or provide a new or reconditioned replacement fryer at no cost.

3 TO 7 YEARS: During this time, any frypot that fails due to manufacturing or workmanship issues will be replaced at no charge for the frypot only. Any freight charges and labor costs to install the new frypot as well as the cost of any other parts replaced, such as insulation, thermal sensors, high limits, fittings, and hardware, will be the responsibility of the owner.

Any claim must be represented to either Henny Penny or the distributor from whom the appliance was purchased. No allowance will be granted for repairs made by anyone else without Henny Penny's written consent. If damage occurs during shipping, notify the sender at once so that a claim may be filed.

THE ABOVE LIMITED WARRANTY SETS FORTH THE SOLE REMEDY AGAINST HENNY PENNY FOR ANY BREACH OF WARRANTY OR OTHER TERM. BUYER AGREES THAT NO OTHER REMEDY (INCLUDING CLAIMS FOR ANY INCIDENTAL OR CONSQUENTIAL DAMAGES) SHALL BE AVAILABLE.

The above limited warranty does not apply (a) to damage resulting from accident, alteration, misuse, or abuse; (b) if the equipment's serial number is removed or defaced; or (c) for lamps and fuses. THE ABOVE LIMITED WARRANTY IS EXPRESSLY IN LIEU OF ALL OTHER WARRANTIES, EXPRESS OR IMPLIED, INCLUDING MERCHANTABILITY AND FITNESS, AND ALL OTHER WARRANTIES ARE EXCLUDED. HENNY PENNY NEITHER ASSUMES NOR AUTHORIZES ANY PERSON TO ASSUME FOR IT ANY OTHER OBLIGATION OR LIABILITY.

OPERATION

This section describes the functions of all operating controls and their components.

Item	Description	Function
1	Decal Switch	The decal switch is a pressure sensitive membrane switch which activates the functions of the control.
2	Menu Board	The menu board displays the products that have been programmed within the control.
3	Menu Indicator	The menu indicators, when illuminated, point to the product cycle the control is in.
4	Done Indicator	This indicator shows the operator the cooking cycle is completed.
5	Digital Display	The digital display is a LED type display which shows the temperature of the shortening and the timer countdown of the frying cycle.
6	Ready Light	The ready light indicates the shortening has reached operating temperature and the operator may drop product.
7	High Limit Light	This light will illuminate in the event the manual reset high limit has tripped. This indicates the shortening temperature has exceeded the safe operating limit.
8	Change Switch Indicators	These indicators, when illuminated, show which part of the display is functional for programming such as increasing or decreasing temperature, time, etc.
9	Pressure Light	When illuminated, shows the solenoid is closed which allows pressure to build.
10	Key Switch	When in the COOK position the unit is in the normal operation mode. In the PROGRAM position the unit is in the program mode.
11	Power Switch	This switch is a sealed illuminated rocker type switch. When in the COOK position, applies power to the control. When in the PUMP position applies power to the pump motor.
12	Timer Switch	The timer switch is used to start, stop, or abort a cooking cycle.
13	Reset Usage Switch (Program Mode Only)	This switch resets the total number of cycles that have been cooked either in one product or in all products.
14	Change Switches (Program Mode Only)	These switches change the value of the displayed number. Such as increasing or decreasing the time of a cook cycle, or increasing or decreasing the temperature of a cook cycle.

Item	Description	Function
15	Review Usage Switch (Program Mode Only)	By depressing this switch the display will show you the number of cook cycles that have been cooked for a particular product.
16	Select Function Switch (Program Mode Only)	This switch will change the function that is being programmed such as time, temperature, alarm, etc.
17	Select Product Switch	This switch selects the product you wish to cook or program.
18	Select Time Switch	The select time switch selects the interval within a product. There are ten intervals per product.
19	Function Display (Program Mode Only)	The function display will show you the function you are in when programming.
20/27	Primary and Secondary Contactor	The contactors are relays that route power to the heating elements. The primary relay coil is in series with the high temperature control and the secondary relay coil is in series with the heat control circuit.
21	Thermal Sensor	The thermal sensor determines the shortening temperature.
22	High Limit Thermostat	The high limit thermostat is a manual reset control that senses the shortening temperature in the event the temperature exceeds the safe operating limit.
23	Transformer	The transformer is a step down type transformer. It converts high voltage to lower voltage.
24/25	Fuses	The fuses provide an overload protection for the control panel.
26	Fan	The fan's function is to eliminate any heat build up inside the control panel area.
	Back-Up High Limit Thermostat (Not Shown)	This is a back-up high limit thermostat in the event the temperature exceeds the safe operating limit.

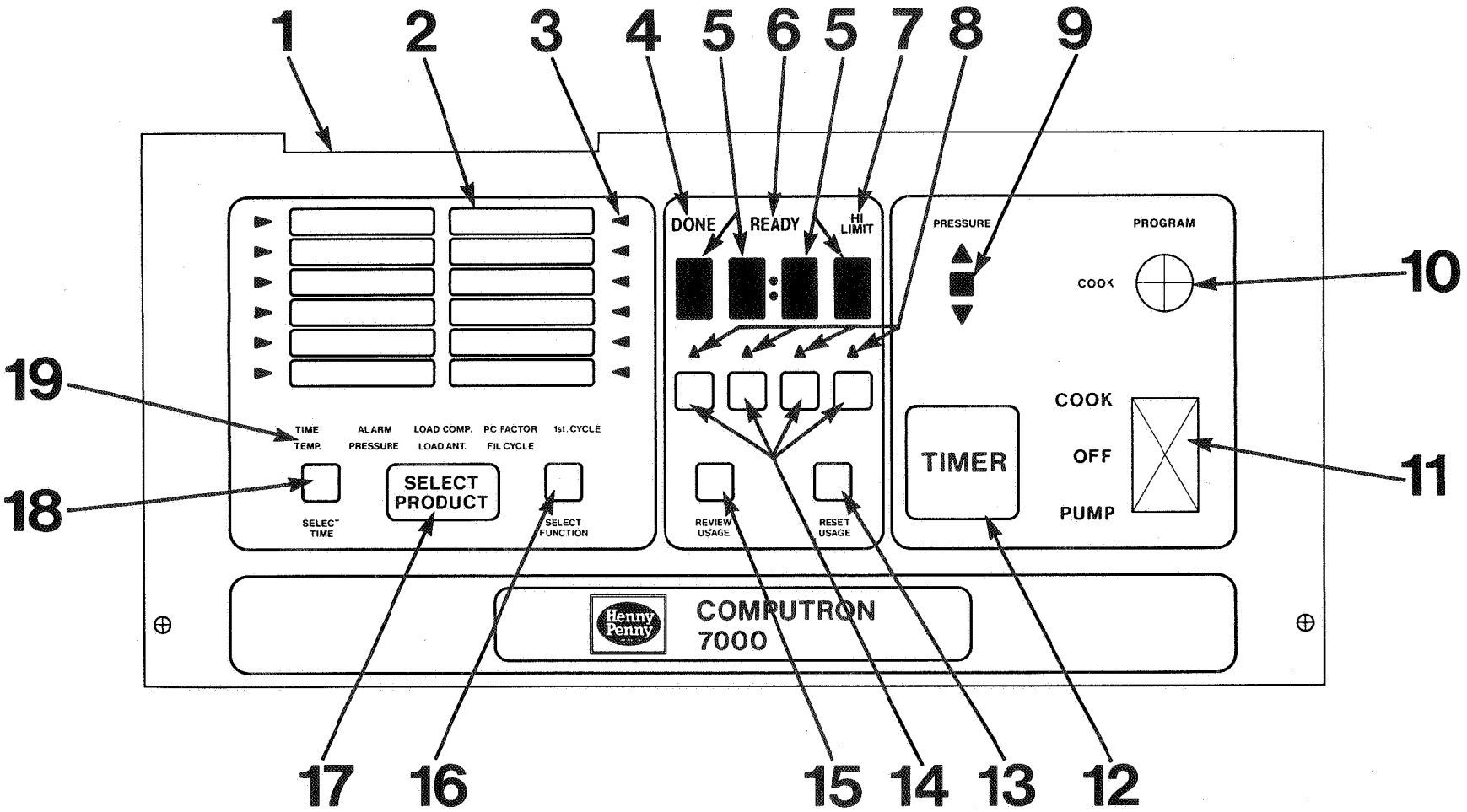
1
2
3
4
5
6
5
7
8
9
10
11
12
13
14
15
16
17
18
19
DONE
READY
HI LIMIT
PRESSURE
PROGRAM
COOK
COOK
OFF
PUMP
TIMER
TIME
TEMP.
ALARM
PRESSURE
LOAD COMP.
LOAD ANT.
PC FACTOR
FIL CYCLE
1st. CYCLE
SELECT TIME
SELECT PRODUCT
SELECT FUNCTION
REVIEW USAGE
RESET USAGE
Henny Penny
COMPUTRON 7000

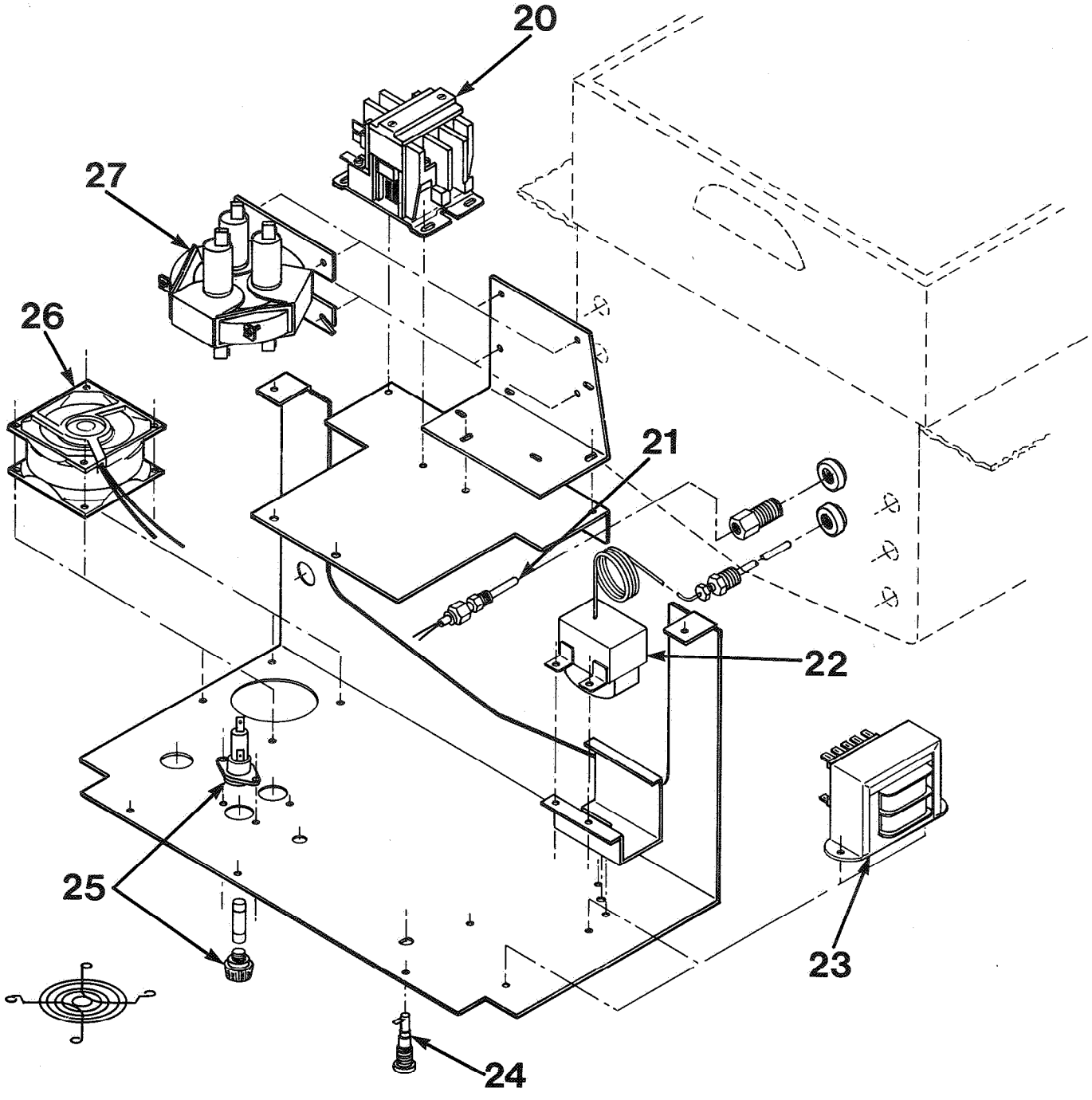
20
27
26
21
22
25
23
24

BASIC PROGRAMMING

INTRODUCTION

This section provides programming procedures for the Computron 7000. The operational controls should be read and understood to become familiar with the control and its functions. If technical assistance is needed, refer to the toll free number printed in this manual.

NOTE

It is recommended to fill out the program worksheet that was shipped with the unit before programming. This will result in less confusion when programming the control.

PROGRAMMING

1. Move the keyswitch to the PROGRAM position.

2. Depress the SELECT PRODUCT switch to the desired product. The red indicator light will illuminate beside the particular product you are programming.

3. By depressing the SELECT FUNCTION switch, you pick the function to program such as time, temperature, etc. The function you are in will be flashing. Program TIME first.

4. Depress the change switches beneath the digital display until the desired time is displayed. Example: 11 minutes - 11:00.

5. Continue this procedure until you have programmed TIME, TEMPERATURE, ALARM, and PRESSURE.

NOTE

An alarm cannot be programmed on the first interval of any product. Also, your programming temperature range is from 170° to 390°F.

6. By depressing the SELECT TIME switch you can change intervals within that function. You may program up to 10 intervals per function.

7. Load compensation, load anticipation, proportional control, and filter cycle can only be programmed in interval one. When changing to interval two, only time, temperature, alarm, and pressure will illuminate in the function display.

8. Following are two examples.

Example 1
Single Stage Chicken

Time: 12 Minutes
Temperature: 325°F
Alarm: None
Pressure: On

INTERVAL

FUNCTION	1	2	3	4	5	6	7	8	9	10
TIME	12 Min.									
TEMPERATURE	325°F									
ALARM	Cannot be programmed on Interval 1						(One interval used)			
PRESSURE	ON									

Example 2
Two Stage Chicken

Time: 13 Minutes 1 Minute Browning - 12 Minutes
Temperature: 375°F HI 275°F LO
Alarm: After 1 Minute
Pressure: On

INTERVAL

FUNCTION	1	2	3	4	5	6	7	8	9	10
TIME	13 Min.	12 Min. 1 Min. Browning								
TEMPERATURE	375°F	275°F								
ALARM	Cannot be programmed on Interval 1	ON					(Two intervals used)			
PRESSURE	ON	ON								

LOAD COMPENSATION

Load compensation, although factory preset, is programmable. Load compensation adjusts cooking times to compensate for differences in the cooking process such as load size. The control is continuously comparing the pot temperature to the setpoint temperature. If the pot temperature is above the set point, then the control will shorten the cook time. If the pot temperature is below the setpoint, then the control will lengthen the cook time. This is programmable within this function by displaying 0 to 10. Zero meaning no load compensation, while ten means the highest load compensation.

LOAD ANTICIPATION

When dropping a large load of product into the fryer, there is a large temperature drop. On normal controls there is a time period before the thermostat senses this drop. With load anticipation this time period is avoided by turning the heat on as soon as the timer is activated. The heat will remain on until the control senses that the temperature is increasing at which point normal heat control takes over. When programming, the display will read 0^0 to 10^0F. For example: if 5 degrees is programmed, this means the temperature cannot exceed five degrees above setpoint temperature before normal heat control takes over. This is a safeguard or a temperature limit.

PROPORTIONAL CONTROL

Proportional control regulates pot temperature by pulsing the heat until it reaches setpoint temperature. This allows tighter regulation of pot temperature and also eliminates the "override" of setpoint temperature. The control can be programmed 0 to 30 degrees; zero being no proportional control (best recovery time) and up to thirty degrees meaning the control will pulse the heat off and on thirty degress before it reaches setpoint (best temperature regulation). Since each product can be programmed with a different proportional control factor, temperature accuracy and recovery time can be tailored to each food product.

FILTER CYCLE COUNT

The filter cycle count is a method of keeping track of when it is time to filter the shortening. To determine when it is time to filter, the control adds the (fractional) number of the cycle count to a running total at the end of each cook cycle. When this total exceeds one, then the "FIL" ("FIL" within the digital display) indication is given.

An example of this would be as follows:

Product	Programmed No. of Cook Cycles		Cycle Count
Chicken	4	=	1/4
Fish	3	=	1/3
Potatoes	2	=	1/2
Vegetables	2	=	1/2

If the operator cooked one cycle of chicken, one cycle of fish, and one cycle of potatoes, the unit would indicate to filter since 1/4 + 1/3 + 1/2 = 1 1/12 which is greater than one. In the event the unit cannot be filtered at the proper time the filter program mode may be bypassed. Turn the power switch to OFF for at least 5 seconds, then turn the unit back to the COOK position. Filter will be bypassed and unit will return to programmed 1st cycle.

IDLE MODE

The idle modes main function is to lessen the breakdown of shortening, by programming a lower temperature, when the unit is not in use. The idle mode can be selected by depressing the SELECT PRODUCT switch until the idle mode is indicated. Automatic idle is enabled by programming "A" in the display. Also, the idle time can be programmed. This means the control will select idle automatically after the programmed time has elapsed.

NOTE

If automatic is not programmed, idle must be selected manually. Idle time is programmed from 0 to 255 minutes.

When this is programmed the type of idle can be selected: cycle idle or time idle. This is indicated with a "C" or "T". In cycle idle the programmed time is started every time a new product is selected. In timer idle the programmed time is started at the end of each cook cycle. Depress the SELECT FUNCTION switch. A "C" or "T" will be displayed indicating cycle idle or time idle. Also, the idle temperature can be programmed from 170°F to 390°F. This is normally set at 250°F.

IDLE MODE (continued)

The following are four examples of the idle mode.

Example 1: AUTOMATIC IDLE - idle temperature is 250°F and the idle time is 30 minutes. Control is programmed in **cycle idle.** If no product is cooked within 30 minutes, control will automatically select IDLE and regulate at 250°F.

Example 2: AUTOMATIC IDLE - idle temperature is 250°F and the idle time is 30 minutes. Control is programmed in **cycle idle. Several loads of different products are cooked.** As long as no more than 30 minutes pass between product selections, the control will not select idle.

Example 3: AUTOMATIC IDLE - idle temperature is 250°F and the idle time is 30 minutes. Control is programmed in **timer idle.** A product is selected and several loads are cooked. As long as a load is cooked within 30 minutes of the last load, the control will not go into idle. If 30 minutes pass between loads, the control will automatically select idle.

Example 4: AUTOMATIC IDLE IS NOT PROGRAMMED - control in manual idle. The control will remain in the product selected by the operator. Operator must use SELECT PRODUCT switch to enter idle mode.

MELT MODE

The melt mode is used to safely melt solid shortening and can also be used with liquid shortening. Gradually heating or melting the shortening greatly extends its life. This is automatically accomplished in the melt mode by turning the heat on for 3 seconds and off for 27 seconds. The operator has the option of entering melt manually with the SELECT PRODUCT switch or programming automatic melt. Select the melt mode and program "A" for automatic. At this time also program the melt temperature. This is the temperature the control will exit the melt mode and go into the heat mode. It is recommended to program this temperature at 170°F. After programming, the control will work as follows: when the unit is turned on the control checks the pot temperature. If the pot temperature is below 170°F or programmed temperature, the unit will enter the melt mode. If the pot temperature is above 170°F or programmed temperature, the unit will enter the programmed 1st cycle.

NOTE

Once pot temperature exceeds the programmed melt temperature the melt mode cannot be entered.

PROGRAMMING 1st CYCLE

While in the melt mode, the first cycle can also be programmed. This is the cycle the control will automatically select when in COOK upon exiting the melt mode. It is programmed by selecting the melt mode and depressing the SELECT FUNCTION switch. The green 1st cycle light will flash and the temperature light in the function display will be on. The left half of the product display are numbered from top to bottom, 1 to 6. The right half are numbered 7 to 10. Melt and Idle are not numbered. However, idle can be selected as the first cycle. If number one of the product display is desired as first cycle, program a number one. If number eight of the product display is desired, program number eight.

NOTE

An unprogrammed product cycle cannot be selected as the first cycle.

ONE BUTTON HENNY PENNY COOKING PARAMETERS

The one button programming feature is a simple way for the operator to place Henny Penny's cooking parameters into the control's memory. These programmed cooking cycles are matched with the menu item cards sent with each unit. To achieve this one button programming, follow these steps:

1. Turn the COOK/PROGRAM keyswitch to the PROGRAM position.

2. Depress the TIMER switch. This will put you into the Special Program Mode. The display will read "SP".

3. Using the SELECT PRODUCT switch, select the number 7 product (this will be the top right menu item). The display will read as follows:

Digit	☐	☐	☐	☐
	4	3	2	1

Digit 1: Blank - When the switch under the digit is depressed it will read INIT for one second then erase all memory.

Digit 2: Blank - When the switch under the digit is depressed it will enter all Henny Penny cooking parameters. Display will read INIT for one second, then HP.

Digit 3: Display will read either F for Fahrenheit degrees or C for Celcius degrees. By depressing the switch under the digit, it will toggle from F to C.

Digit 4: Display will read either E for electric or O for gas units. By depressing the switch under the digit it will toggle from E to O.

TIMING THROUGH POWER INTERRUPTIONS

This feature will aid the operator in the event there is a power outage. If the control is timing down and the power supply is interrupted for any reason, the control will not reset to the original cook cycle time. When power is restored, the control will resume timing at the point the power was interrupted, allowing the operator to know what time is needed to finish cooking that particular load of product.

BOIL OUT MODE

The unit has a boil out mode which is factory pre-programmed. To enter the boil out mode, follow the instructions below.

1. Place keyswitch in the COOK position.
2. Depress the SELECT PRODUCT switch and select either IDLE or MELT.
3. Depress the TIMER switch.
4. Display will read Y for yes or N for no.
5. If you desire to enter the boil out mode, depress the switch below Y. Control will heat to factory's pre-programmed boil out temperature.
6. If, for any reason, you do not wish to enter boil out mode, depress the switch under N.
7. After boil out is complete, turn power switch to the OFF position and drain contents from unit.

NEVER PRESSURIZE FRYER TO CLEAN. Leave lid open. Water under pressure is super heated and will cause severe burns if it comes in contact with skin.

BASIC OPERATION

1. Be sure keyswitch is in the COOK position.
2. Turn the power switch to the cook position.
3. Select desired product using the SELECT PRODUCT switch. The red indicator will be illuminated beside product.
4. Be sure ready light is illuminated indicating pot temperature is up to setpoint temperature.
5. Place the empty basket into the shortening.
6. Place the product into the submerged basket, large pieces first.
7. Lift the basket slightly out of the shortening and shake it. This will cause the pieces to separate, eliminating white spots.
8. Remove basket handle. Close and latch the lid.
9. Tighten spindle in clockwise rotation aligning red ball on the spindle with red ball on lid latch.
10. Depress timer switch. This will start the cook cycle and countdown of timer.
11. At the end of the cook cycle the DONE light will illuminate and the buzzer will sound.
12. Depress timer switch to turn buzzer off.
13. After all pressure has been released, (pressure gauge reads 0) turn lid spindle counterclockwise as far as possible and open lid.
14. Insert basket handle, lift basket out of shortening and rest the basket on the side of pot rim to allow product to drain.
15. Place product on bun pan and place in holding cabinet.

FOOD PREPARATION AND COOKING PROCEDURES

The food preparation procedures, cooking times, temperatures and other parameter settings provided are suggestions to be used as starting points when establishing your specific cooking procedures.

Parameter settings for time, temperature, alarm, pressure, load compensation, load anticipation, PC factor and filter cycle may need to be adjusted to produce food products more suitable for your application.

PRODUCT: Chicken, 8 or 9 piece cut.
SIZE: 2-1/4 to 2-3/4 pounds each*.
TOTAL WEIGHT: 2 — 14 pounds, approximately 1 — 4 head of chicken.
PREPARATION: Please refer to section on cut-up fried chicken.

*Increase time to 11:30 or load compensation to 9 or 10 if frying 2-3/4 — 3 pound chickens. Do not exceed 4 head.

INTERVALS

FUNCTION	1	2	3	4	5	6	7	8	9	10
TIME	10:30									
TEMP.	325									
ALARM										
PRESSURE	ON									
LOAD COMP.	7									
LOAD ANT.	5									
PC FACTOR	15									
FIL CYCLE	4									

NOTES: Set load compensation from 7 — 10 if individual size of chickens varies or if total weight of loads varies from 2 — 14 pounds (1 — 4 head). Set load compensation at 5 or less if total weight of load and individual size of chickens is consistent or seldom varies.

PRODUCT: Chicken nuggets (frozen).
TOTAL WEIGHT: 2 — 6 pounds*.

*Do not cook larger loads as nuggets will tend to stick together.

INTERVALS

FUNCTION	1	2	3	4	5	6	7	8	9	10
TIME	4:00									
TEMP.	325									
ALARM										
PRESSURE	ON									
LOAD COMP.	7									
LOAD ANT.	5									
PC FACTOR	15									
FIL CYCLE	4									

NOTES: _____

_____

_____

_____

PRODUCT: Chicken breast fillets.
SIZE: 3 — 4 ounces each.
QUANTITY: 1 — 22 fillets.
PREPARATION: 1. Wash and drain.
2. Bread with Henny Penny Fryer Mix or marinate and bread.

INTERVALS

FUNCTION	1	2	3	4	5	6	7	8	9	10
TIME	4:15									
TEMP.	320									
ALARM										
PRESSURE	ON									
LOAD COMP.	6									
LOAD ANT.	5									
PC FACTOR	15									
FIL CYCLE	4									

NOTES: _____

PRODUCT: Chicken gizzards.
TOTAL WEIGHT: 2 — 3 pounds.

INTERVALS

FUNCTION	1	2	3	4	5	6	7	8	9	10
TIME	12:00	11:00								
TEMP.	330	255								
ALARM		OFF								
PRESSURE	ON	ON								
LOAD COMP.	5									
LOAD ANT.	5									
PC FACTOR	15									
FIL CYCLE	1									

NOTES: _____

PRODUCT: Chicken gizzards.
TOTAL WEIGHT: 5 — 10 pounds.
PREPARATION: 1. Wash and drain.
2. Bread with Henny Penny Fryer Mix or marinate and bread.

INTERVALS

FUNCTION	1	2	3	4	5	6	7	8	9	10
TIME	21:00	20:00								
TEMP.	330	255								
ALARM		OFF								
PRESSURE	ON	ON								

LOAD COMP.	5
LOAD ANT.	5
PC FACTOR	15
FIL CYCLE	1

NOTES: _____

PRODUCT: Chicken livers.
TOTAL WEIGHT: 2 — 6 pounds.
PREPARATION: 1. Wash and drain.
2. Bread with Henny Penny Fryer Mix or marinate and bread.

INTERVALS

FUNCTION	1	2	3	4	5	6	7	8	9	10
TIME	7:30	6:30								
TEMP.	330	255								
ALARM		OFF								
PRESSURE	ON	ON								

LOAD COMP.	5
LOAD ANT.	5
PC FACTOR	15
FIL CYCLE	1

NOTES: _____

PRODUCT: Chicken livers.
TOTAL WEIGHT: 10 pounds.

INTERVALS

FUNCTION	1	2	3	4	5	6	7	8	9	10
TIME	14:00	12:45								
TEMP.	330	265								
ALARM		OFF								
PRESSURE	ON	ON								
LOAD COMP.	5									
LOAD ANT.	5									
PC FACTOR	15									
FIL CYCLE	1									

NOTES: Make sure pieces are well separated when returning basket to shortening. Frying 2 five pound loads may produce a better product.

PRODUCT: Potatoes — U.S. No. 1 Grade Idaho
SIZE: 90 — 100 count.
TOTAL WEIGHT: 1 — 10 pounds.
PREPARATION:
1. Wash, and remove any sprouts. Do not peel.
2. Cut into 8 wedges.
3. Bread with Henny Penny fryer mix.

INTERVALS

FUNCTION	1	2	3	4	5	6	7	8	9	10
TIME	7:00									
TEMP.	325									
ALARM										
PRESSURE	ON									
LOAD COMP.	8									
LOAD ANT.	5									
PC FACTOR	15									
FIL CYCLE	4									

NOTES: _____

PRODUCT: Fish fillets (fresh).
SIZE: 3 — 4 ounces each.
TOTAL WEIGHT: 1 — 5 pounds.
PREPARATION: 1. Clean, wash and drain.
2. Bread with Henny Penny fryer mix or marinate and bread.

INTERVALS

FUNCTION	1	2	3	4	5	6	7	8	9	10
TIME	3:30									
TEMP.	315									
ALARM										
PRESSURE	ON									
LOAD COMP.	5									
LOAD ANT.	5									
PC FACTOR	20									
FIL CYCLE	4									

NOTES: _____

PRODUCT: Cauliflower.
QUANTITY: 1 — 5 large heads.
PREPARATION: 1. Clean, rinse and drain.
2. Slice into 1 inch pieces.
3. Bread.

INTERVALS

FUNCTION	1	2	3	4	5	6	7	8	9	10
TIME	2:00									
TEMP.	315									
ALARM										
PRESSURE	ON									
LOAD COMP.	5									
LOAD ANT.	5									
PC FACTOR	15									
FIL CYCLE	4									

NOTES: _____

PRODUCT: Mushrooms.
TOTAL WEIGHT: 1 — 6 pounds.
PREPARATION:
1. Wash and drain.
2. Slice large mushrooms in half.
   Leave medium and small mushrooms whole.
3. Bread.

INTERVALS

FUNCTION	1	2	3	4	5	6	7	8	9	10
TIME	2:00									
TEMP.	315									
ALARM										
PRESSURE	ON									
LOAD COMP.	5									
LOAD ANT.	5									
PC FACTOR	15									
FIL CYCLE	4									

NOTES: _____

PRODUCT: Polish sausage or kielbasa.
TOTAL WEIGHT: 1 — 5 pounds.
PREPARATION: Slice into 2 inch chunks.

INTERVALS

FUNCTION	1	2	3	4	5	6	7	8	9	10
TIME	2:00									
TEMP.	315									
ALARM										
PRESSURE	ON									
LOAD COMP.	5									
LOAD ANT.	5									
PC FACTOR	15									
FIL CYCLE	6									

NOTES: _____

PRODUCT: Corn dogs (frozen).
TOTAL WEIGHT: 5 pounds or approximately 27 corn dogs.

INTERVALS

FUNCTION	1	2	3	4	5	6	7	8	9	10
TIME	10:30									
TEMP.	315									
ALARM										
PRESSURE	ON									
LOAD COMP.	5									
LOAD ANT.	5									
PC FACTOR	20									
FIL CYCLE	3									

NOTES: If cooking a thawed or fresh corn dog, fry for 3-1/2 minutes at 315-325°F.

PRODUCT: Egg rolls (fully cooked, frozen).
SIZE: 1.5 ounces each.
TOTAL WEIGHT: 2.5 — 6.5 pounds or approximately 24 — 72 egg rolls.
PREPARATION: 1. Thaw if frozen.
2. Fry at 315 or 320°F.

INTERVALS

FUNCTION	1	2	3	4	5	6	7	8	9	10
TIME	3:00									
TEMP.	320									
ALARM										
PRESSURE	ON									
LOAD COMP.	7									
LOAD ANT.	5									
PC FACTOR	15									
FIL CYCLE	2									

NOTES: _____

TROUBLESHOOTING

This section provides troubleshooting information in the form of an easy to read guide. Clearly define the problem and review all possible causes.

WARNING

The following guide requires voltage to be present when troubleshooting the control. When the guide refers to connecting pins on the power connector, unplug the power connector from the board and refer to the attached illustration. These are numbered 1 through 9. Using a strand of #16 gauge wire, connect the pins as numbered in the troubleshooting guide. Extreme caution must be taken when connecting these pins to avoid control board damage or electrical shock.

Problem	Correction
With switch in COOK position, the fryer is completely inoperative (no power switch light).	• Check to see if unit has voltage • Check fuses • Defective power switch
With switch in COOK position, the fryer is completely inoperative (power switch light on, pump works)	• Check voltage on pins 1 and 7 on power connector, 10 VAC • If voltage is present, check fuse on control board • If fuse is defective, replace fuse • If fuse is good, replace control board
Control operative - all lights on - primary contactor engages - no heat or pressure	• Drain Valve Open • Defective Drain Switch
Control operative - all lights on - no heat or pressure - primary contactor does NOT engage	• Check 5 amp fuse located on heat shroud - fuse OK • Check voltage from center of fuse to ground - 24 VAC • Defective transformer
Control operative - all lights on - has pressure - **No** heat	• Connect pins 4 and 6 on the power connector • If contactor engages - replace control board • If contactor does **not** engage, replace contactor
Control operative - all lights on - heat on - no pressure - pressure light ON.	• Connect pins 3 and 6 on the power connector • If solenoid engages - defective control board If solenoid does **not** engage - defective solenoid coil - 24 VAC
Control operative - all lights on - heat on - no pressure - pressure light OFF	• Check programming

Problem	Correction
Error message E-5 display reads HI	• Cool shortening down • Read display temperature - if display temperature reads HI, unplug power connector from control board. If secondary contactor stays engaged, change contactor - if secondary contactor disengages, change control board If shortening temperature reads normal - defective thermal sensor - replace
Error message E-6	• Defective thermal sensor • Replace thermal sensor
Error message E-10	• Reset manual high limit thermostat
Error message E-41	• Depress timer switch • Control must be completely reprogrammed

POWER CONNECTOR FROM UNIT TO CONTROL BOARD

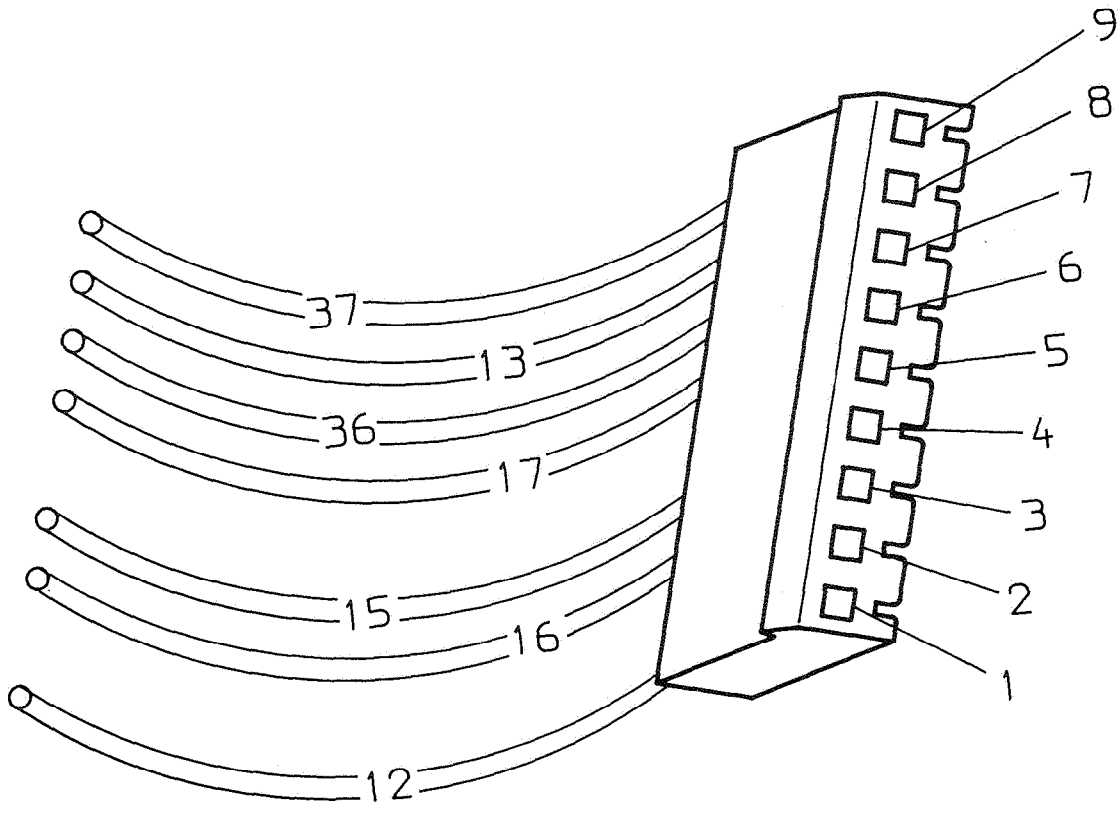

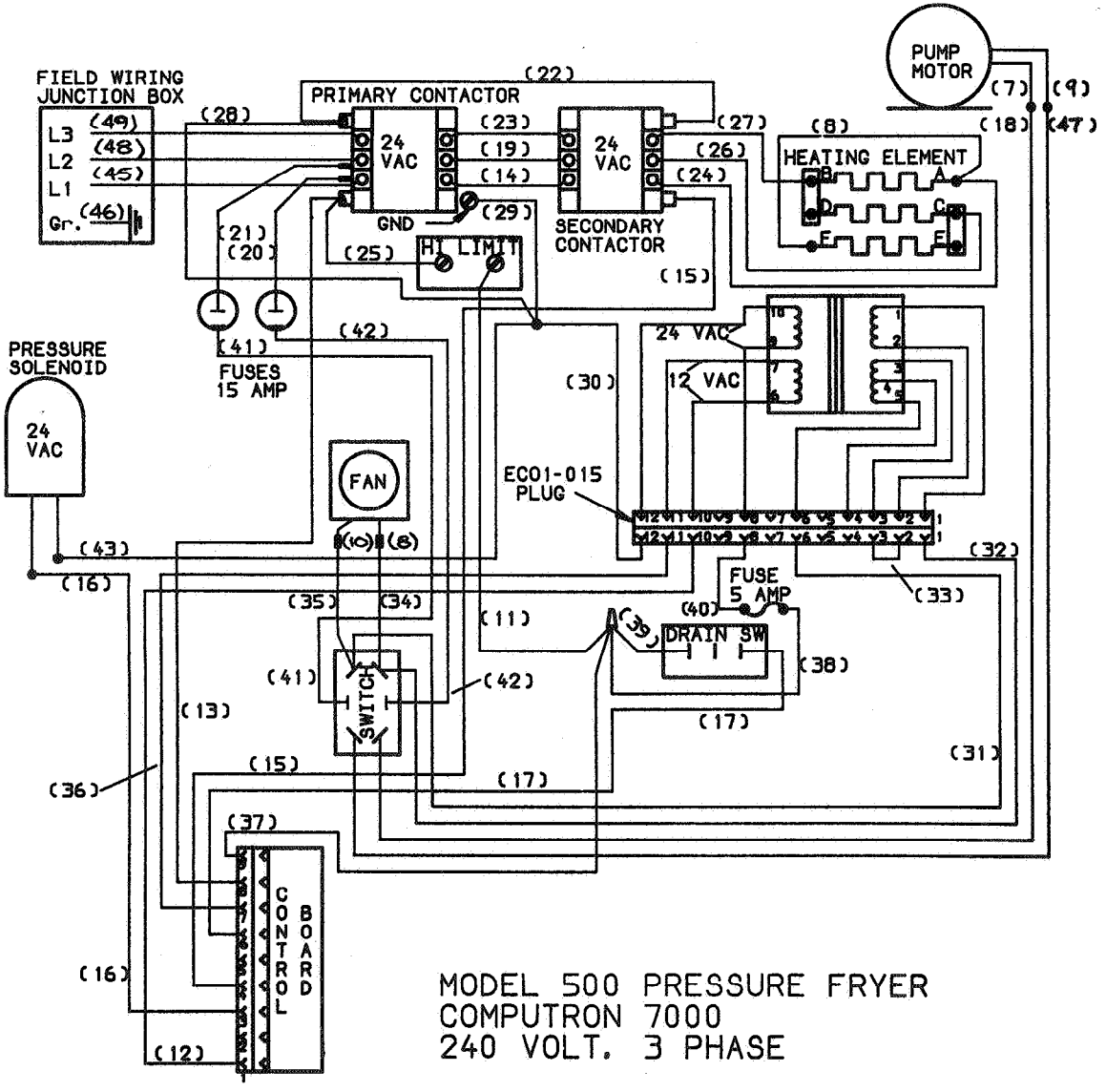

MODEL 500 PRESSURE FRYER
COMPUTRON 7000
240 VOLT. 3 PHASE

29540

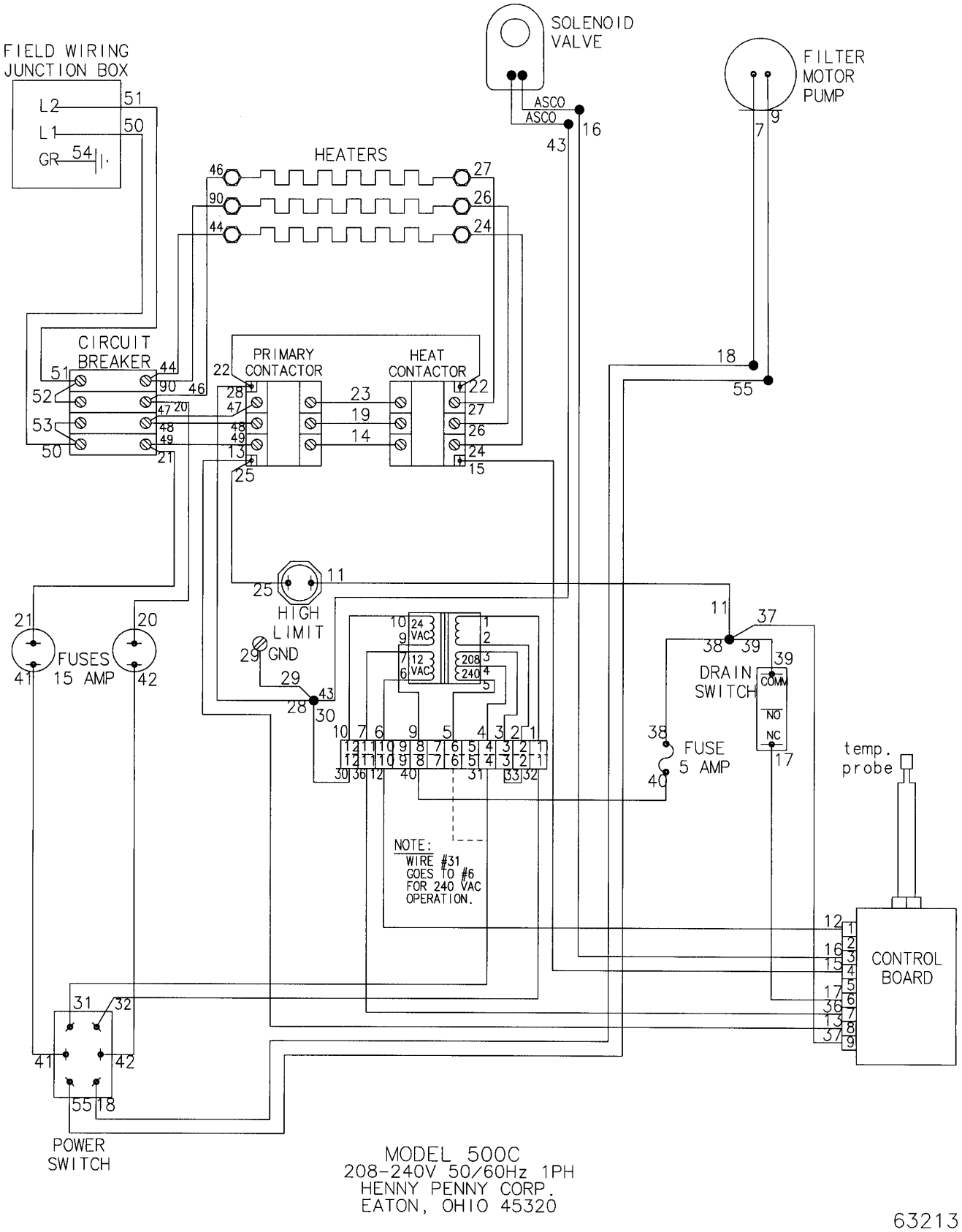
FIELD WIRING
JUNCTION BOX
L2
L1
GR
SOLENOID
VALVE
ASCO
ASCO
FILTER
MOTOR
PUMP
HEATERS
CIRCUIT
BREAKER
PRIMARY
CONTACTOR
HEAT
CONTACTOR
HIGH
LIMIT
GND
FUSES
15 AMP
24
VAC
12
VAC
208
240
DRAIN
SWITCH
COMM
NO
NC
FUSE
5 AMP
temp.
probe
NOTE:
WIRE #31
GOES TO #6
FOR 240 VAC
OPERATION.
CONTROL
BOARD
POWER
SWITCH
MODEL 500C
208-240V 50/60Hz 1PH
HENNY PENNY CORP.
EATON, OHIO 45320
63213

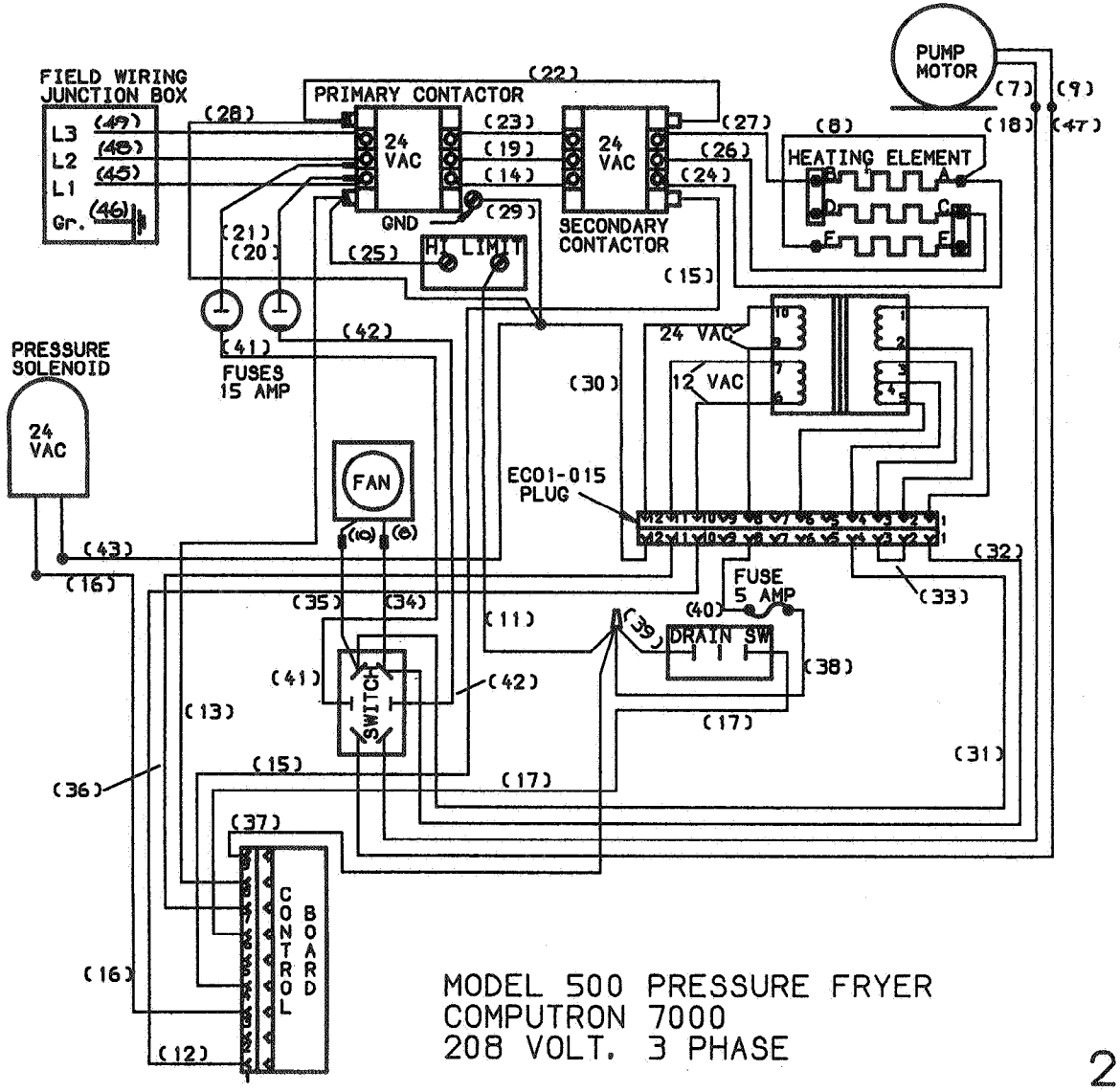

MODEL 500 PRESSURE FRYER
COMPUTRON 7000
208 VOLT, 3 PHASE

29556

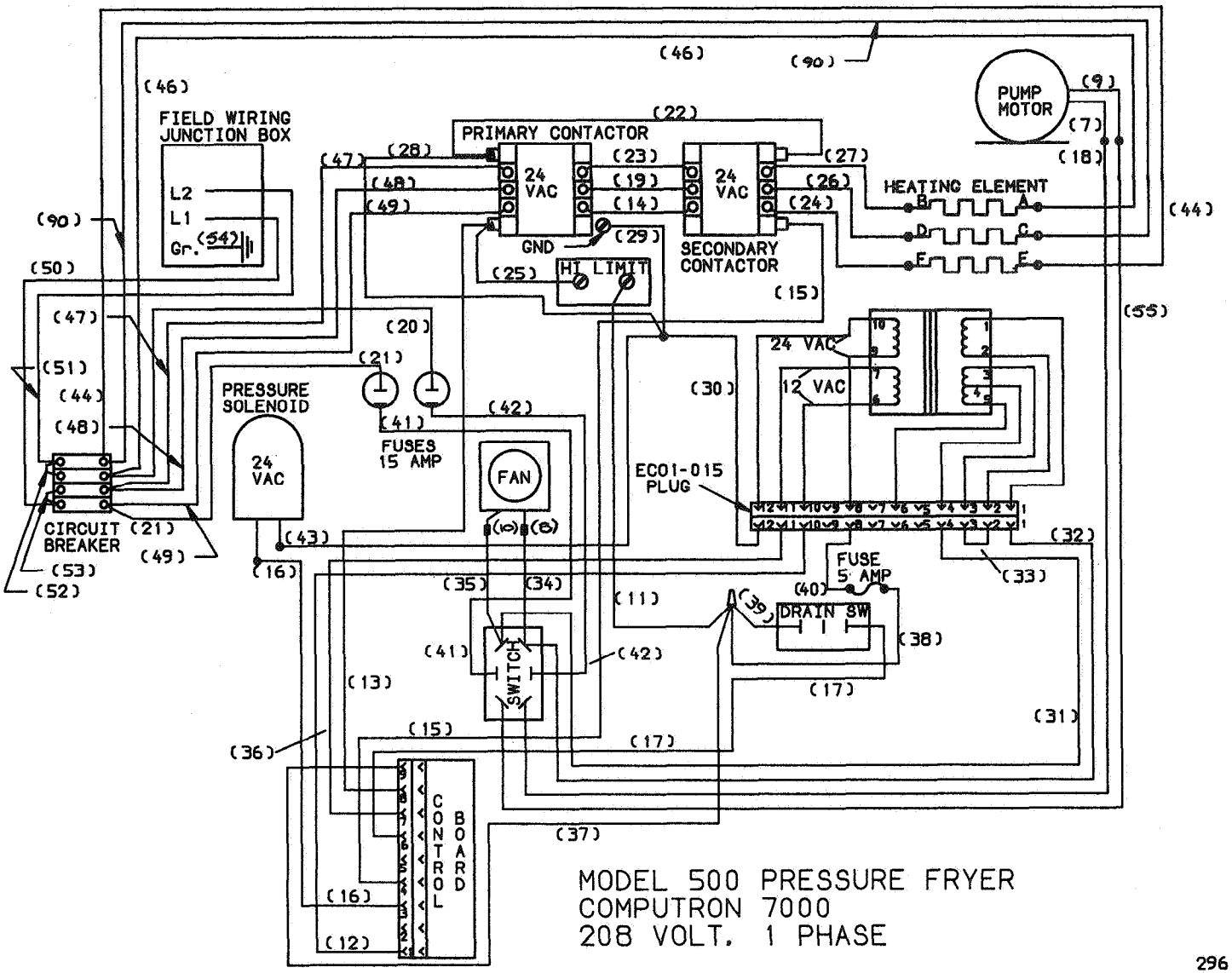

MODEL 500 PRESSURE FRYER
COMPUTRON 7000
208 VOLT. 1 PHASE

29617

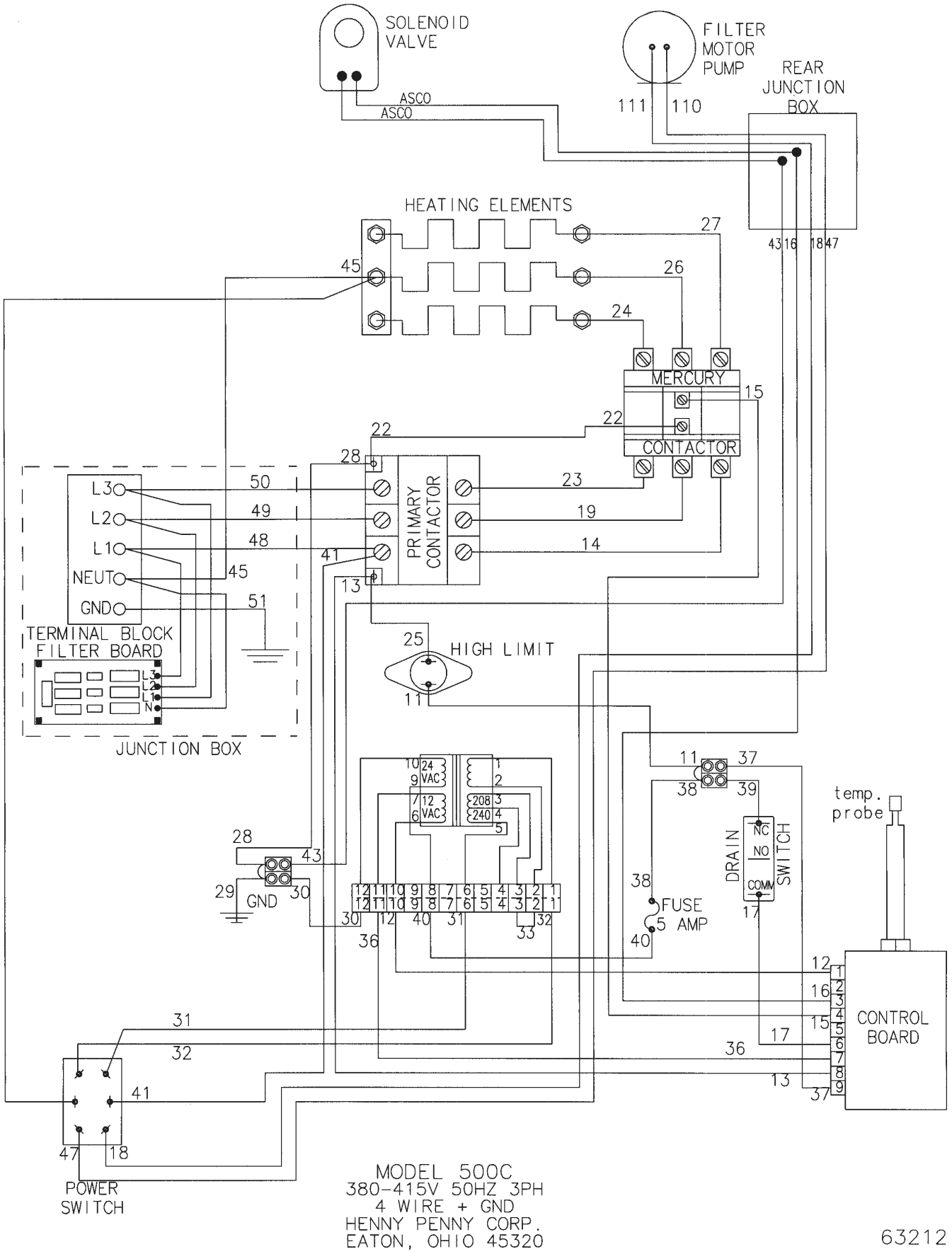
SOLENOID VALVE
ASCO
ASCO
FILTER MOTOR PUMP
111
110
REAR JUNCTION BOX
4316
1847
HEATING ELEMENTS
27
45
26
24
MERCURY
15
22
22
CONTACTOR
28
PRIMARY CONTACTOR
23
19
14
L3
L2
L1
NEUT
GND
50
49
48
45
51
41
13
TERMINAL BLOCK FILTER BOARD
JUNCTION BOX
25
HIGH LIMIT
11
24 VAC
12 VAC
208
240
11
37
38
39
temp. probe
DRAIN SWITCH
NC
NO
COMM
17
38
FUSE 5 AMP
40
28
43
29
GND
30
30
12
40
31
32
36
33
12
16
15
17
36
13
37
CONTROL BOARD
31
32
41
47
18
POWER SWITCH
MODEL 500C
380-415V 50HZ 3PH
4 WIRE + GND
HENNY PENNY CORP.
EATON, OHIO 45320
63212

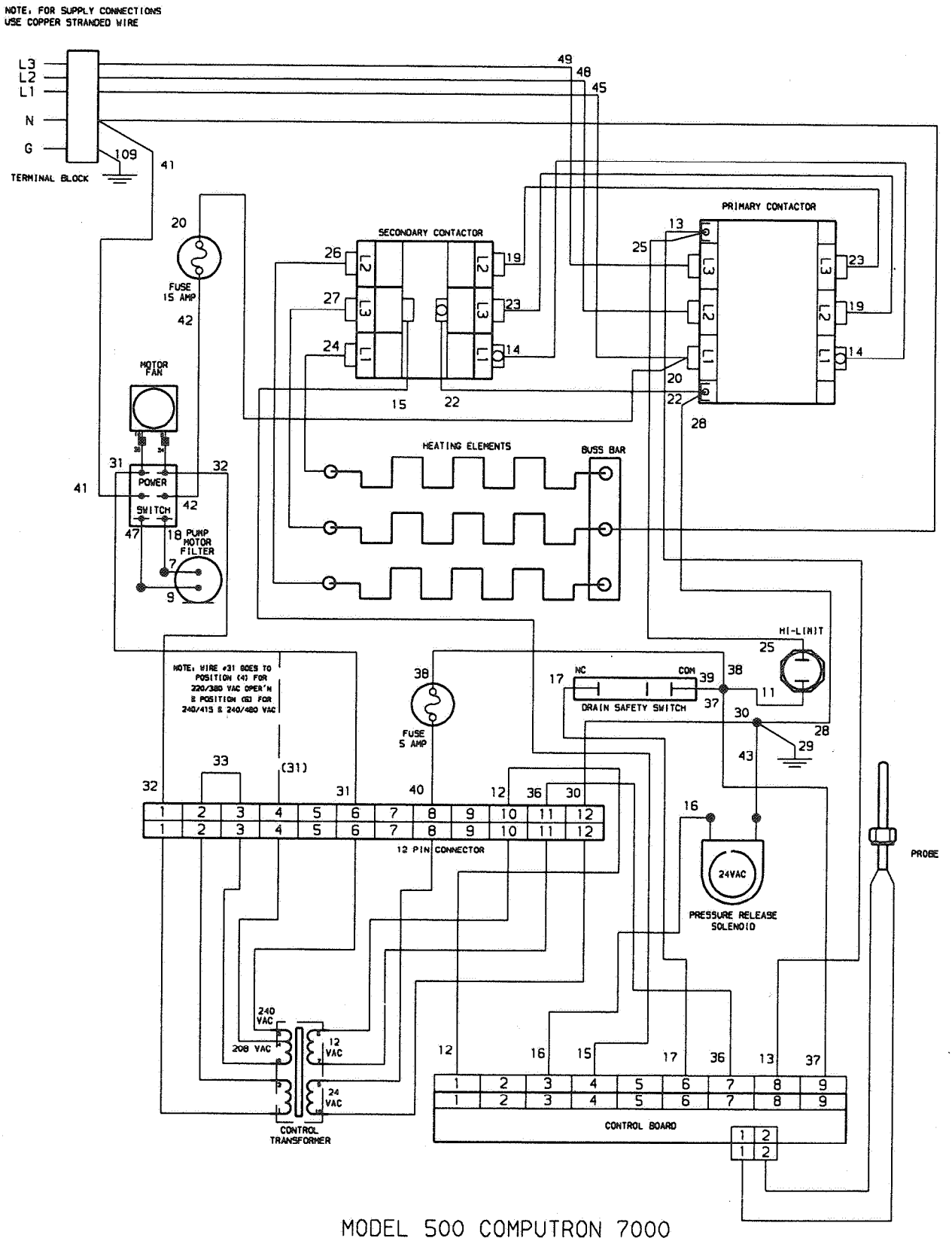

MODEL 500 COMPUTRON 7000
220/380 OR 240/415 VAC 3PH
50/60 HZ 4 POLE, 5 WIRE

29572

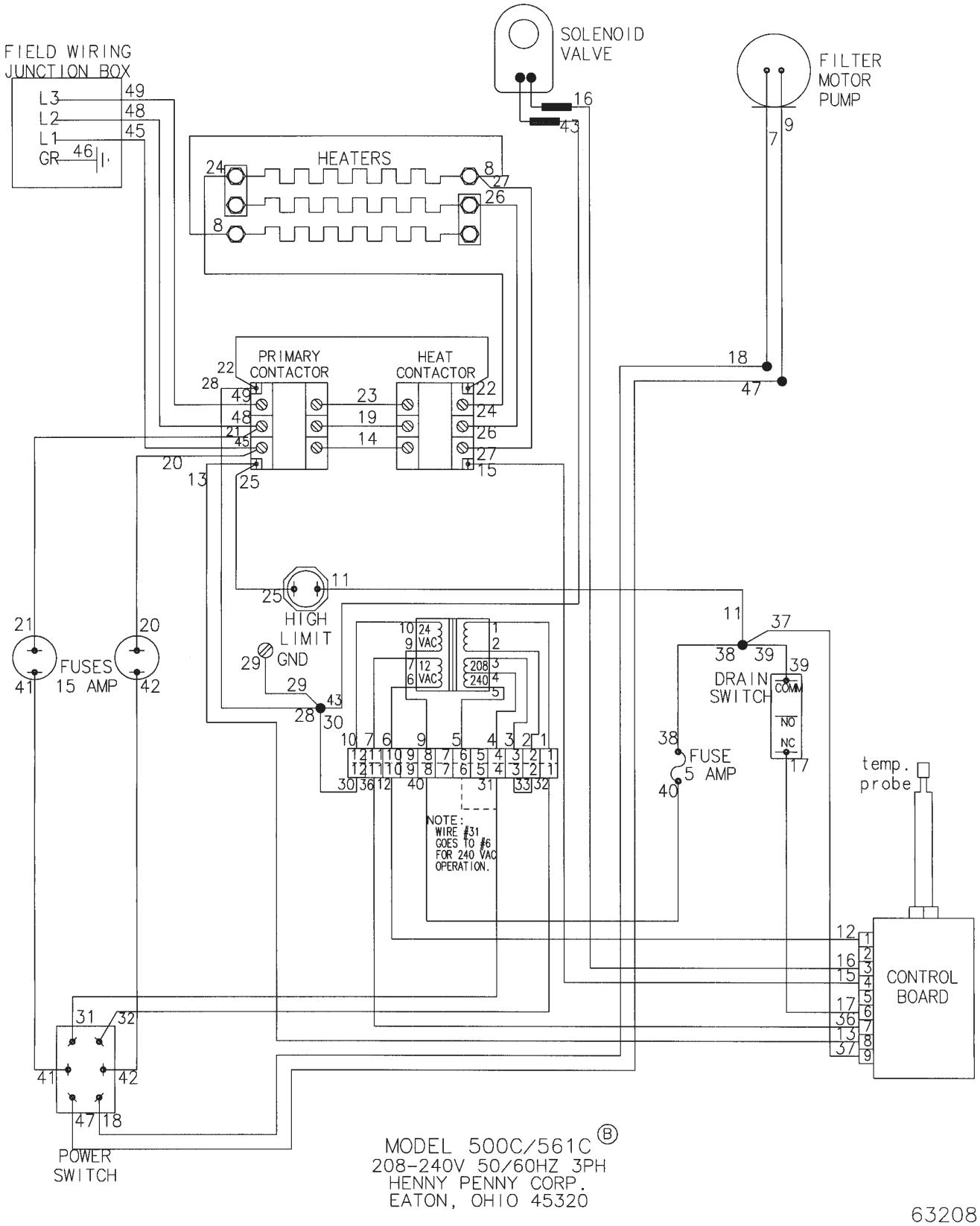
FIELD WIRING
JUNCTION BOX
L3
L2
L1
GR
SOLENOID
VALVE
FILTER
MOTOR
PUMP
HEATERS
PRIMARY
CONTACTOR
HEAT
CONTACTOR
HIGH
LIMIT
GND
FUSES
15 AMP
24
VAC
12
VAC
208
240
DRAIN
SWITCH
COMM
NO
NC
FUSE
5 AMP
temp.
probe
CONTROL
BOARD
NOTE:
WIRE #31
GOES TO #6
FOR 240 VAC
OPERATION.
POWER
SWITCH
MODEL 500C/561C Ⓑ
208-240V 50/60HZ 3PH
HENNY PENNY CORP.
EATON, OHIO 45320
63208

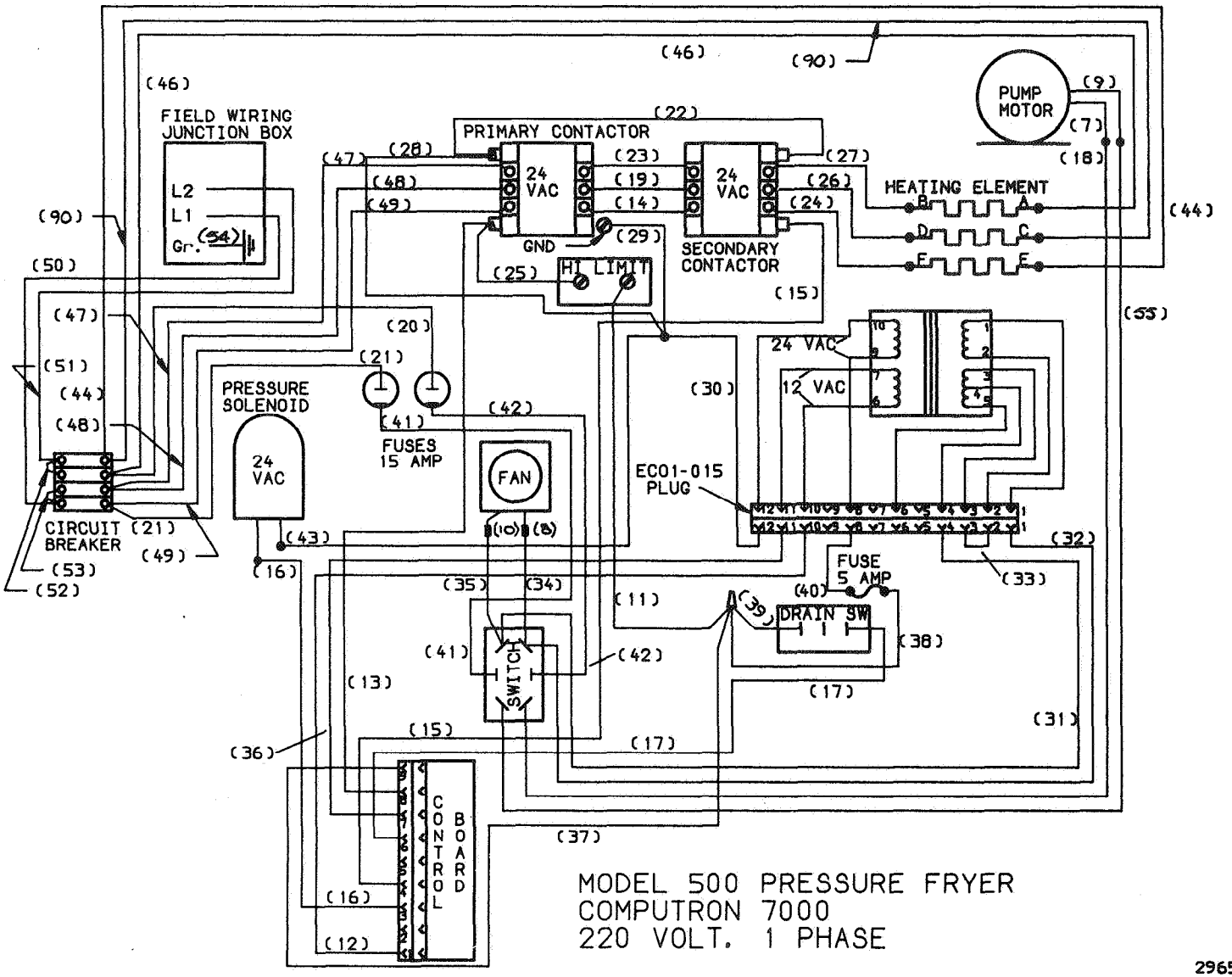

MODEL 500 PRESSURE FRYER
COMPUTRON 7000
220 VOLT. 1 PHASE

29658

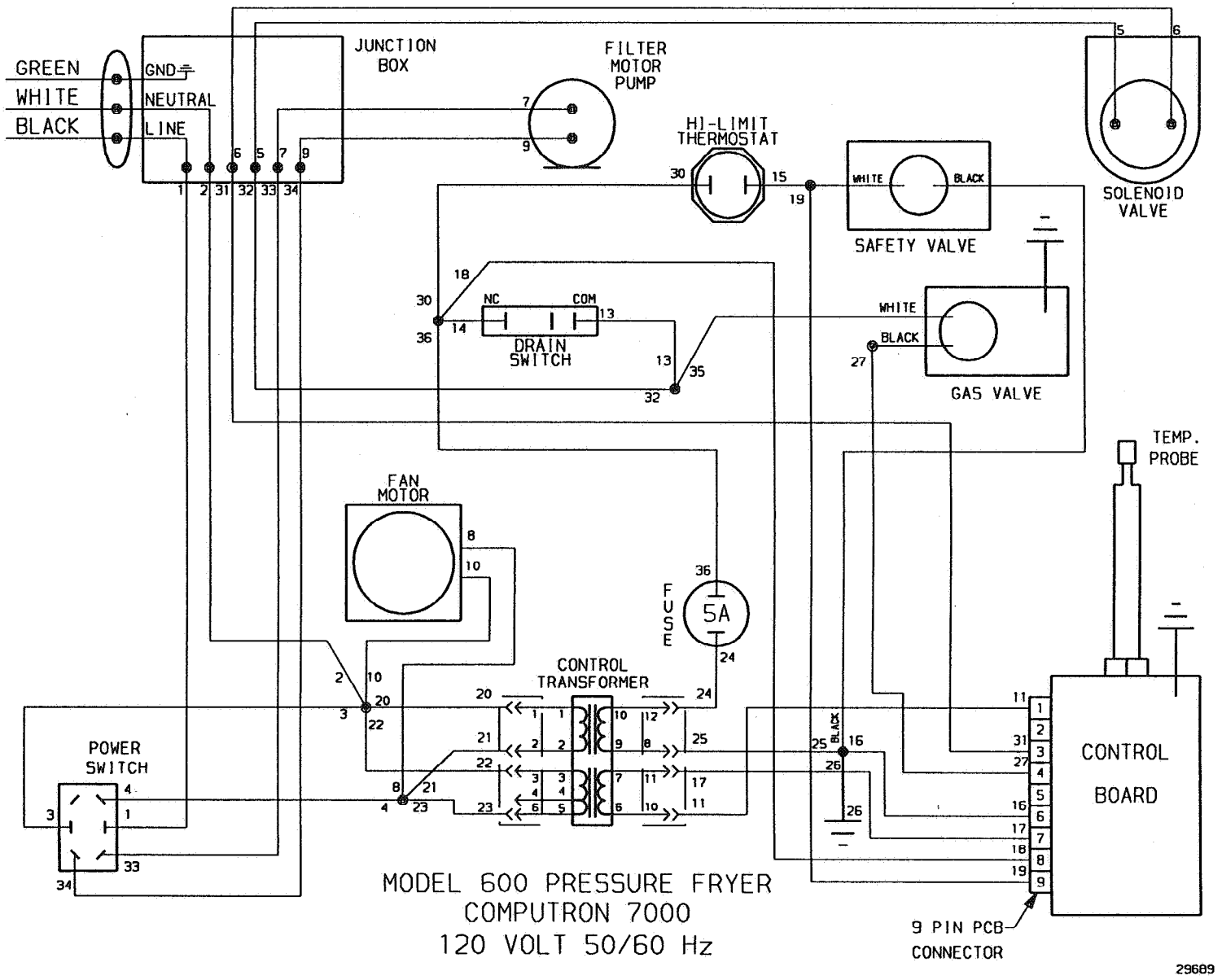
GREEN
WHITE
BLACK
GND
NEUTRAL
LINE
JUNCTION BOX
FILTER MOTOR PUMP
HI-LIMIT THERMOSTAT
SAFETY VALVE
SOLENOID VALVE
WHITE
BLACK
NC
COM
DRAIN SWITCH
GAS VALVE
TEMP. PROBE
FAN MOTOR
FUSE
5A
CONTROL TRANSFORMER
POWER SWITCH
CONTROL BOARD
9 PIN PCB CONNECTOR
MODEL 600 PRESSURE FRYER
COMPUTRON 7000
120 VOLT 50/60 Hz
29689

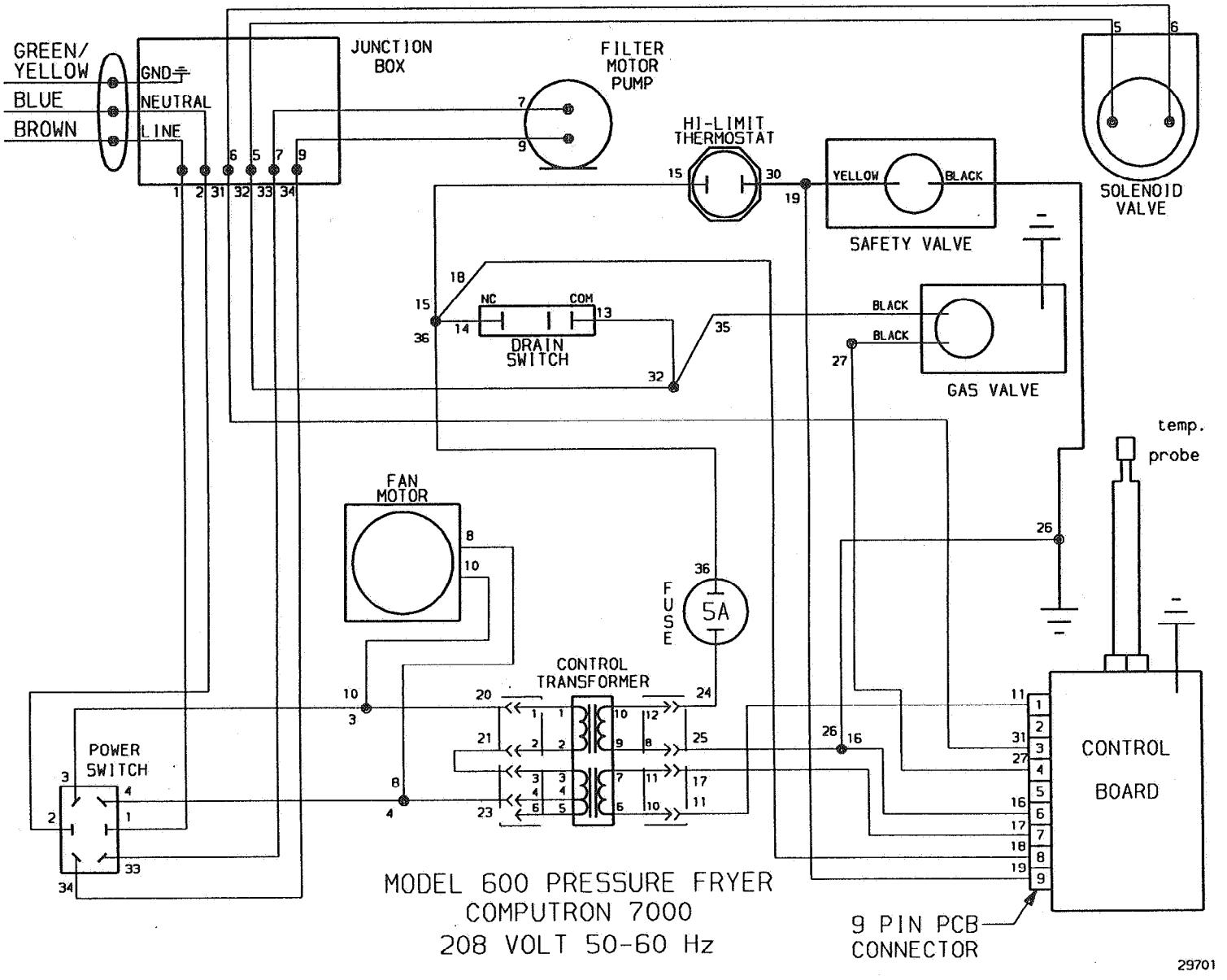

MODEL 600 PRESSURE FRYER
COMPUTRON 7000
208 VOLT 50-60 Hz

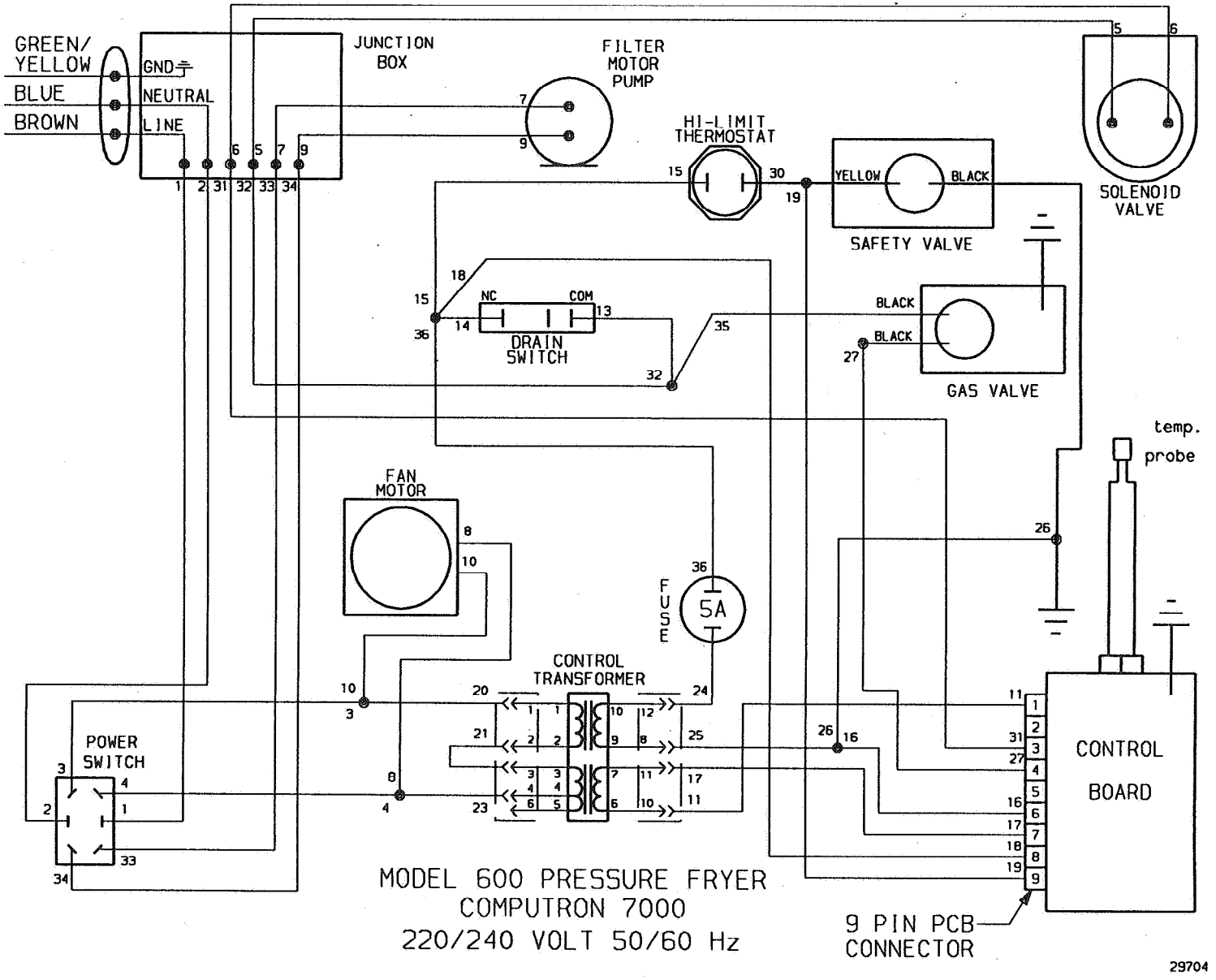
GREEN/
YELLOW
BLUE
BROWN
GND
NEUTRAL
LINE
JUNCTION
BOX
FILTER
MOTOR
PUMP
HI-LIMIT
THERMOSTAT
YELLOW
BLACK
SAFETY VALVE
SOLENOID
VALVE
NC
COM
DRAIN
SWITCH
BLACK
BLACK
GAS VALVE
temp.
probe
FAN
MOTOR
FUSE
5A
CONTROL
TRANSFORMER
POWER
SWITCH
CONTROL
BOARD
9 PIN PCB
CONNECTOR
MODEL 600 PRESSURE FRYER
COMPUTRON 7000
220/240 VOLT 50/60 Hz
29704

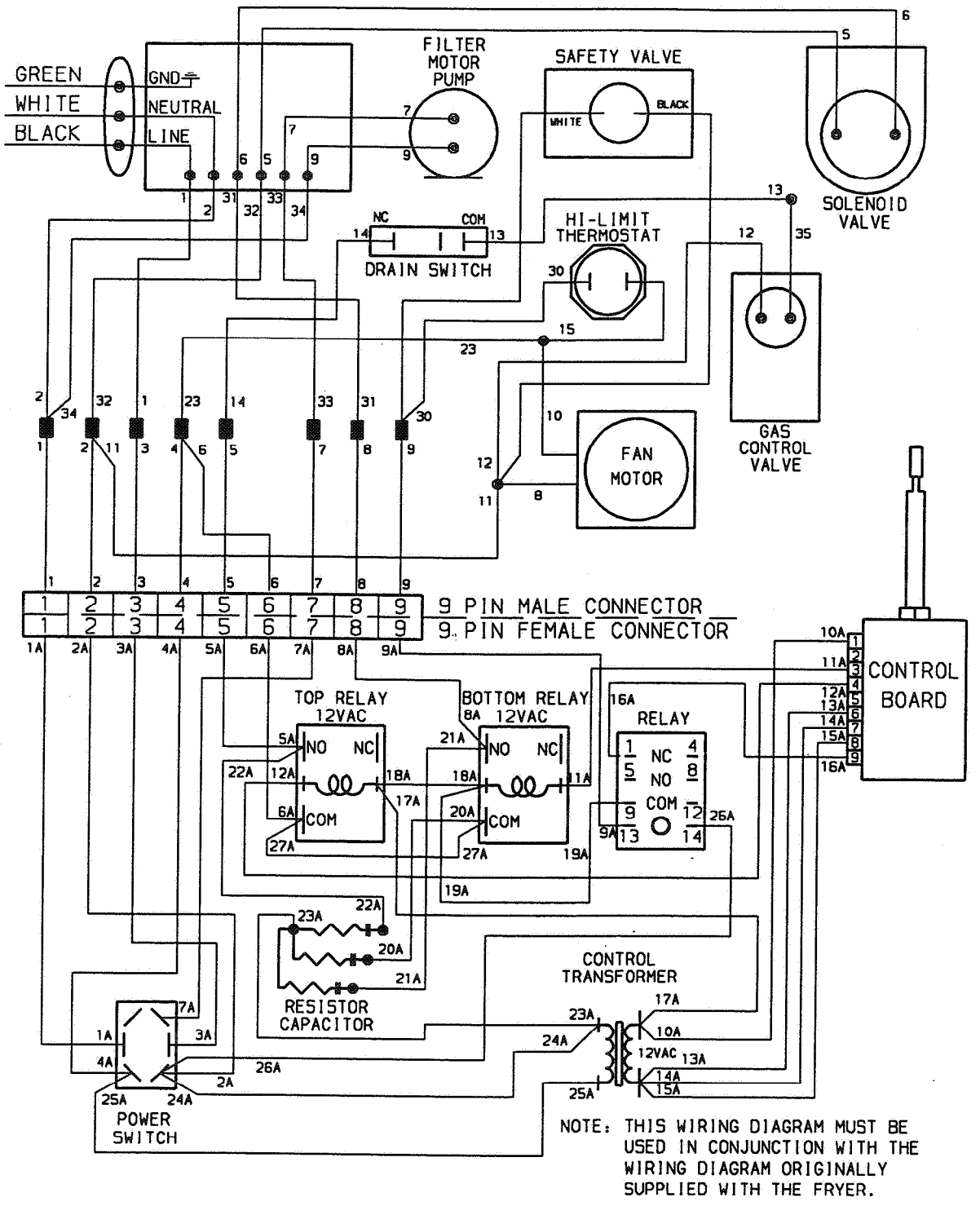

NOTE: THIS WIRING DIAGRAM MUST BE USED IN CONJUNCTION WITH THE WIRING DIAGRAM ORIGINALLY SUPPLIED WITH THE FRYER.

■ = FIELD CONNECTION

MODEL RG-600 GAS FRYER
100V - 208V - 220V - 240V
50/60 HZ WITH GAS SAFETY VALVE

34436

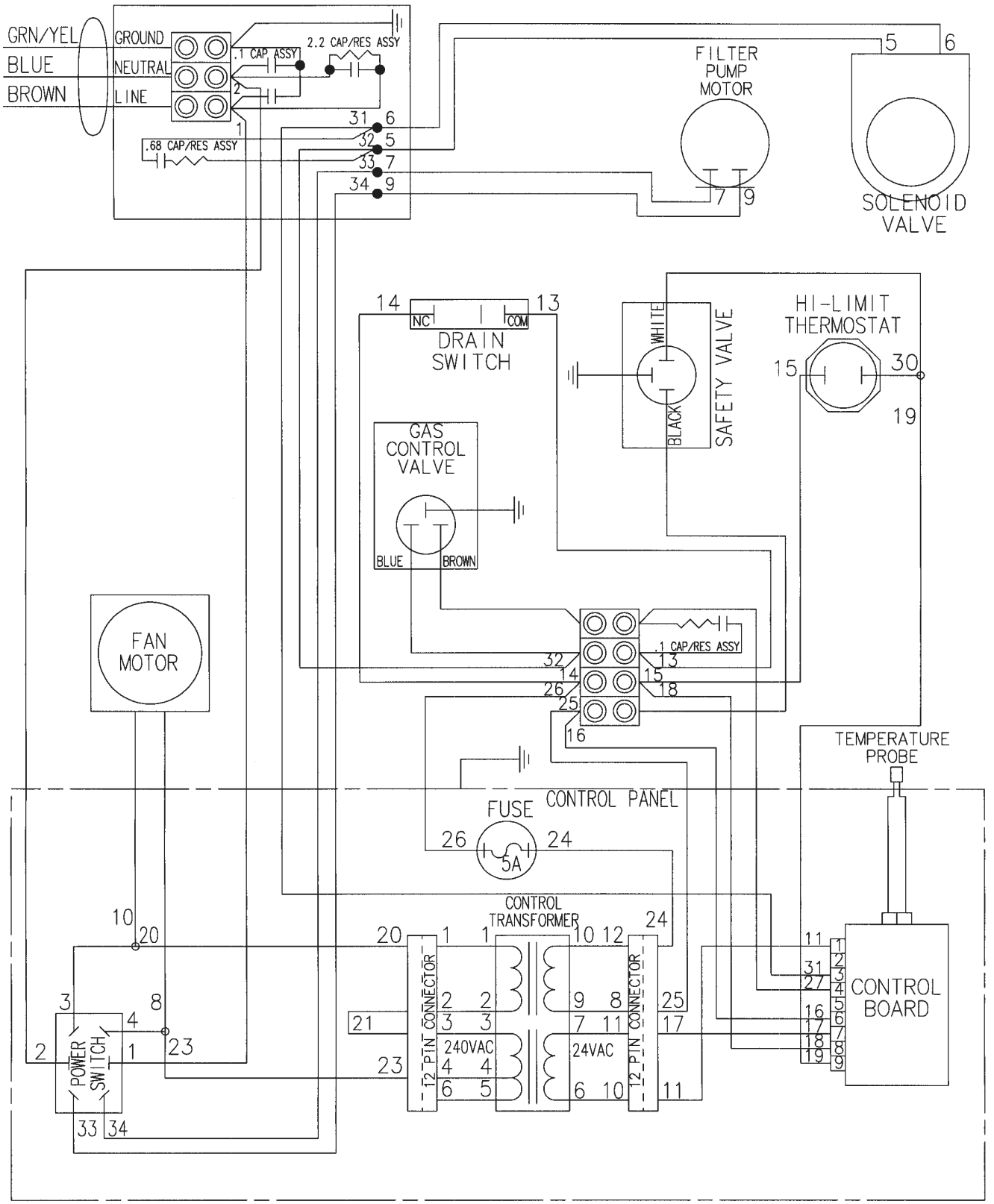

MODEL 600C GAS FRYER
230V 50HZ 1PH
HENNY PENNY CORP., EATON, OHIO 45320

34808

NOTE: FOR SUPPLY CONNECTIONS
USE COPPER STRANDED WIRE.

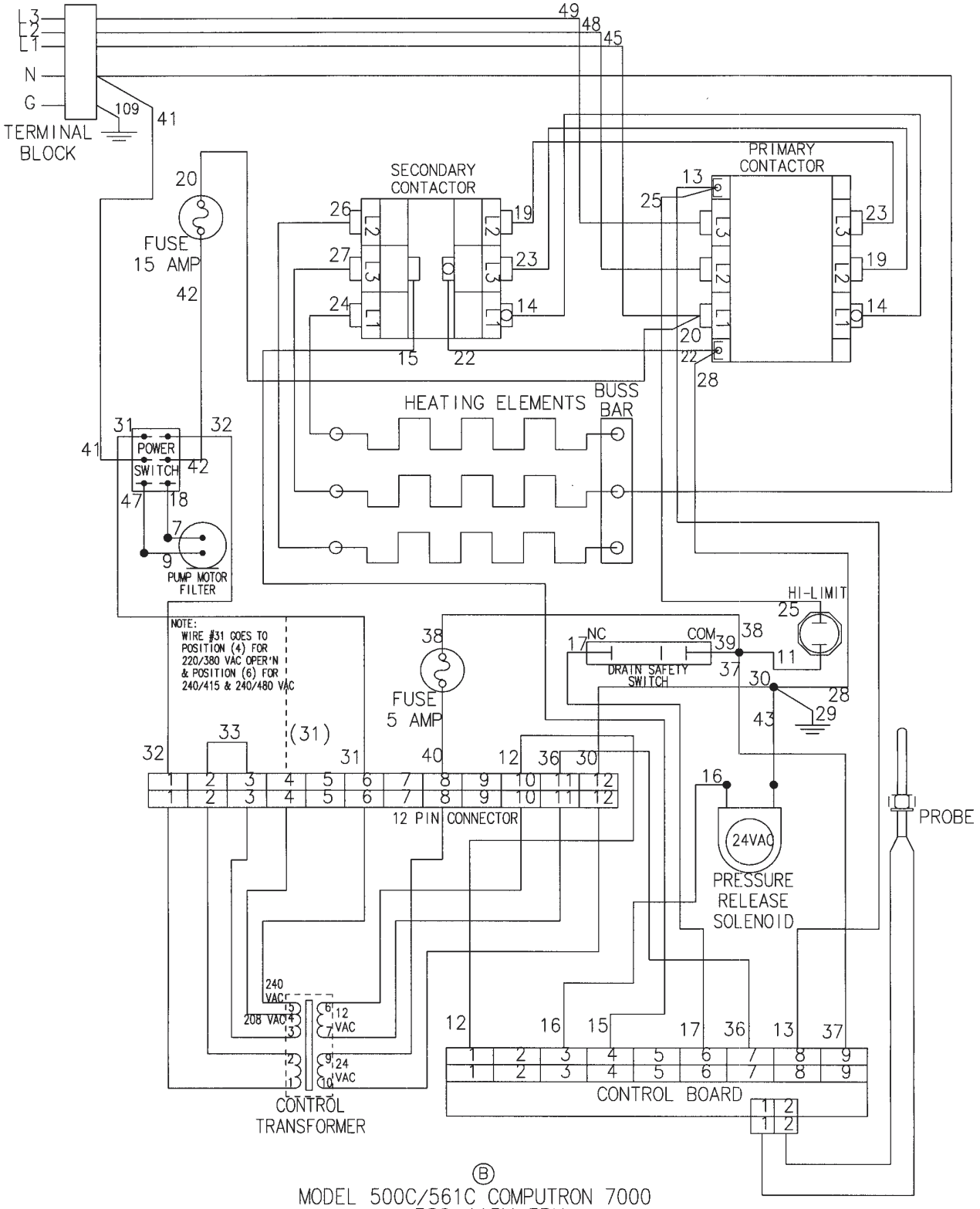

Ⓑ
MODEL 500C/561C COMPUTRON 7000
380-415V 3PH
50/60HZ 4W+G
HENNY PENNY CORP.
EATON, OHIO 45320

63206

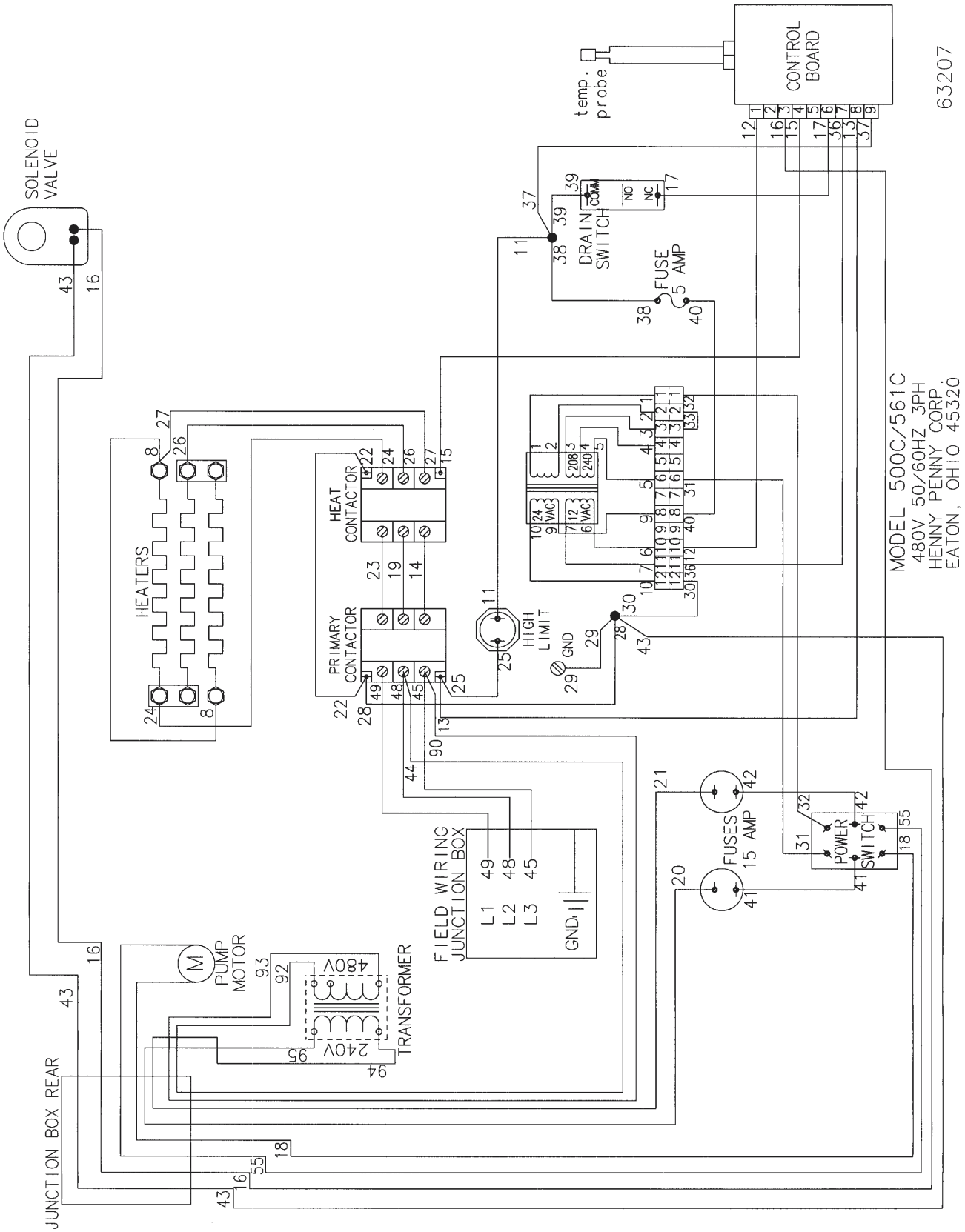
SOLENOID VALVE
CONTROL BOARD
temp. probe
63207
DRAIN SWITCH
COM
NO
NC
FUSE 5 AMP
HEATERS
HEAT CONTACTOR
PRIMARY CONTACTOR
HIGH LIMIT
GND
24 VAC
12 VAC
208
240
MODEL 500C/561C
480V 50/60HZ 3PH
HENNY PENNY CORP.
EATON, OHIO 45320
FUSES 15 AMP
POWER SWITCH
FIELD WIRING JUNCTION BOX
L1 49
L2 48
L3 45
GND
PUMP MOTOR
M
TRANSFORMER
480V
240V
JUNCTION BOX REAR

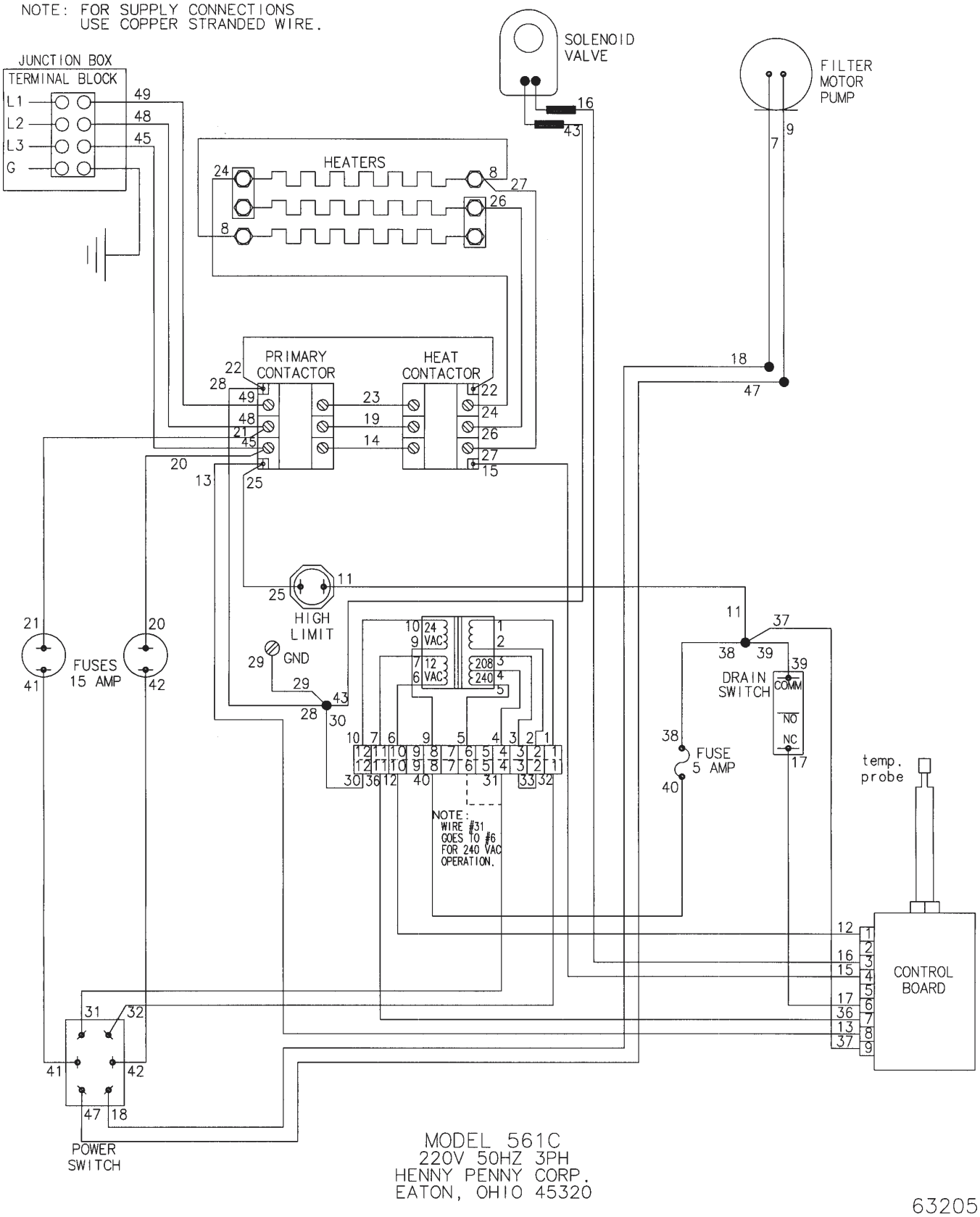
NOTE: FOR SUPPLY CONNECTIONS
USE COPPER STRANDED WIRE.
JUNCTION BOX
TERMINAL BLOCK
L1
L2
L3
G
SOLENOID VALVE
FILTER MOTOR PUMP
HEATERS
PRIMARY CONTACTOR
HEAT CONTACTOR
HIGH LIMIT
GND
FUSES 15 AMP
24 VAC
12 VAC
208
240
DRAIN SWITCH
COMM
NO
NC
FUSE 5 AMP
temp. probe
CONTROL BOARD
NOTE: WIRE #31 GOES TO #6 FOR 240 VAC OPERATION.
POWER SWITCH
MODEL 561C
220V 50HZ 3PH
HENNY PENNY CORP.
EATON, OHIO 45320
63205

PARTS LIST

The following are replaceable parts for the gas and electric Computron.
(Refer to drawing in operation section)

Model 500/600 and 561 after Nov. 2000

Item Number	Part Number	Description	Qty
26	16684	Fan - 120 V	1
26	16688	Fan - 208/240 V	1
	18402*	Back-Up High Limit Thermostat	1
	19440RB*	Control Board	1
27	29510	Heat Contactor 24 V	1
20	29509	Primary Contactor 24 V	1
23	29521	Transformer	1
21	55167	Thermal Sensor Assembly (Electric) 3"	1
10	29524	Key switch Assembly	1
21	55168	Thermal Sensor Assembly (Gas) 6"	1
24	30090	Fuse Holder - 5 AMP	1
11	30261	Power Switch	1
1	31268	Decal Membrane Switch	1
1	61442	Decal Membrane Switch - Pollo	1
24	FA53-005	Fuse - 5 AMP	1
	FH51-300*	Control Board Fuse - 3 AMP	1
21	30094	Compression Fitting	1
22	16738	High Limit Thermostat	1
	36097*	Probe guard (Gas)	1
25	18364	Fuse Holder Assembly	1
	29698*	Solenoid - 24 Volt-50 Hz	1
	29515*	Solenoid Valve - 24 Volt-60 Hz	1

Model 561 and RE-500/600 Parts

1	44082	Decal-561	1
1	38384	Decal-RE-500	1
1	38370	Decal-RE-600	1
27	29942	Mercury Contactor-208/240 V	1
20	19405	Primary Contactor-208/240 V	1
23	28979	Transformer-208/240 V	1
21	55167	Thermal Sensor Assembly (Electric) 3"	1
	31900*	Switch Board	1
	28980*	Relay-120 V	1
	ME90-007*	Relay-240 V	1
	TS22-006*	Transformer- 120 V	1
	ME90-006*	Relay-120 V	1

*not shown

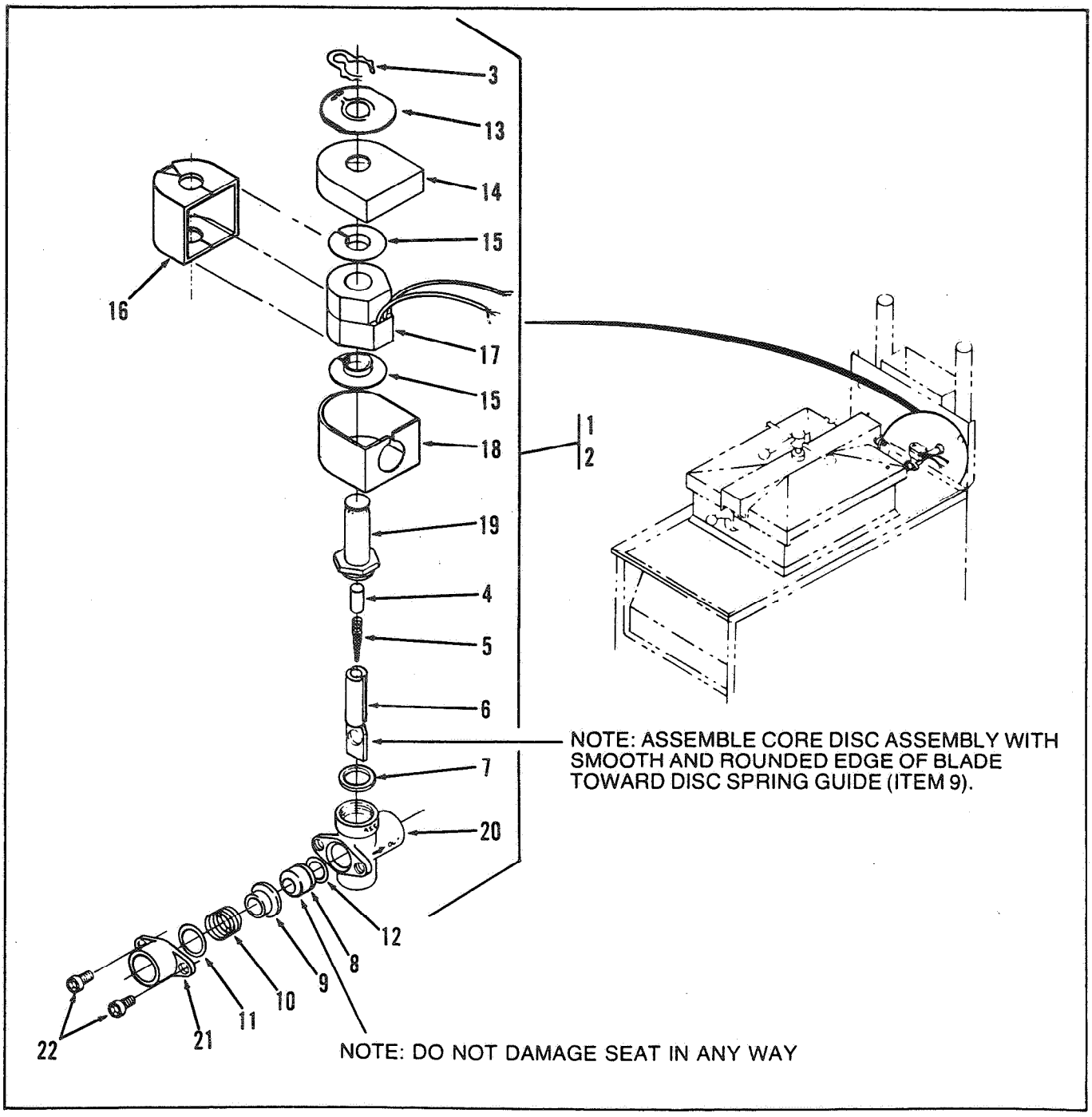

Solenoid Valve Assembly (Gas and Electric Models)

FIGURE & ITEM NO.	PART NUMBER	DESCRIPTION	UNITS PER ASSY.
1		SOLENOID VALVE ASSEMBLY	1
2	17120	KIT, Solenoid Valve Repair	1
3	17101	CLIP, Retaining	1
4	17109	RETAINER, Spring	1
5	17110	SPRING, Core	1
6	17111	CORE, Disc Assembly	1
7	17112	GASKET, Bonnet	1
8	17114	SEAT, Teflon	1
9	17115	GUIDE, Disc Spring	1
10	17116	SPRING, Disc	1
11	17117	RING, Spring Retainer	1
12	17122	SEAT, O-Ring Seal	1
13	17102	PLATE, Solenoid Name	1
14	17103	COVER, Coil Housing	1
15	17104	WASHER, Coil	2
16	17105	YOKE, Coil	1
17	29547	COIL, 24 Volt, 50/60 Hz	1
17	18706	COIL, 208/240 Volt, 60 Cycle	1
17	18726	COIL, 208/240 Volt, 50 Cycle	1
18	17123	HOUSING, Coil	1
19	17108	BONNET, Solenoid	1
20	17113	BODY, Solenoid Valve	1
21	17118	ADAPTER, Pipe	1
22	17119	SCREW, Adapter	2

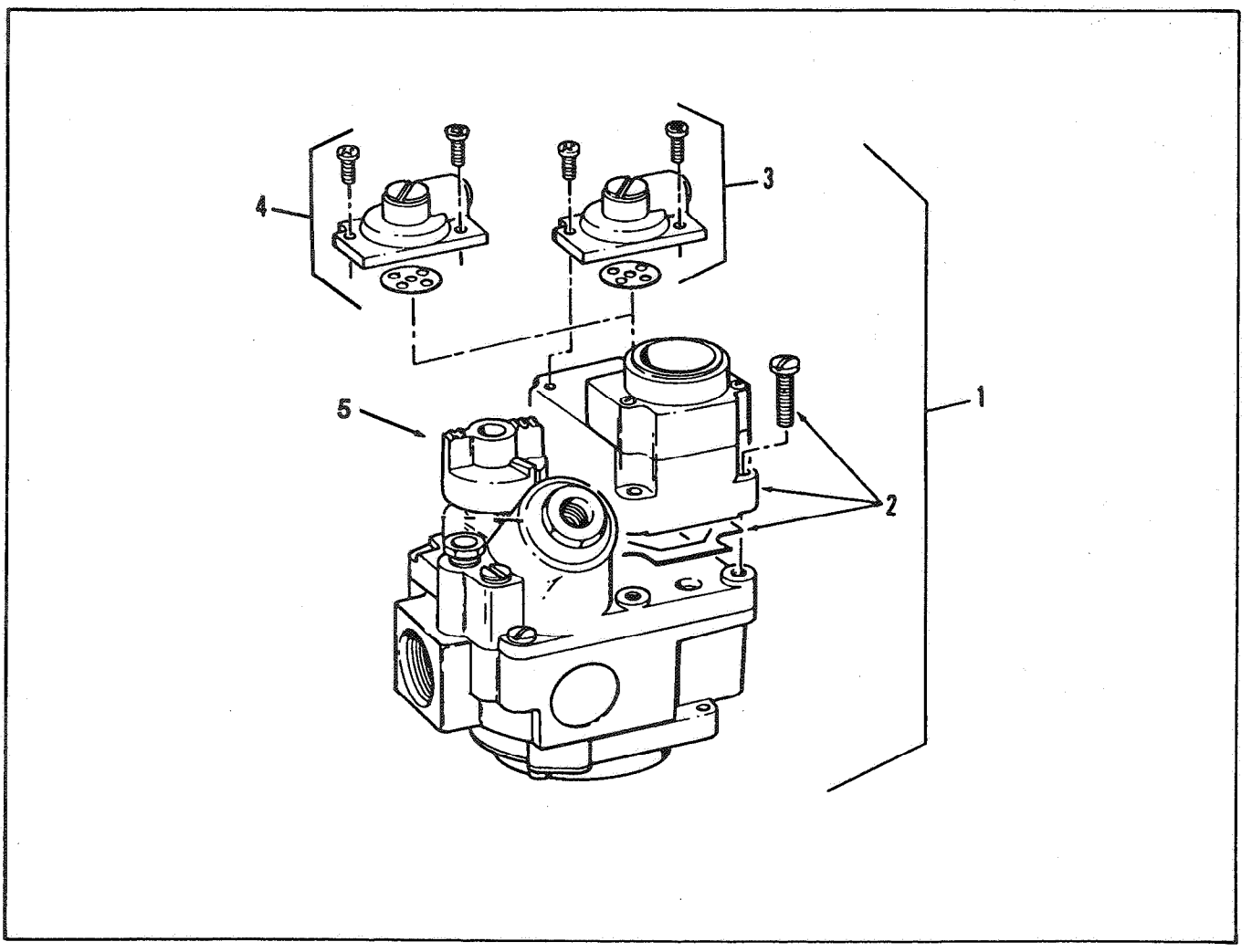

Gas Control Valve (Gas Model)

FIGURE & ITEM NO.	PART NUMBER	DESCRIPTION	UNITS PER ASSY.
		GAS CONTROL VALVE ..... (Gas Model)	
1A	29614	VALVE, Control, Natural Gas, 24 Volt	1
1B	29728	VALVE, Control, Propane Gas, 24 Volt	1
2	29688	OPERATOR, Gas Valve, 24 Volt, Natural	1
2	29729	OPERATOR, Gas Valve, 24 Volt, Propane	1
3	16253	REGULATOR, Gas Valve, Natural Gas	1
4	16352	REGULATOR, Gas Valve, Propane Gas	1
5	16267	DIAL, Gas Cock	1
6	38468	SOLENOID, Gas, 24 Volt, (not shown)	1
	38467	SOLENOID, Gas, 240 Volt, (not shown)	1

COMPUTRON 7000 QUICK REFERENCE

The following is to be used as a quick reference for the cooking and programming of the Computron 7000 control. If more detail is needed, refer to the Computron 7000 excerpt in this manual.

Cooking Operation

1. Make sure that the keyswitch is in the "COOK" position. Push the power switch to the "COOK" position.

2. If the red MELT light is on, wait for it to turn off.

3. Push the grey SELECT PRODUCT switch to pick the product to cook. This switch will keep selecting products until released. If you go past your product, keep pushing the switch, you will come back to it.

4. Drop the product when the green READY light stays on and does not flash. Close the lid. Push TIMER to start the cooking timer. The display will show the time remaining.

5. The product is done when the buzzer beeps and the yellow DONE light flashes. Push TIMER to stop the buzzer. Open the lid and remove the product.

6. To cook more of the same product, go to Step 4. To cook a different product, go to Step 3.

If the display shows "Fil", then it is time to filter the shortening. You can either filter, or bypass filtering:

TO FILTER: Push power switch to "OFF"; filter as usual; go to Step 1. Pump runs with power switch in "PUMP" position.

TO BYPASS FILTERING: Push power switch to "OFF" for about 3 seconds, then back to "COOK". Go to Step 3.

Cooking alarms may occur while the timer is running. The display will flash "AL 1" for the first alarm, "AL 2" for the second, and so on. The buzzer will beep 3 times, then stop. DO NOT PUSH THE TIMER SWITCH DURING THE ALARMS!

The meaning of the alarms depends on your cooking process. They can be used as "stir" or "almost done" messages to the frycook.

The green PRESSURE light will turn on during the cook cycle if the control calls for pressure. Pressure gauge shows the actual pot pressure.

Use idle mode to conserve energy and shortening life. It can be entered manually or automatically. Put the fryer into Idle mode by pushing SELECT PRODUCT until the red IDLE light (in the menu area) turns on.

If the control automatically goes into Idle, the IDLE light will turn on. To resume cooking, go to Step 3.

If the timer is accidentally started, push the TIMER switch to stop it.

If an error in the fryer occurs, the buzzer will sound until you push the TIMER switch. The display will show an error code:

E 5	Pot temperature is too high.
E 6	Temperature probe has failed.
E 10	High limit has tripped; also flashes red HI LIMIT light.
E 41	Memory lost - reprogram complete unit.

The display will continue to flash the error code until the error is fixed. You cannot cook until the error is fixed.

Programming Products

Move the keyswitch to the "Program" position to set cooking times and temperatures. When done, move it back to "COOK."

You push switches to program. Switches are black or grey squares with white boarders. Don't push on the lighted words on the front panel! Example: "push SELECT PRODUCT: means push the switch above the red SELECT PRODUCT light.

1. Push SELECT PRODUCT to pick the product to program. The red light in the menu area shows the selected product.

2. Push SELECT FUNCTION to pick the item to program: time, temperature, etc. The flashing light is the item you **are** setting, the other lights show what **can** be set.

3. Push SELECT TIME to see the times set for the product. You can set up to 10 times in each product. These are called interval times.

   You can push SELECT TIME with an item displayed to see that item at all times in the program. Example: with TEMP flashing, push SELECT TIME to see all temperatures.

4. Push the change switches under the display to change the number displayed. Push the change switch under a number to increase that number by one. If a change switch can be used, the red light above that switch is on.

   For example: if the time 13:25 is displayed, change it to 13:35 by pushing the switch under the "2".

   - Product times can be set from 00:00 (minutes:seconds) to 99:59. To add a new time, push SELECT TIME until 00:00 is displayed, then set the new time. To change a time, push SELECT TIME until the desired time is shown, then push the change switches to set the new time. To remove a time, push SELECT TIME until the desired time is shown, then push the change switches until the display shows 00:00

- Temperatures can be programmed from 170 to 390 degrees F. If you try to go beyond these limits, the buzzer will sound and the display will blank, then go to 170 or 390.

- Alarms and pressures can be turned on or off using any change switch. The display will show "on" or "off".

Four times affect the whole cook cycle. There are:

LOAD COMP: This is load compensation. Set from 1 to 10. O is no load compensation, 10 is full load compensation.

LOAD ANT: This is load anticipation. Set from 0 to 10. 0 is no anticipation, 10 is full anticipation.

PC FACTOR: This is the proportional control factor. Set from 0 to 30. 0 is no proportional control (best recovery time), 30 is full proportional control (best temperature regulation).

FIL CYCLE: This is the number of filter cycles. Set to the number of loads to cook **this product** before filtering.

5. You can push SELECT PRODUCT whenever you are done with a product. This will take you to the next product.

Programming Melt

1. Put keyswitch in "Program" position. Push SELECT PRODUCT until red Melt light turns on. Push SELECT FUNCTION to set the melt temperature or 1st cycle.

2. When the melt temperature is displayed, an "A" in the display means that auto melt is turned on. Example: if the melt temperature is 200 and auto melt is on, the display will show "A200". If auto melt is off, the display will show "200". Push the change switch under the "A" to turn it on or off.

   If auto melt is on, the control will pulse the heating elements until the pot temperature reaches the melt temperature, then automatically select the 1st cycle.

3. The 1st Cycle is the product the control will select on power-up. Products are numbered from 1 to 10; the upper left product is 1, the product below that is 2, etc. Set with change switches.

Programming Idle

1. Put keyswitch in "Program" position. Push SELECT PRODUCT until red Idle light turns on. Push SELECT FUNCTION to set the idle clock time or the idle temperature.

2. When the idle time is shown, the first digit indicates that auto idle is on with an "A". Push the change switch under the "A" to turn it on or off.

   The idle time is shown in minutes. It is set from 0 to 255. If auto idle is off, the idle time is irrelevant.

3. When the idle temp is shown, the type of auto idle is shown with a "C" or a "T" in the first digit. "C" means cycle idle, "T" means times idle. Cycle idle starts the idle clock each time a new product is selected. Timer idle starts the idle clock at the end of each load cooked. Idle is entered automatically when the idle clock times out.

To See The Product Usage

1. With keyswitch in PROGRAM position, push REVIEW USAGE switch. Push SELECT PRODUCT to see the number of loads of each product cooked. All product lights turn on when the total count of **all** products is shown.

2. Push RESET USAGE switch to set a count to zero. Pushing RESET USAGE when all LED's are lit will set the total count and all individual counts to zero. Pushing RESET USAGE when only one product LED is lit will reset only that count, not the grand total.

3. Push REVIEW USAGE when done to return to programming.

The maximum product cycle count is 255. The grand total count maximum is 9,999. If a count reaches the maximum without being reset, it will remain at the maximum until you reset it.

Additional Programming Notes

- The change switches, SELECT PRODUCT and SELECT TIME will auto-repeat when held down: SELECT FUNCTION does not.

- You cannot turn the alarm on in the first time of a cook cycle.

- Pushing SELECT TIME when the LOAD COMP, LOAD ANT, PC FACTOR, or FIL CYCLE lights are on **will not** take you to the next interval time in a product, because these items can only be set in the first interval time.

Important Note

After programming a product (or melt or idle), you should review all settings for all times. Verify that you have deleted any times that you do not want, and that all settings are programmed as required.

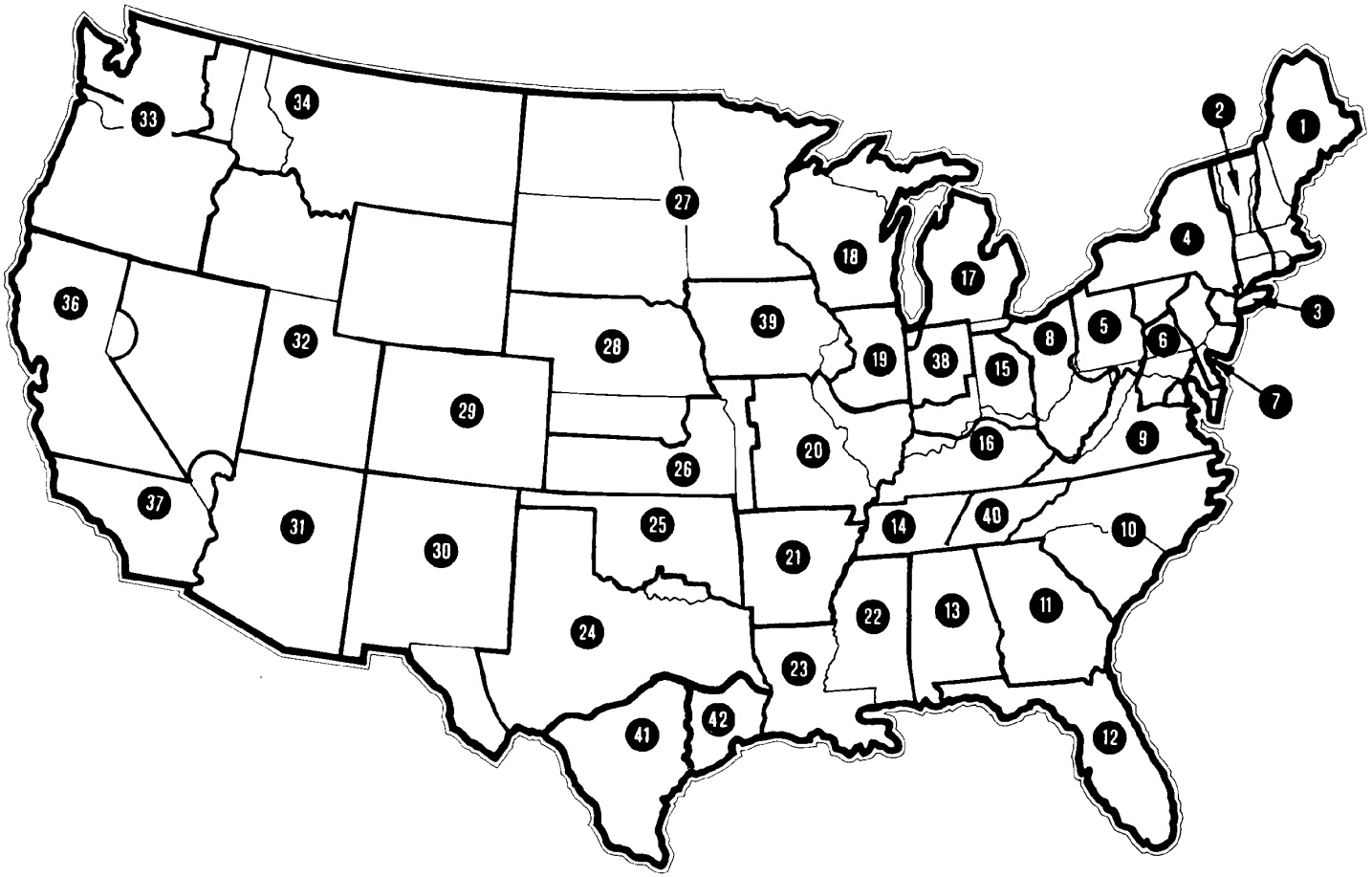
33
34
27
2
1
18
17
4
36
32
28
39
19
38
15
8
5
6
3
7
29
20
16
9
26
37
31
30
25
14
40
10
21
22
13
11
24
23
41
42
12

For Sales or Service Please Contact
The Nearest Henny Penny Distributor

1. **General Services**
100 Hicks Ave.
Medford, MA 02155
(800) 233-1033

2. **Art Cole Associates**
Golden Street
Industrial Park
Meriden, CT 06450
(203) 237-7177

3. **Globe-Monte Metro, Inc.**
47-02 Metropolitan Avenue
Ridgewood, NY 11385
(718) 786-5760

4. **Guertin Dist. Inc.**
5 Technology Drive
East Syracuse, NY 13057-9713
(315) 437-4928
(800) 468-6336

5. **Kreiser Distributing Co.**
13800 Lincoln Highway
N. Huntington, PA 16652
(724) 863-3360

6. **AFS Equipment Company**
9130-X Red Branch Road
Columbia, MD 21045
(410) 964-3770
(800) 969-3770

7. **HP Sales & Service Co.**
200 Rittenhouse Circle, 4-East
Bristol, PA 19007
(215) 785-3250
NJ Watts (800) 477-4379

8. **Astro Food Equipment**
7901 Old Rockside Rd.)
Independence, OH 44131
(216) 619-8821
(800) 367-4237

9. **Carlisle Food Systems, Inc.**
11020 Lakeridge Pkwy.
Ashland, VA 23005
(804) 550-2169

10. **Price-Davis, Inc.**
Route 1, Highway 27
Iron Station, NC 28080
(509) 928-8815
(704) 732-2236
(800) 456-1014

11. **Big A Distributors, Inc.**
P.O. Box 1283
Forest Park, GA 30051
(404) 366-6510
(800) 222-0298

12. **W.H. Reynolds Distributors, Inc.**
4817 Westshore Blvd.
Tampa, FL 33609
(813) 873-2402
Miami-(954) 845-0841
Jacksonville-(904) 781-9054
FL Watts (800) 282-2733

13. **Ber-Vel Distributing Co. Inc.**
P.O. Box 9943
Birmingham, AL 35220
(205) 681-1855

14. **Barnett Supply**
2089 York Ave.
Memphis, TN 38104
(901) 278-0440
Nashville, TN
(615) 242-6451
Scotsman Supply
516 5th Ave., South
Nashville, TN 37203
(615) 242-6451

15. **St. Clair Supply Company**
231 East Main Street
Eaton, OH 45320
(937) 456-5500
(800) 762-2968

16. **Dine Equipment Co.**
3110 Preston Hwy.
P.O. Box 34038 zip 40232
Louisville, KY 40213
(502) 637-3232
FAX (502) 637-5177

17. **United Marketing Assoc.**
11877 Belden Court
Livonia, MI 48150
(734) 261-5380

18. **T&H Distributors**
1235 Parkview
Green Bay, WI 54304
(920) 339-9838

19. **Food Service Solutions, Inc.**
1682 Barclay Blvd.
Buffalo Grove, IL 60089
(847) 459-8040
(847) 459-7942

20. **MEC**
2511 Cassens Dr.
Fenton, MO 63026-2547
(636) 343-0664
(800) 397-1515

21. **Delta Supply Co., Inc.**
3315 W. Roosevelt Rd.
Little Rock, AR 72204
(501) 664-4326

22. **Dixie Supply**
490 Julianne St.
Bldg. A-2
Jackson, MS 39201
(601) 354-3025

23. **Beaullieu Refrigeration Inc.**
200 North Luke St.
Lafayette, LA 70506
(337) 235-9755

24. **S.L.E. Corporation**
1110 Avenue "H" East
Arlington, TX 76011
(817) 640-7999

25. **Brooks Industries**
4420 S.W. 29th St.
Oklahoma City, OK 73119
(405) 685-7200

26. **B & D Dist.**
19915 W. 161st St.
Suite D
Olathe, KS 66062
(913) 768-8588
FAX 913-768-8855

27. **PHT Systems**
1801 Highway 8
Suite 120
New Brighton, MN 55112
(651) 639-0368

28. **Mid-Nebraska Restaurant Supply Co.**
1415 S. Webb Road
Grand Island, NE 68802
(308) 384-5780

29. **Robert G. Wood & Co.**
2080 W. Cornell Ave.
Englewood, CO 80110
(303) 761-0500
(800) 358-3061

30. Open Territory

31. **CPE-USALCO**
1310 West Drivers Way
Tempe, AZ 85284
(480) 496-6995

32. **National Equipment Corp.**
242 West-3680 South
Salt Lake City, UT 84115
(800) 266-5824
(800) 955-9202

33. **The Nicewonger Co.**
19219 West Valley Hwy
Suite M103
Kent, WA 98032
(800) 426-5972
(425) 656-0907 FAX

34. **Tri-State Market Supply**
11115 E. Montgomery, Suite A
Spokane, WA 99206
(509) 928-8815
(877) 828-4268

36. **Western Pacific Distributors, Inc.**
19422 Cabot Boulevard
Haywood, CA 94545
(510) 732-0100

37. **Don Walters Company**
2121 S. Susan Street
Suite A
Santa Ana, CA 92704
(714) 979-5863

38. **Troyer Foods, Inc.**
17141 State Route 4
Goshen, IN 46526
(219) 533-0302

39. **Tri-City HP, Inc.**
527 West Fourth St.
Davenport, IA 52801
(319) 322-5382

40. Certified Commercial Service & Equipment (CCSE)
6031-A Industrial Heights Drive
Knoxville, TN 37909
(865)-546-8778

41. **Gower Distributors, Inc.**
P.O. Box 4804
Box 216K Rt. -4
Victoria, TX 77903
(361) 573-9777

42. **Top-Line Distributors**
1501 College Ave.
Houston, TX 77585
(713) 946-6008

43. **DSL Inc., Canada**
14520 128th Ave.
Edmonton, Alberta
Canada T5L3H6
(403) 452-7580
(Alberta, British Columbia, Manitoba, Saskatchewan, Yukon, & N.W. Territories)

44. **Taylor Freezers, Inc.**
52 Armthorpe Rd.
Brampton, Ontario
Canada L6T5M4
(905) 790-2211
(Ontario, Montreal, and Maritime Provinces)

45. **Bazinet Taylor Ltee.**
4750 Rue Bourg
Ville St. Laurent
Quebec, Canada H5T 1J2
(514) 735-3627
(Quebec only)

If Further Assistance Is Needed Please Contact: **Henny Penny Corporation**
1219 U. S. Route 35 West
Eaton, Ohio 45320
1-800-417-8417
Fax 1-800-417-8402

Revised 4-01

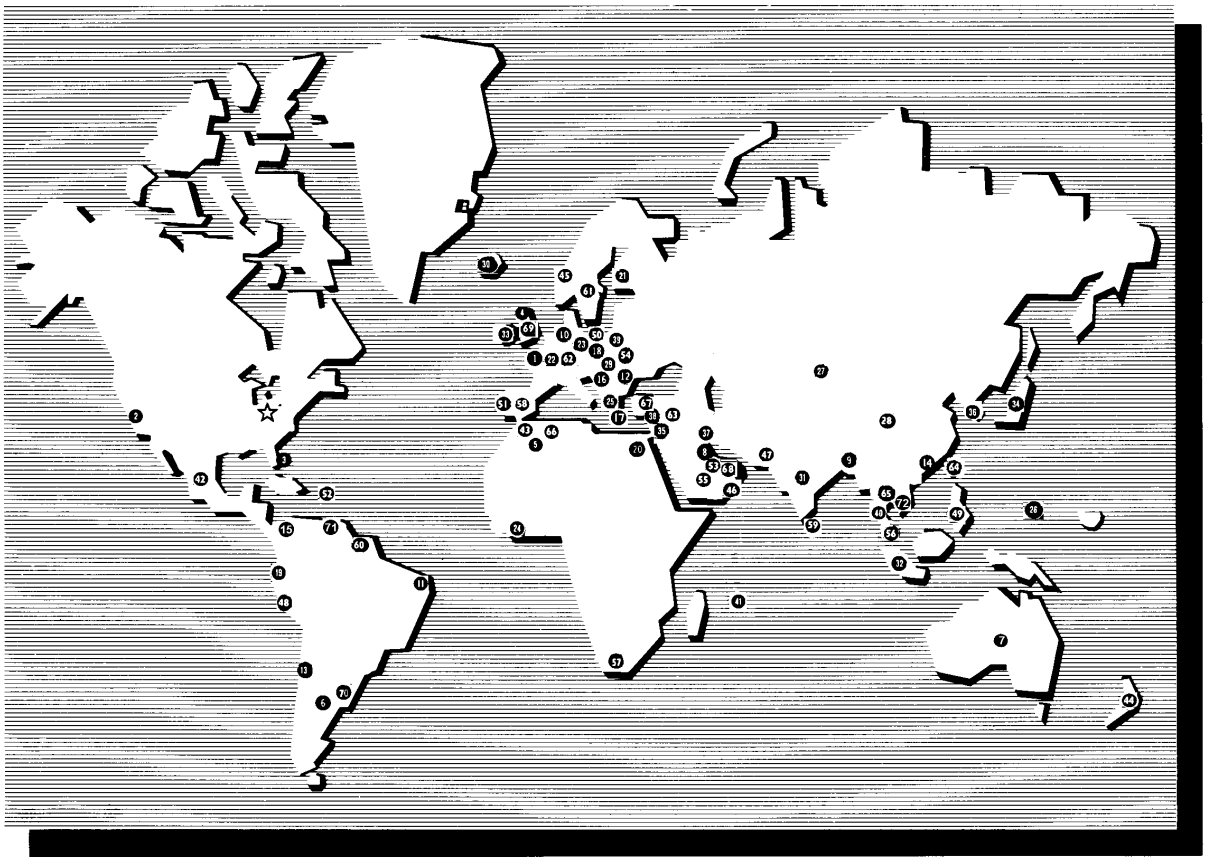

Henny Penny
International Distributor Network

Revised 3/00

Henny Penny International Distributor Network

U.S. Headquarters
Henny Penny Corporation
1219 U.S. Route 35 West
Eaton, OH 45320 USA
Telephone: 937-456-8417
Fax: 937-456-1860

Representative Office
1 . Henny Penny Corporation
Representative Office
Parc d'Entreprises de
l'Esplanade
2bis Rue Paul Henri Speak
Saint Thibault des Vignes
77462 Lagny sur Mame Cedex,
France
Telephone: 33 (1) 60075600
Fax: 33 (1) 60071489

U.S. Export Centers
2. Feco International Company
20 North San Mateo Drive,
Suite 9
San Mateo, CA 94401 USA
Telephone: 415-348-3499
Fax: 415-348-3575

3. **Caribbean Islands & Central America** (excluding Puerto Rico)
Total Equipment Suppliers
9550 NW 41st St.
Miami, FL 33178
Telephone: 305-718-9550
Fax: 305-718-9505

Algeria
4. SOMAB
Y1 Rue Mahmoud Boudjatit
(Oasis) Ager, Algeria
Tel: 213-21-23-3051/3052
Fax: 213-21-23-3161

Argentina
5. Oditec S.A.
Augstin Alvarez 2128
1602 Florida
Buenos Aires, Argentina
Telephone: (541) 796-0820
Fax: (541) 796-2009

6. **Australia**
J.L. Lennard Pty. Ltd.
937-941 Victoria Rd.
West Ryde NSW 2114
Sydney, Australia
Telephone: 617-3272-4744
Fax: 617-3272-4799

Bahrain
7. Mohammed Jalal Catering
Old Palace Road
P.O. Box 1335
Manama, State of Bahrain
Telephone: 973-53-45-39
Fax: 973 53-14-78

Bangladesh
8. Puffin International Ltd.
3691B Elephant Rd.
Swarankika Plaza
4th Floor-Dhaka 1205
Dhaka, Bangladesh
Telephone: 8802-863117
Fax: 880-2-867563

Belgium
9. Engelen-Heere N.V.
Industrialpark Terbekehof
Fotografielaan 14
B-2610 Antwerpen (Wilrijk)
Telephone: 323-825-5577
Fax: 323-825-3702

Brazil
10. Pesin Equipment Food Service
R. Olavo Bilac 188/198
Sao Caetano Do Sul - SP
Brazil
Telephone:55-11-7690-1470
Fax: 55-11-7690-1466

Bulgaria
11. E.C.E. - CAIX
23A Rue Oborichte
Sofia 1604, Bulgaria
Telephone: 19-359-2-946-1479
Fax: 19-359-2-946-1669

Chile
12. IMAHE
Manuel Montt 1154 Providencia
Santiago, Chile
Tel: 562-341-4953/5707
Fax: 562-274-8567

China
13. Bonny Foodservice Products
Flat C, 8/F, Yeung Yiu Chung
Industrial Bldg., No. 20
Wang Hoi Rd.
Kowloon Bay, Kowloon Hong Kong
Telephone: 852-796-5616
Fax: 852-799-8490

Colombia
14. Industrial Taylor Ltda.
Transversal 93, Numero 64-24
Apartado Aereo 95075
Bogota D.E., Colombia
Telephone: 57 (1) 4340016
Fax: 571-223-2642

Crotia
15. New Rok
Opatija M. Tita 15
51410 Opatija, Crotia
Telephohe: 385-51-701-251
Fax: 385-51-701-251

Cyprus
16. AMF Chistofides Ltd.
104A Prodromos Str.
P.O. Box 25100
Nicosia, Cyprus
Telephone: 357-2-454-380
Fax: 357-2-454-088

Czech Republic
17. Citus
Argentinska 20
CZ 4170 00 Prague 7
CZECH REPUBLIC
Telephone: 420-2-667-10-561
Fax: 420-2-667-10-557

Denmark
18. Inter-Gastro A.S.
Midtager 18
2605 Brondby
Denmark DK2605
Telephone: 45-43292000
Fax: 45-43292001

Ecuador
19. Equindeca Cia. Ltda.
Hotel El Conquistador
Gran Colombia 6-65
Cuenca, Ecuador
Telephone: 593-7-831788
Fax: 593-7-843221

Egypt
20. Con Trade Centre
3A Ramsis Street
Maaroof Building #83 & #62
Cairo, Egypt
Telephone: 20 (2) 770642/762551
Fax: 20 (2) 756258

Estonia
21. Sisustaja As
Tihniku 5
11625 Tallinn, Estonia
Telephone: 372-6502300
Fax: 372-6502301

Finland
22. Monilaite Oy
P.O. Box 27
Salpakuja 6
SF-01200 Vantaa, Finland
Telephone: 358-9-877-0100
Fax: 358-9-877-01099

France
23. Diffusion International de
Materiel (DIM)
Parc d'activite Clemenceau
Chemin du Chateau d'Eau
B.P. 4009
59704 Marcq-En-Baroeuil
Cedex, France
Telephone: (33) 20890000
Fax: (33) 20727355

Germany
24. Sesjak KG
Wullener Feld 9a
D-58454 Witten
Germany
Telephone: 49-2302-697077
Fax: 49-2302-698451

Ghana
25. DRT Ghana
E6619 Ablade Road
Kanda Estate
P.O. Box C2074
Accra-Cantonments, Ghana
Telephone: 233-2123-3949
Fax: 233-2123-1380

Greece
26. Domestica S.A.
65 Stournara Str.
Athens 10432, Greece
Telephone: 30-15-24-30-14/15
Fax: 30-15-22-91-58

Guam
27. Pacific Technical Service, Inc.
New Commercial Building
#979 Rt. 16, Suite B-3
Barrigada, Guam 96913
Telephone: 6710632-5000
Fax: 671-632-3333

Holland
28. Englelen-Heere B.V.
Straatveg 85, Postbus 35020
3005 DA Rotterdam, Holland
Telephone: 311-042-23077
Fax: 311-042-23435

Hong Kong
29. Bonny Foodservice Products
Flat C, 8/F, Yeung Yiu Chung
Industrial Building #20
Wang Hoi Road
Kowloon Bay, Kowloon,
Hong Kong
Telephone: 852-796-5616
Fax: 852-799-8490

Hungary
30. Hotex Service
H-2094 Nagykovacsi
Kossith Lajos u. 1.
Hungary
Telephone: 36-263-56653/89463
Fax: 36-26389463

Iceland
31. A. Karlsson H. F.
Brautarholti 28
105 Reykjavik, PO Box 167
Iceland
Telephone: 354-560-0900
Fax: 354-560-0901

India
32. AISHWARYA
Trust Complex, 10 OVG Rd
Basavanagudi
Bangalore 560004, India
Telephone: 91-80-667-7576
Fax: 91-80-667-7576

Int'l. Refrigeration Corp
7 Netaji Subhash Marg
Darya Ganj
New Delhi 110002, India
Telephone: 91-11-3275651
Fax: 91-11-6221827

Indonesia
33. P.T. Gema
JL. Raya Bloulevard Raya
Block IOA 2 No. 27
Kelapa Gading Permai
Jakarta 14240, Indonesia
Telephone: 62-21-4532077
62-21-4508910
Fax: 62-21-4532586/4530777

Ireland
34. Martin Food Equipment Ltd.
Gaskin Business Park
Coes Road
Dundalk, Louth County
Ireland
Telephone: 353-42-30366
Fax: 353-42-30370

Italy
35. Allegra SRL
Corso Matteotti, 5 - 10121
Torino, Italy
Telephone: 39-011-540264
Fax: 39-011-533779

Japan
36. Toei Kogyo Co. Ltd.
4F, Nissay Nishi-Gotanda
Building 24-5
Nishi-Gatanda 7-Chome
Shinagawa-ku, Tokyo 141-0031
Japan
Telephone: 813-3779-1081
Fax: 813-3779-1638

Jordan
37. Awar Trading Est
PO Box 962227
Amman 11196, Jordan
Telephone: 962-6-55-19-610
Fax: 962-6-55-19-605

Korea
38. Ohjin Corporation
3rd Floor, Hee Jung Building
1635-0 Seocho-dong
Seocho-ku
C.P.O. Box 3252
Seoul 137-070, Korea
Telephone: 82-2-5850441
Fax: 82-2-5874197

Kuwait
39. Mabrook Hotel Supplies Co.
PO Box 43832 Hawalli
32053 Kuwait
Telephone: 965-481-8242
965-483-01648
Fax: 965-483-4314

Revised 5/01

Lebanon
40. Pro Kitchen
Cahlfoun Building
Kaslik - Main Road
PO Box 1066 Jounieh
Lebanon
Telephone: 961-9-635-077
Fax: 961-9-635-059

Lithuania
41. Master Group Baltic Master
Dariaus Ir Girena 175
2038 Vilnius, Lithuania
Telephone: 3702-306-528/529
Fax: 3702-306-533

Malaysia
42. SCC Corp. Sdn. Bhd.
19-21 Jalan Hujan
Taman Overseas Union
58200 Kuala Lumpur,
Malaysia
Telephone: 60-3-77828384
Fax: 60-3-77818561

Malta
43. C & H Bartoli Ltd.
232 The Strand
Gzira Gzros, Malta
Telephone: 356-342-584
Fax: 356-342-569

Mauritius Island
44. (Mauritius, Reunion Island, Seychelles)
Hassam Moussa Rawat
10 Bourbon Street
P.O. Box 492
Port Louis, Mauritius Island
Telephone: 160 (230) 2080024
Fax: 160-230-2080147

Mexico
45. Central Mexico Metro Mexico City
Cavimex S.A. de C.V.
Revillagigedo No. 61 Col Centro
Mexico, D.F. 06070
Mexico
Telephone: 525-521-4200
Fax: 525-510-2791

Pacific
Micro Herros De Occidente,
S.A. de C.V.
Av. Juan Palamar y Arias
#83 Col. Jardines Vallarta
Zapopan, Jalisco, Mexico
C.P.45020
Telephone: 52-3-629-54-05
Fax: 52-3-673-29-43

Southeast
Equipo Para El Mercado
S.A. de C.V
Calle 55 No. 501-B por 60 y 62
Merida, Yucatan,
Mexico C.P. 97000
Telephone: 52-99-236500
Fax: 52-99-286649

Morocco
46. Electra
Boulevard AHL Loghlam
BP 25698
Sidi Bernoussi - Ain-Sebaa
Casablanca Morocco
Telephone: 212-22-753-531
Fax: 212-22-753-554

New Zealand
47. Taylor Equipment Limited
4 Ponuz Place
Mt. Wellington
Auckland, New Zealand
Telephone: 64 (9) 5733377
Fax: 64 (9) 5730841

Norway
48. Grillfagmannen A.S.
Ostensjoveien 44
N-0667 Oslo 6, Norway
Telephone: 47 (2) 651410
Fax: 47 (2) 720017

Oman
49. Mohsin Haider Darwish LLC
P.O. Box 880
Ruwi, Code 112
SULTANATE OF OMAN
Telephone: 968-703411
Fax: (968) 789927

Pakistan
50. The Equipment Company
Ground Floor, Dadabhoy Centre
Sharea Faisai, Karachi 75530
Pakistan
Telephone: 922-1-778-1778/2778
Fax: 922-1-587-0456/778-2777

Peru
51. Importadora Tecnica
Comercial C.R. Ltda.
Jr. Marcos de Aramburu #595
Lima 17, Peru
Telephone: 51-1-226-2124
Fax: 51-1-275-2689

Philippines
52. HKR Equipment Corp.
2nd Floor, THC Bldg.
2176 Primo Rivera St.
La Paz, Makati City, Philippines
Telephone: 632-899-4511
Fax: 632-899-4541

Poland
53. I. F. E.
Rydygiera 12
01 793 Warsaw, Poland
Telephone: 48-3912-3373
42-22-663-4820/4069
Fax: 48-3912-3373

Portugal
54. Restaurotel
AV Da Republica
83 C 1050
243 Lisboa
Portugal
Telephone: 351 7967116/7/8/9
FAX: 351 7933982

Puerto Rico
55. Progressive Sales and Service
PO Box 10876
Caparra Heights Station
San Juan, Puerto Rico 00922-0876
Telephone: 787-782-7474
Fax: 787-793-6479

Qatar
56. Tristar Group
C.R. No. 6778
P.O. Box 4746
Doha, Qatar
Telephone: 974-4664433
Fax: 974-4365365

Romania
57. Delta Technologies Romani S.A.
Sector 6, 20 Constructorilor Blvd.
Bloc 20 A, sc. B 7th Floor
Apt. 64
Bucharest, D599 Romania
Telephone: 401-220-4261
Fax: 401-220-3990
US Address:
115 Main St.
Mishawaka, In. 46544
Telephone: 219-256-3783
Fax: 219-256-7130

Saudi Arabia
58. Commercial Center
Development & Economy
P.O. Box 1210
Jeddah 21431, Saudi Arabia
Telephone: 966 (2) 629-1857
Fax: 966 (2) 629-1860

Senegal
59. Breading Systems Co.
C/ Ripoche,14
35007 Las Palmas
Spain
Telephone: 34-9-28-22-43-86
Fax: 34-9-28-27-56-90

Singapore
60. Simplex Pte. Ltd.
Block 1, Lorong 8
Toa Payoh Industrial Park 01-1383
Singapore 319053
Telephone: 65-251-6241
Fax: 65-253-8814

Shopfit (S) Pte. Ltd.
Blk 623 Aljunied Industrial Complex
Unit 02-09
Singapore 389835
Telephone: 65-7410911
Fax: 65-7438911

South Africa
61. Foodserv "CC"
PO Box 55269
Northlands 2116,
Republic of South Africa
Telephone: 27 (11) 616-5183,
Fax: 27 (11) 616-8287

Spain
62. Adisa
Tuset, 8-10
08006 Barcelona, Spain
Telephone: 34-93-415-0018
Fax: 34-93-218-1782

Sri Lanka
63. Sperrys Commercial Equipment
1014 Parliament Road
Etul Kotte
Kotte/Colombo, Sri Lanka
Telephone:941-873-0561
Fax: 941-863-8361

Suriname
64. Tessco N.V.
Oude Charlesburgweg #47
Paramaribo Suriname
Telephone: 597-473366/477388
Fax: 597-473366

Sweden
65. Eurospice AB
Box 5050
Hejargatan 6
632 29 Eskilstuna, Sweden
Telephone: 46 (16) 125600
Fax: 46 (16) 131390

Switzerland
66. Stuppen Fast Food GmbH
Oberneuhofstrasse 8
CH-6340 Baar, Switzerland
Telephone: 41-41-761-5052
Fax: 41-41 761-7210

Syria
67. Lahham Trading & Contracting
Hamra Str. Omyad Building
P.O. Box 2960
Damascus Syria
Telephone: 963-11-331-2251
Fax: 963-11-331-2252

Taiwan
68. Feco Corporation
420, 11 F Keelung Rd.
Sec. 1 Postal Code 110
Taipei, Taiwan
Republic of China
Telephone:886-2-2758-2288
Fax: 886 (2) 2758-2297

Thailand
69. Fieco Company Ltd.
43/524-526 Amarinnivej 1
Anusaovari Laksi
Phaholoyothin Road
Bangkok 10220
Thailand
Telephone: 66-2-521-3824/3878
Fax: 66-2-552-0833

Tunisia
70. Semci
16, Rue Aziz Taj
1101 Tunis RP, Tunisia
Telephone: 216 -133-1501
Fax: 216-133-0698

Turkey
71. Klimatek
Inonu Caddesi, Opera Palas 73/5
80090 Gumussuyu
Istanbul, Turkey
Telephone: 90-212-245-1812
90-212-293-7892
Fax: 90-212-293-3903

United Arab Emirates
72. Habtoor International
P.O. Box 55332
Dubai, United Arab Emirates
Telephone: 971-4-272-1212
Fax: 971-4-272-2255

United Kingdom
73. Servequip Products Ltd.
214 Purley Way
GB-Croyden CRO 4XG, England
Telephone: 44-208-6868855
Fax: 44-208-6817509

Uruguay
74. Tecnoland S.A.
Dr. José Scorsería 2740
CP 11300 Montevideo, Uruguay
Telephone: 598-2-7105900
Fax: 598-2-7105900

Venezuela
75. Prefer, C.A.
Avenida Presidente Medina
Edificio Prefer, Local No. 44
Entre Calles Chile y Progreso
urb. Los Acacias
Caracas 1040, Venezuela
Telephone: 58-212-633-6933/2801
Fax: 58-212-632-6711

Vietnam
76. Cao Sinh Pte
Block 1, Lorong 8
Toa Payoh Industrial
Estate #01-1383
Singapore 319053
Telephone: 65-2516241
Fax: 84-2538814

Yemen
77. Mukiriani Sana'a
PO Box 8150 Sana'a
Yemen
Telephone: 967-1-230-675
Fax: 967-1-230-929

Revised 4/01