HENNY PENNY®
Global Foodservice Solutions

Henny Penny
CFA Electric Open Fryer

Model OFE-321
Model OFE-322

TECHNICAL MANUAL

TABLE OF CONTENTS

SECTION 1. TROUBLESHOOTING

1-1. INTRODUCTION

This section provides troubleshooting information in the form of an easy to read table.

If a problem occurs during the first operation of a new fryer, recheck the Installation Section of the Operator's Manual.

Before troubleshooting, always recheck the Operation Section of the Operator's Manual.

1-2. SAFETY

Where information is of particular importance or is safety related, the words DANGER, WARNING, CAUTION, or NOTE are used. Their usage is described on the next page:

SAFETY ALERT SYMBOL is used with DANGER, WARNING or CAUTION which indicates a personal injury type hazard.

NOTICE

NOTICE is used to highlight especially important information.

CAUTION

CAUTION used without the safety alert symbol indicates a potentially hazardous situation which, if not avoided, may result in property damage.

CAUTION

CAUTION used wih the safety alert symbol indicates a potentially hazardous situation which, if not avoided, could result in minor or moderate injury.

WARNING

WARNING indicates a potentially hazardous situation which, if not avoided, could result in death or serious injury.

DANGER

DANGER INDICATES AN IMMINENTLY HAZARDOUS SITUATION WHICH, IF NOT AVOIDED, WILL RESULT IN DEATH OR SERIOUS INJURY.

1-3. TROUBLESHOOTING

To isolate a malfunction, proceed as follows:

1. Clearly define the problem, or symptom and when it occurs.
2. Locate the problem in the troubleshooting table.
3. Review all possible causes, then one at a time, work through the list of corrections until the problem is solved.

WARNING

If maintenance procedures are not followed correctly, injuries and/or property damage could result.

PROBLEM	CAUSE	CORRECTION
With the switch in the POWER position, fryer is completely inoperative	• Open circuit	• Check to see if unit is plugged in • Check breaker or fuse at supply box • Check POWER switch per Power Switch Section; replace if defective • Check voltage at wall receptacle • Check cord and plug
Shortening will not heat but lights are on	• Faulty contactor (elec. model) • Faulty temperature probe • Faulty high limit • Faulty drain switch	• Check contactor per Heating Contactors Section • Check temperature probe per Temperature Probe Replacement Section; “E-6A or B” • Check high limit per the appropriate High Temperature Limit Control Section; “E-10” • Check drain switch per Drain Microswitch Section; “E-15"

1-3. TROUBLESHOOTING(Continued)

PROBLEM	CAUSE	CORRECTION
Heating of shortening too slow	• Low or improper voltage (elec. unit)	• Use a meter and check the receptacle voltage against the data plate
	• Weak or burnt out elements (elec. unit)	• Check heating elements per Heating Elements Section
	• Wire(s) loose	• Tighten
	• Burnt or charred wire connection	• Replace wire and clean connectors
	• Faulty contactor	• Check contactor per Heating Contactors Section
Shortening overheating	• Temperature probe needs calibration	• Calibrate temperature probe if ± 10° off; if more than ± 10° off, replace temperature probe
	• Mercury contactor stuck closed	• Check mercury contactor for not opening; replace if necessary (elec. unit)
	• Bad control board	• Replace control board if heat indicator stays on past ready temperature
Foaming or boiling over of shortening	• Water in shortening	• At end of cook cycle, drain shortening and clean
	• Improper or bad shortening	• Use recommended shortening
	• Improper filtering	• Refer to the Filtering the Shortening Section in Operator's Manual
	• Improper rinsing after cleaning fryer	• Clean and rinse the frypot; then dry thoroughly

1-3. TROUBLESHOOTING (Continued)

PROBLEM	CAUSE	CORRECTION
Shortening will not drain from frypot	• Drain valve clogged with crumbs • Drain valve will not open by turning handle	• Open valve, force cleaning brush through drain • Replace cotter pins in valve coupling
Filter motor runs but pumps shortening slowly	• Pump clogged • Filter line connection loose • Solidified shortening in lines	• Remove pump cover and clean • Tighten all filter line connections • Clear all filter lines of solidified shortening
Filter switch on but motor does not run	• Defective switch • Defective motor • Motor thermal protector tripped	• Check/replace switch per Filter Switch Section • Check/replace motor • Reset thermal switch on filter motor
Motor hums but will not pump	• Clogged lines or pump	• Remove and clean pump and lines • Replace pump seal, rotor and rollers

1-4. WARNINGS AND ERROR MESSAGES

The controls monitor procedure problems and system failures with warnings and error codes. The display shows the warning or error code, and an alarm sounds.

Pressing CANCEL 2 cancels most warnings and pressing any control button stops most error code alarms. But there are some exceptions (see below). The display shows the error until the situation is corrected.

WARNINGS

DISPLAY	CAUSE	CORRECTION
"W-1" "LOW VOLTAGE"	Incoming supply voltage too low	Have voltage at plug and receptacle checked
"W-2" "SLOW HEAT-UP"	Faulty components or connections	Have elements, connections, and contactors checked
"W-3" "WAS NOT READY"	Product loaded into frypot before READY lights	Wait until shortening is at proper temperature before loading product
"W-4" "SLOW COOKING"	Too much product in frypot	Do not overfill frypot
"W-5 "SLOW COOKING"	Product loaded into frypot before READY lights	Wait until shortening is at proper temperature before loading product
"W-6" "SLOW COOKING"	Faulty components or connections	Have elements, connections, and contactors checked
"W-7" "LOW AMPS"	Faulty components or connections	Have elements, connections, and contactors checked
"W-9" "DISCARD PRODUCT"	Product overcooked. (may appear after a "SLOW COOKING" warning)	Discard product immediately
"OIL TOO HOT"	Didn't allow shortening to drop to current product's setpoint temperature	Cancel button stops this warning; once the shortening drops to setpoint temperature, the alarm automatically stops

1-4. WARNINGS AND ERROR MESSAGES (Continued)

ERROR CODES

DISPLAY	CAUSE	CORRECTION
"E-4" "CPU TOO HOT"	PC board too hot	Check ventilation louvers on side of fryer for obstructions; if louvers are clear, have PC board checked
"E-5" "FRYER TOO HOT"	Controls sensing 405°F or above	Have heat components and temperature probe checked
"E-6" (A or B) "FRYER TEMP SENSOR FAILED"	Faulty temperature probe or connection	Have temperature probe and connection checked
"E-10" "HIGH LIMIT TRIPPED"	Shortening temperature too hot, drain valve opened while heat was on, or faulty high limit	Reset high limit (see Operating Components Section); check shortening temperature for overheating; have heat components checked if high limit continues to trip.
"E-15" "DRAIN IS OPEN"	Drain is open or faulty microswitch	Close drain; have drain microswitch checked if error code persists
"E-25" "HEAT AMPS WERE TOO HIGH"	Wrong or faulty elements or wiring problem	Have electrical supply, wiring, and elements checked **NOTICE** Because of the seriousness of this error code, turn the POWER switch off and back on to cancel
"E-26" "HEAT AMPS ARE LOCKED ON"	Faulty contactors or PC board	Have the contactors and PC board checked **NOTICE** This error code could be displayed even with the POWER switch turned off. Unplug fryer or shut off the wall circuit breaker to disconnect electrical power to fryer.

3-5. WARNINGS AND ERROR MESSAGES (Continued)

ERROR CODES

DISPLAY	CAUSE	CORRECTION
"E-41" "SYSTEM DATA LOST"	Memory scrambled; an individual product program may be scrambled: Ex: "E-41 -2- DATA LOST"; this means product #2 program is scrambled	Turn the POWER switch off and back on; if error code persists, have the PC board checked or re-initialized
"E-46" "DATA SAVE FAILED"	Faulty eprom or PC board	Turn the POWER switch OFF and back on; if error code persists, have the PC board checked or re-initialized
"E-47" "ANALOG SYSTEM OR 12 VOLT FAILED"	Failure of 12 volt DC supply on the I/O board	Turn the COOK/PUMP switch OFF and back to COOK; if the WAIT and READY DO NOT light up when the 8888's are displayed, have the I/O board replaced
	Amp sensors plugged in backwards	Have positions of amp sensors checked
	Faulty PC board	Have control panel replaced
"E-48" INPUT SYSTEM ERROR"	Failure of 12 volt DC supply on the I/O board	Turn the COOK/PUMP switch OFF and back to COOK; if the WAIT and READY DO NOT light up when the 8888's are displayed, have the I/O board replaced
	Faulty PC board	Have control panel replaced
"E-70" "PWR SW OR WIRES FAILED"	Faulty POWER switch or switch wiring; faulty I/O board	Have POWER switch checked, along with its wiring; have I/O board checked
"E-92" "24 VOLT FUSE"	Blown 24 volt controller fuse, or bad 14-pin cable connection	Have the 14-pin cable connector checked or have the fryer checked for a short to ground in components such as the drain switch, or high limit and wiring

SECTION 2. MAINTENANCE

2-1. INTRODUCTION

This section provides procedures for the checkout and replacement of the various parts used within the fryer. Before replacing any parts, refer to the Troubleshooting Section. It will aid you in determining the cause of the malfunction.

2-2. MAINTENANCE HINTS

1. You may need to use a multimeter to check the electric components.

2. When the manual refers to the circuit being closed, the multimeter should read zero unless otherwise noted.

3. When the manual refers to the circuit being open, the multimeter will read infinity.

2-3. COMPLETE CONTROL PANEL REPLACEMENT

Should the control board become inoperative, follow these instructions for replacing the board.

1. Remove electrical power supplied to the unit.

To avoid electrical shock or property damage, move the POWER switch to OFF and disconnect main circuit breaker, or unplug cord at wall receptacle.

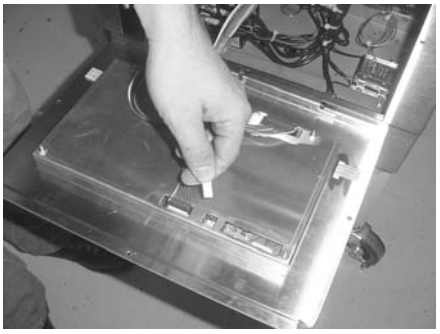

2. Remove the four screws securing the control panel and lift out.

3. Unplug the wire connectors going to the control board.

4. Install new control panel in reverse order.

CAUTION

When plugging connectors onto new control panel, be sure the connectors are inserted onto all of the pins, and that the connectors are not forced onto the pins backwards. If not connected properly, damage to the board could result.

2-4. POWER SWITCH

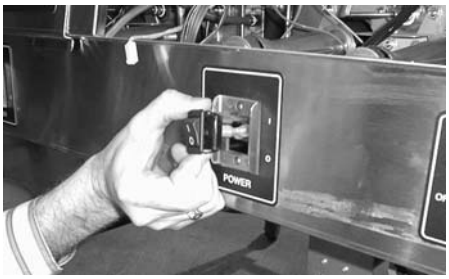

1. Remove electrical power supplied to fryer.

To avoid electrical shock or property damage, move the POWER switch to OFF and disconnect main circuit breaker, or unplug cord at wall receptacle.

2. Remove control panel.

3. Label and remove the wires from the switch. With test instrument, check across the terminals of the switch with the switch in the ON position, then in the OFF position. With the switch in the ON position, the circuit should be closed. With the switch in the OFF position, the circuit should be open. If the switch checks defective, replace by continuing with this procedure.

4. With control panel removed, and the wires off the switch, push in on tabs on the switch to remove from panel.

5. Replace with new switch, and reconnect wires to switch.

6. Replace the control panel.

2-5. TRANSFORMER

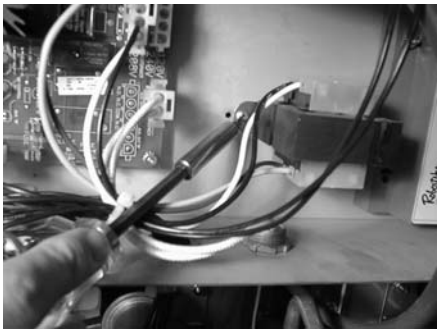

The transformer reduces voltage down to accommodate those components with low voltage.

1. Remove electrical power supplied to the unit.

To avoid electrical shock or property damage, move the POWER switch to OFF and disconnect main circuit breaker, or unplug cord at wall receptacle.

2. Remove the control panel as discussed in Complete Control Panel Replacement Section.

3. Squeeze on the wire connector at the I/O board assembly to disconnect the wires from the transformer.

4. Using a Phillips head screwdriver, remove the two screws securing the transformer to the shroud.

5. Install the new transformer in reverse order.

2-6. I/O POWER SUPPLY BOARD ASSEMBLY

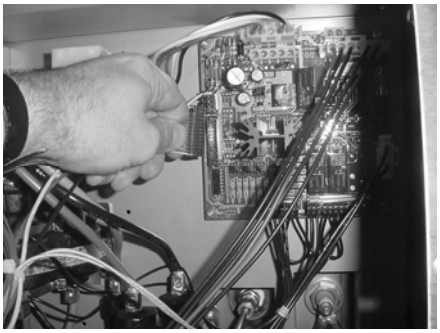

The input/output power supply board assembly distributes voltage to the various components in the fryer. The board also receives information from components in the fryer.

1. Remove electrical power supplied to the unit.

To avoid electrical shock or property damage, move the POWER switch to OFF and disconnect main circuit breaker, or unplug cord at wall receptacle.

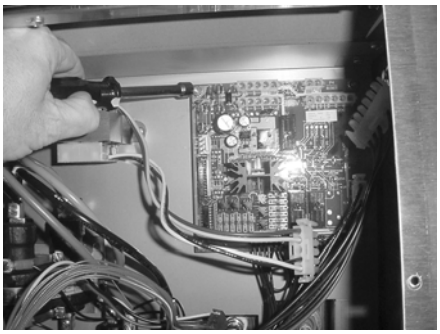

2. Remove the control panel as discussed in Complete Control Panel Replacement Section.

3. Disconnect the wire assemblies from the board.

4. Using a nut driver or wrench, remove the four keps nuts securing the board to the shroud.

5. Install the new I/O board assembly in reverse order.

2-7. DRAIN MICROSWITCH

Upon turning the drain handle, the drain microswitch circuit should open, cutting off the pilot flame. This will prevent the fryer from heating while shortening is being drained from the frypot.

1. Remove electrical power supplied to the unit.

To avoid electrical shock or property damage, move the POWER switch to OFF and disconnect main circuit breaker, or unplug cord at wall receptacle.

2-7. DRAIN MICROSWITCH (Continued)

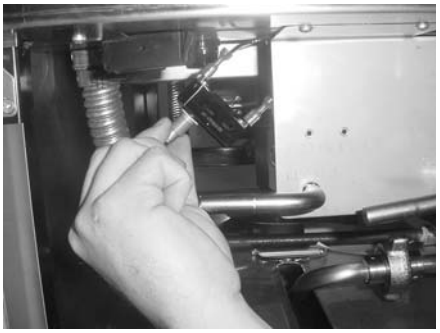

2. The following check should be made to determine if the drain microswitch is defective.

   a. Remove the two screws securing the microswitch to the drain rod valve bracket.

   b. Remove wires from the switch.

   c. Check for continuity across the two outside terminals of the drain switch. If the circuit is open, the drain switch is defective. The circuit should only be opened by pressing on the actuator of the drain switch.

3. Replace switch in reverse order.

2-8. FILTER SWITCH

1. Remove electrical power supplied to the unit.

To avoid electrical shock or property damage, move the POWER switch to OFF and disconnect main circuit breaker, or unplug cord at wall receptacle.

2. Remove the control panel above the switch.

3. Label and remove the wires from the switch. With test instrument, check across the terminals of the switch with the switch in the ON position, and then in the OFF position. With the switch in the ON position, the circuit should be closed. With the switch in the OFF position, the circuit should be open. If the switch checks defective, replace it by continuing with this procedure.

4. With wires removed from the switch, push in on tabs on the switch and remove switch from the panel.

5. Push new switch into panel and reconnect wires.

2-9. HEATING ELEMENTS

NOTICE

Heating elements are available for 208, 480 and 230 volts. Check data plate to determine correct voltage.

Checkout:
If the shortenings temperature recovery is very slow or at a slower rate than required, this may indicate defective heating element(s). An ohmmeter will quickly indicate if the elements are shorted or open.

1. Remove electrical power supplied to the frypot to be worked on.

WARNING
SHOCK HAZARD

To avoid electrical shock or property damage, move the POWER switch to OFF and disconnect main circuit breaker, or unplug cord at wall receptacle, to the frypot to be worked on. Be aware the other controls will have power.

2. Remove control panel.

3. Perform an ohm check on one element at a time, with wires disconnected from element. If the resistance is not within tolerance, replace the element.

Voltage	Wattage	Resistance Ohms (cold)
208	7333	5.6
240	7333	6.9
480	7333	27.5

Replacement:

NOTICE

Refer to figure 2-2.

1. Drain the shortening from the frypot.

2. Remove the high limit bulb holder from the heating element inside the frypot.

2-9. HEATING ELEMENTS (Continued)

3. Remove the heating element wires from the terminals by removing the nuts and washers. Label each so it can be replaced on the new element in the same position.

4. Remove the bolts from the five element spreaders. The element spreaders will now pull off the elements.

5. Remove the brass nuts and washers which secure the ends of the elements through the frypot wall.

6. Remove the heating elements from the frypot as a group by lifting the far end and sliding them up and out toward the rear of the frypot.

NOTICE

Always install new rubber O-rings when installing heater elements.

7. Install new heating elements with the new O-rings, terminal end first at approximately a 45° angle, slipping the terminals through the front wall of the frypot.

8. Replace the brass nuts and washers on the element terminals. Tighten the brass nuts to 30 foot lbs. of torque.

9. Evenly space the element spreaders on the sides of the elements and reinstall bolts. Place the fifth spreader in the front of the elements as to protect the temperature probe. (Fig.2-1

10. Replace the high limit bulb holder on the top element, and position the bulb between the top and second element midway from side to side, and tighten screw that holds the bulb in place.

11. Reconnect the wires to the appropriate terminal as labeled when they were removed.

12. Replace the front control panel.

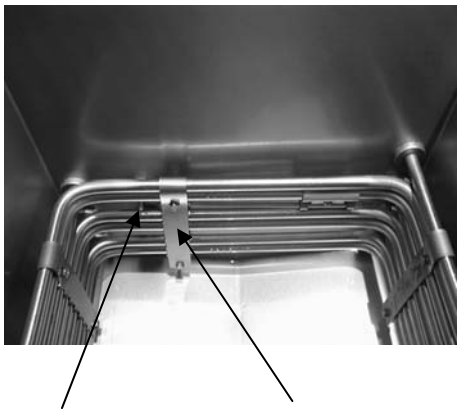

Fig. 2-1

2-9. HEATING ELEMENTS (Continued)

13. Connect the power cord to the wall receptacle or close wall circuit breaker.

CAUTION

Heating elements should never be energized without shortening in the frypot, or damage to the elements could result.

14. Replace the shortening in the frypot.

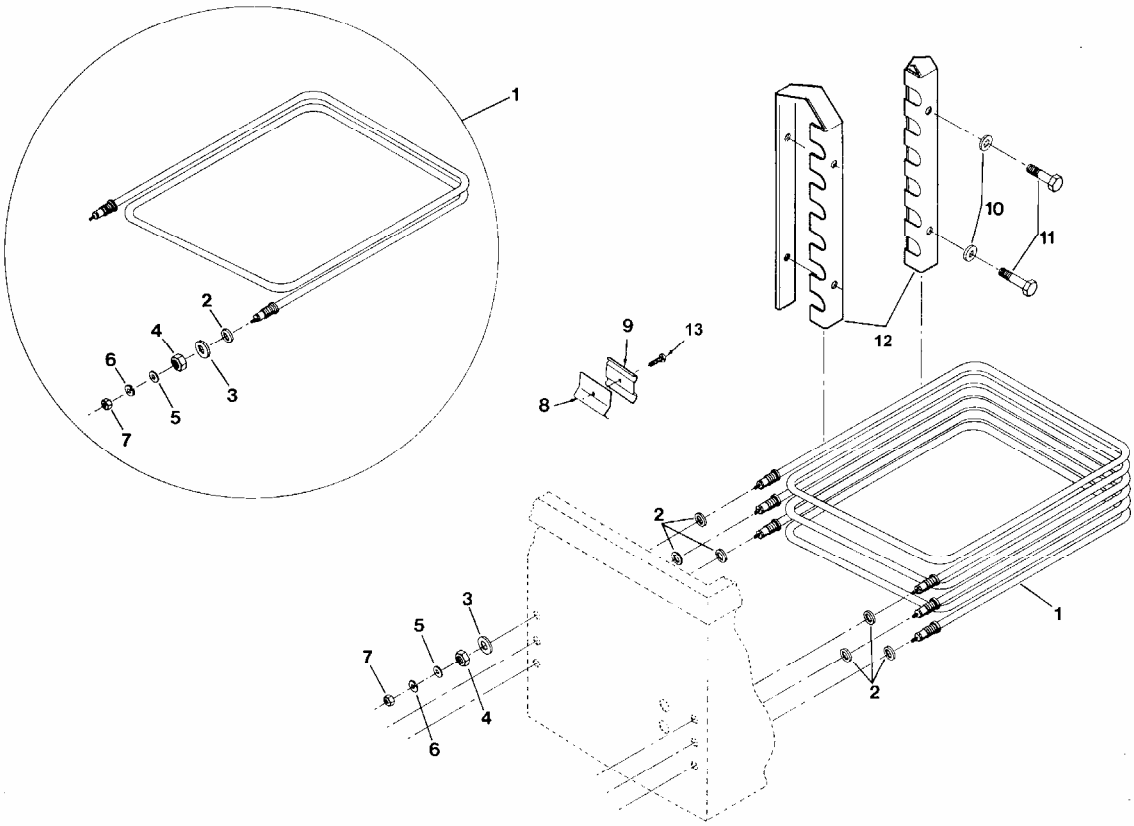

Fig. 2-2

2-10. HEATING CONTACTORS

Each well of an electric fryer requires two switching contactors. The first in line is the primary contactor and the second in line is the heat contactor. When open, the primary contactor does not allow power to flow to the heat contactor. When closed, the primary supplies voltage to the heat contactor. When the heat contactor is open, no voltage is supplied to the heating elements. When the heat contactor closes, voltage is supplied to the heating elements.

Checkout (Power Removed)

1. Remove electrical power supplied to the frypot to be worked on.

To avoid electrical shock or property damage, move the POWER switch to OFF and disconnect main circuit breaker, or unplug cord at wall receptacle, to the frypot to be worked on. Be aware the other controls will have power.

Electromechanical

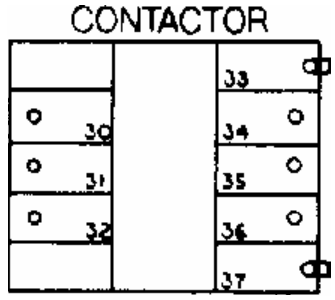

2. Remove the control panel.

3. Perform a check on the contactor as follows:

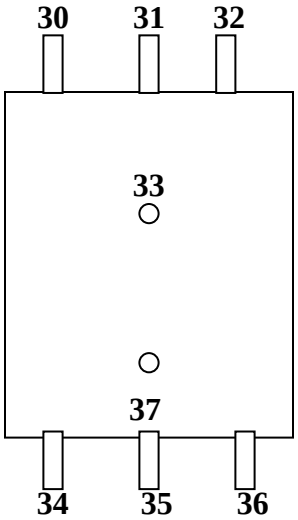

Mercury Contactor

ELECTROMECHANICAL CONTACTOR

Test Points	Results
From 30 to 34	open circuit
From 31 to 35	open circuit
From 32 to 36	open circuit
From 33 to 37	ohm reading 5 to 6

MERCURY CONTACTOR

Test Points	Results
From 30 to 34	open circuit
From 31 to 35	open circuit
From 32 to 36	open circuit
From 33 to 37	ohm reading 1700

NOTICE

Wires should be removed and labeled to obtain an accurate check of contactors.

2-10. HEATING CONTACTORS (Continued)

Checkout (Power Supplied)

To avoid electrical shock, make connections before applying power, take reading, and remove power before removing meter leads. The following checks are performed with the wall circuit breaker closed and the main power switch in the ON position.

1. Re-apply power to unit and turn POWER switch ON.

2. Using illustrations from previous page, check voltage as follows:

Test Points	Results
From terminal 34 to 35	The voltage should read
From terminal 35 to 36	the same at each terminal
From terminal 34 to 36	

Mercury Contactor Replacement:
If either contactor is defective it must be replaced as follows:

To avoid electrical shock or property damage, move the POWER switch to OFF and disconnect main circuit breaker, or unplug cord at wall receptacle, to the frypot to be worked on. Be aware the other controls will have power.

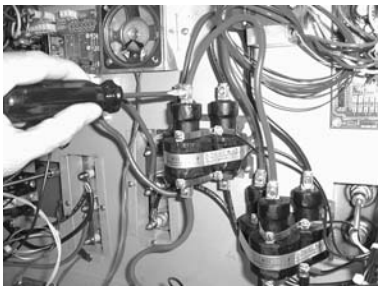

1. Remove only the wires directly connected to the contactor being replaced. Label the wires for replacement.

2. Loosen the screws securing the contactor bracket to the shroud.

3. Remove the contactor from the bracket.

4. Reinstall in reverse order.

2-10. HEATING CONTACTORS (Continued)

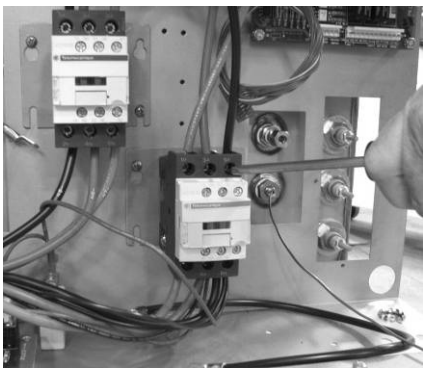

Electromechanical Contactor Replacement:
If either contactor is defective it must be replaced as follows:

To avoid electrical shock or property damage, move the POWER switch to OFF and disconnect main circuit breaker, or unplug cord at wall receptacle, to the frypot to be worked on. Be aware the other controls will have power.

1. Remove only the wires directly connected to the contactor being replaced. Label the wires for replacement.
2. Remove nuts securing the contactor to the shroud.
3. Remove the contactor from unit.
4. Reinstall in reverse order.

2-11. SPEAKER ASSEMBLY

The speaker assembly emits audible signals to let the operator know when cooking and hold times are finished.

1. Remove electrical power supplied to unit.

To avoid electrical shock or property damage, move the POWER switch to OFF and disconnect main circuit breaker, or unplug cord at wall receptacle.

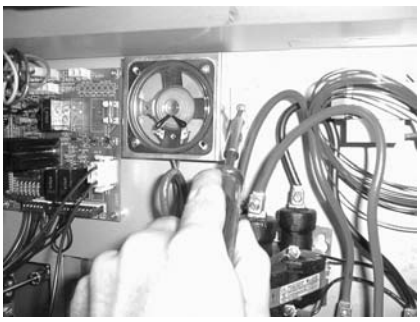

2. Remove control panel.
3. Follow the speaker wire and disconnect from control board.
4. Remove the screws securing the speaker bracket to the shroud.
5. Remove the speaker from the bracket.
6. Reinstall in reverse order.

2-12. HIGH TEMPERATURE LIMIT CONTROL

The electric units, models OFE-321/2/3/4, use the same high temperature control limits as the gas units, but the mounting of the capillary tube is different on the electric units compared to the gas units.

Checkout:
Use the same procedure as in the High Limit Temperature Control (Gas) Section.

NOTICE

Use replacement high limit, part no. 60241, 425 degree.

Replacement:

WARNING
SHOCK HAZARD

To avoid electrical shock or property damage, move the POWER switch to OFF and disconnect main circuit breaker, or unplug cord at wall receptacle, to the frypot to be worked on. Be aware the other controls will have power.

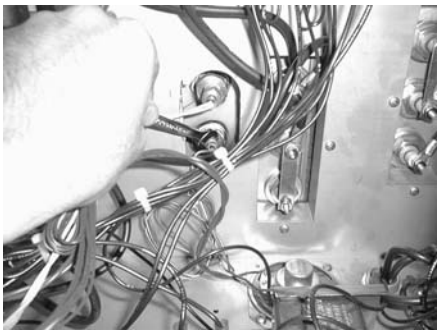

1. Drain the shortening from the frypot.
2. Remove control panel.
3. Loosen small inside screw nut on capillary tube.

4. Remove capillary bulb from bulb holder inside the frypot.
5. Straighten the capillary tube.
6. Remove larger outside nut that threads into pot wall.

7. Remove the two screws that secure the high limit to the high limit bracket.
8. Remove the defective control from the control panel area.

2-12. HIGH TEMPERATURE LIMIT CONTROL (Continued)

9. Insert new 425 degree high limit, part no. 60241 and replace screws.

10. Uncoil capillary tube, starting at control, and insert through pot fitting.

To avoid electrical shock or other injury, run the capillary line under and away from all electrical power wires and terminals. The tube must NEVER be in such a position where it could accidentally touch the electrical power terminals.

11. Carefully bend the capillary bulb and tube toward bulb holder on heating elements.

12. Slip capillary bulb into bulb holder on heating elements. Pull excess capillary line from pot and tighten nut into frypot wall.

CAUTION

Be sure capillary bulb of high limit is located behind capillary bulb of thermostat. Both capillary bulbs and bulb holders should be positioned as not to interfere with basket or when cleaning the frypot wall, or damage to capillary tube could result.

13. With excess capillary line pulled out, tighten smaller nut hand tight, then ¼ turn with wrench.

14. Replace front panel.

15. Refill with shortening.

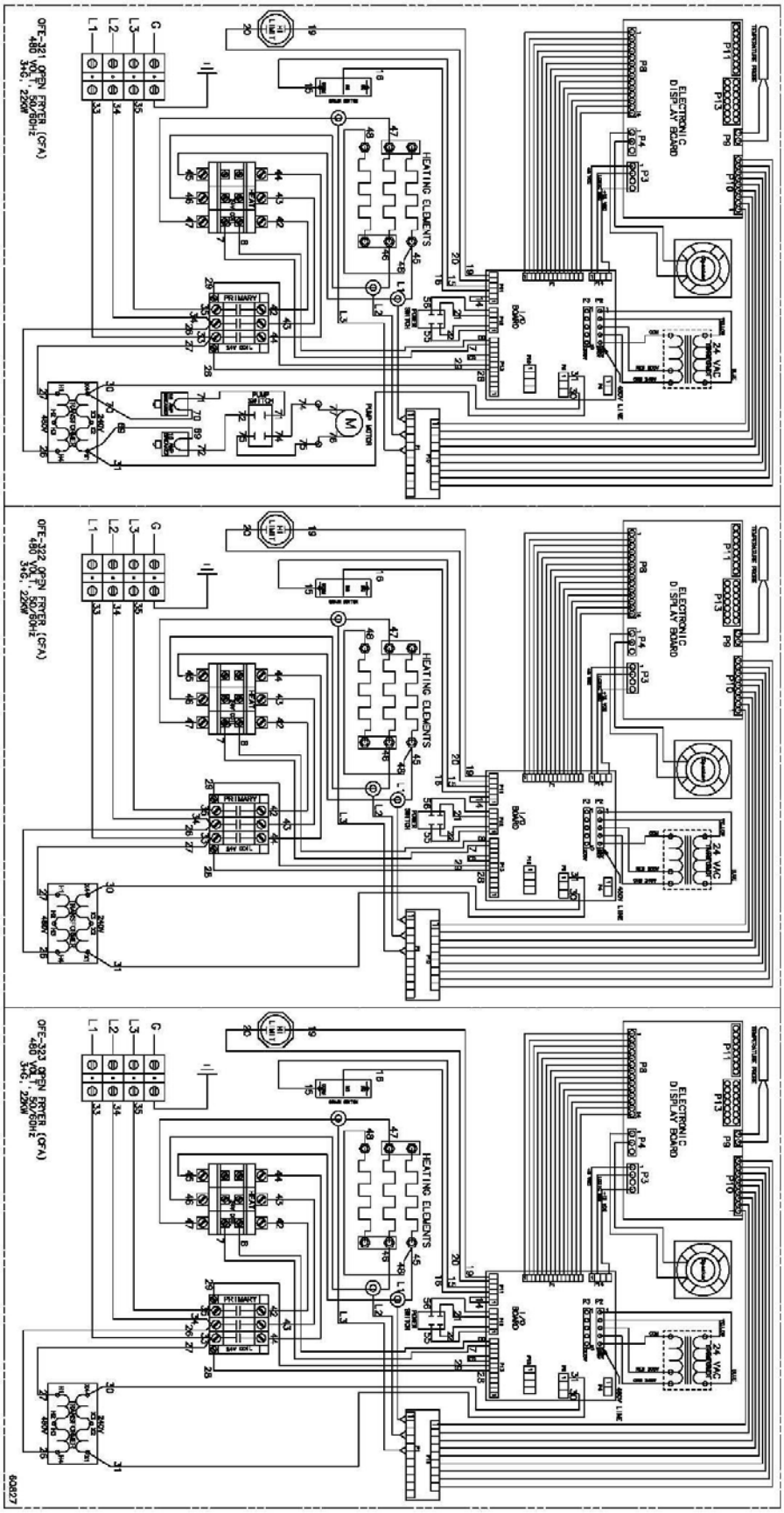
OFE-321 OPEN FRYER (OFA)
480 VAC, 3PH, 60Hz
OFE-322 OPEN FRYER (OFA)
480 VAC, 3PH, 60Hz
OFE-323 OPEN FRYER (OFA)
480 VAC, 3PH, 60Hz
HEATING ELEMENTS
ELECTRONIC DISPLAY BOARD
I/O BOARD
24 VAC
PRIMARY
PUMP MOTOR
HI LIMIT
TEMPERATURE PROBE
480V LINE
602627

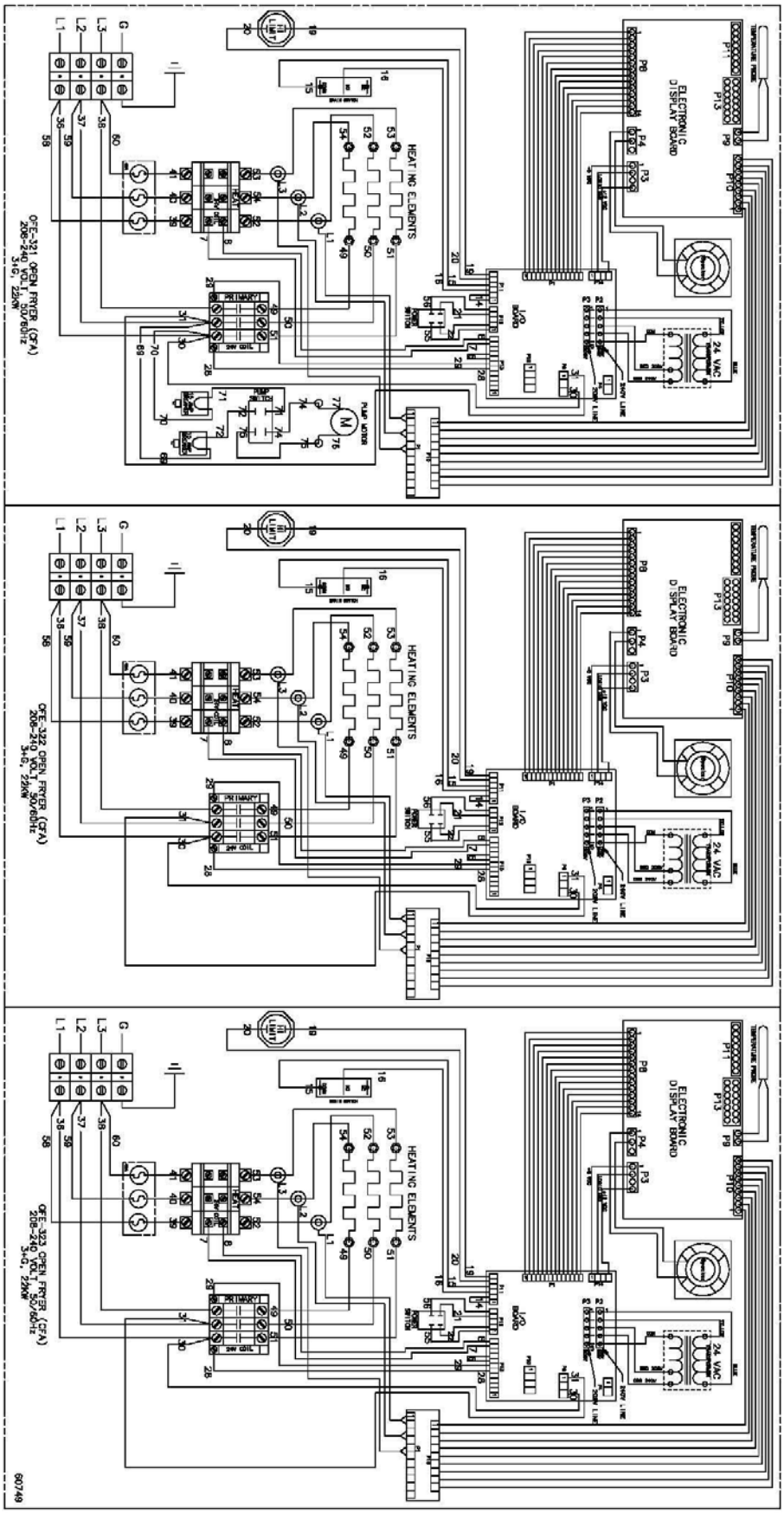
OFE-321 OPEN FRYER (CFA)
208-240 VOLT, 50/60Hz
3-Ø, 22kW
OFE-322 OPEN FRYER (CFA)
208-240 VOLT, 50/60Hz
3-Ø, 22kW
OFE-323 OPEN FRYER (CFA)
208-240 VOLT, 50/60Hz
3-Ø, 22kW
HEATING ELEMENTS
ELECTRONIC DISPLAY BOARD
PRIMARY
24 VAC
PUMP MOTOR
60749

LIMITED WARRANTY FOR HENNY PENNY APPLIANCES

Subject to the following conditions, Henny Penny Corporation makes the following limited warranties to the original purchaser only for Henny Penny appliances and replacement parts:

NEW EQUIPMENT: Any part of a new appliance, except lamps and fuses, which proves to be defective in material or workmanship within two (2) years from date of original installation, will be repaired or replaced without charge F.O.B. factory, Eaton, Ohio, or F.O.B. authorized distributor. To validate this warranty, the registration card for the appliance must be mailed to Henny Penny within ten (10) days after installation.

REPLACEMENT PARTS: Any appliance replacement part, except lamps and fuses, which proves to be defective in material or workmanship within ninety (90) days from date of original installation will be repaired or replaced without charge F.O.B. factory, Eaton, Ohio, or F.O.B. authorized distributor.

The warranty for new equipment and replacement parts covers only the repair or replacement of the defective part and does not include any labor charges for the removal and installation of any parts, travel or other expenses incidental to the repair or replacement of a part.

EXTENDED FRYPOT WARRANTY: Henny Penny will replace any frypot that fails due to manufacturing or workmanship issues for a period of up to seven (7) years from date of manufacture. This warranty shall not cover any frypot that fails due to any misuse or abuse, such as heating of the frypot without shortening.

0 TO 3 YEARS: During this time, any frypot that fails due to manufacturing or workmanship issues will be replaced at no charge for parts, labor, or freight. Henny Penny will either install a new frypot at no cost or provide a new or reconditioned replacement fryer at no cost.

3 TO 7 YEARS: During this time, any frypot that fails due to manufacturing or workmanship issues will be replaced at no charge for the frypot only. Any freight charges and labor costs to install the new frypot as well as the cost of any other parts replaced, such as insulation, temperature temperature probes, high limits, fittings, and hardware, will be the responsibility of the owner.

Any claim must be represented to either Henny Penny or the distributor from whom the appliance was purchased. No allowance will be granted for repairs made by anyone else without Henny Penny's written consent. If damage occurs during shipping, notify the sender at once so that a claim may be filed.

THE ABOVE LIMITED WARRANTY SETS FORTH THE SOLE REMEDY AGAINST HENNY PENNY FOR ANY BREACH OF WARRANTY OR OTHER TERM. BUYER AGREES THAT NO OTHER REMEDY (INCLUDING CLAIMS FOR ANY INCIDENTAL OR CONSQUENTIAL DAMAGES) SHALL BE AVAILABLE.

The above limited warranty does not apply (a) to damage resulting from accident, alteration, misuse, or abuse; (b) if the equipment's serial number is removed or defaced; or (c) for lamps and fuses. THE ABOVE LIMITED WARRANTY IS EXPRESSLY IN LIEU OF ALL OTHER WARRANTIES, EXPRESS OR IMPLIED, INCLUDING MERCHANTABILITY AND FITNESS, AND ALL OTHER WARRANTIES ARE EXCLUDED. HENNY PENNY NEITHER ASSUMES NOR AUTHORIZES ANY PERSON TO ASSUME FOR IT ANY OTHER OBLIGATION OR LIABILITY.

SECTION 3. PARTS INFORMATION

3-1. INTRODUCTION

This section lists the replaceable parts of the Henny Penny OFE-321 & 322 Open Fryers.

3-2. GENUINE PARTS

Use only genuine Henny Penny parts in your fryer. Using a part of lesser quality or substitute design may result in damage to the unit or personal injury.

3-3. WHEN ORDERING PARTS

Once the parts that you want to order have been found in the parts list, write down the following information:

Item Number	8	
Part Number	31561	Example:
Description	On/Off Switch	

From the data plate, list the following information:

Product Number	01400	
Serial Number	0001	Example:
Voltage	208	

3-4 PRICES

Your distributor has a price parts list and will be glad to inform you of the cost of your parts order.

3-5 DELIVERY

Commonly replaced items are stocked by your distributor and will be sent to you when your order is received. Other parts will be ordered, by your distributor, from Henny Penny Corporation. Normally, these will be sent to your distributor within three working days.

3-6 WARRANTY

All replacement parts (except lamps and fuses) are warranted for 90 days against manufacturing defects and workmanship. If damage occurs during shipping, notify the carrier at once so that a claim may be properly filed. Refer to warranty in the front of this manual for other rights and limitations.

3-7. RECOMMENDED SPARE PARTS FOR DISTRIBUTORS

Recommended replacement parts, stocked by your distributor, are indicated with √ in the parts lists. Please use care when ordering recommended parts, because all voltages and variations are marked. Distributors should order parts based upon common voltages and equipment sold in their territory.

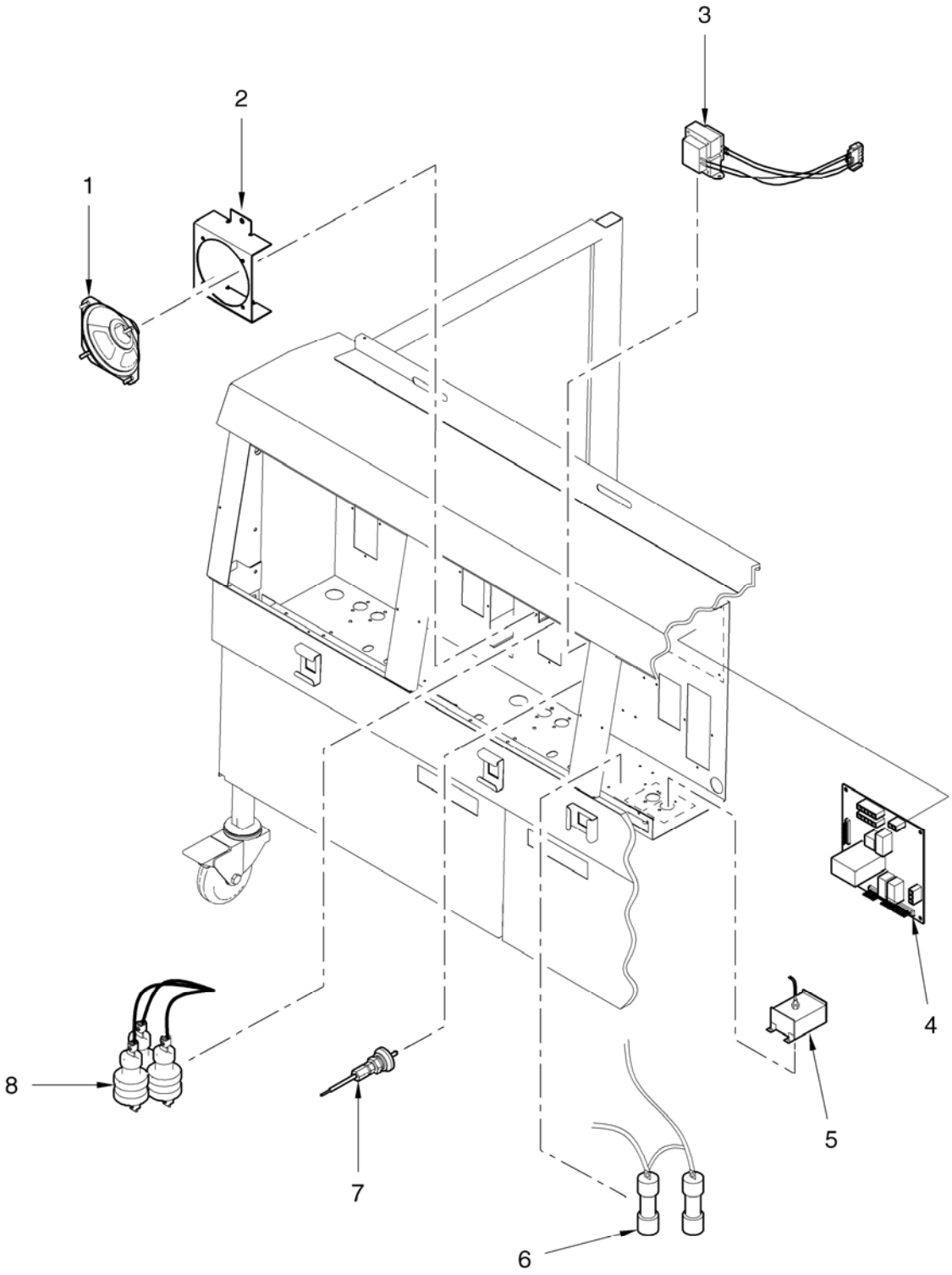

Figure 3-1. Electric Heat Controls

FIGURE & ITEM NO.	PART NO.	DESCRIPTION	QTY. PER UNIT 321	322
3-1		ELECTRIC HEAT CONTROLS		
√ 1	26863	SPEAKER ASSY	1	2
√ 2	24916	SPEAKER BRACKET ASSY.	1	2
√ 3	60536	24V/230V TRANSFORMER ASSY.	1	2
√ 4	27286RB	I/O BOARD ASSY.	1	2
√ 5	60241	425° HIGH LIMIT ASSY.	1	2
√ 6	EF02-006	20A 250V FUSE HOLDER	2	4
√ 6	EF02-007	15 AMP FUSE (SN: BA0608031 & below)	2	4
√ 6	EF02-125	BREAKER-PUSH BUTTON RESET (SN: BA0608032 & after)	2	4
√ 7	14776	KIT – ELECTRIC TEMP PROBE	1	2
√ 8	29509	KIT–E/M 24V CONTACTOR–PRIMARY	1	2
√ 8	29510	24V MERCURY CONTACTOR (SN: BA08010019 & BEFORE)	1	2
√ 8	65073	CONTACTOR – E/M (SN: BA08010020 & AFTER)	1	2
9*	60810	I/O BOARD TO CONTROL CABLE - 4 PIN	1	2
10*	60838	TRANSFORMER -480V TO 240V - OFE-322	-	2
11*	60847	TRANSFORMER MOUNTING BRACKET	-	2
12*	19923	TRANSFORMER-LARGE--480V-240V - OFE-321	1	-
√ 13*	60722	BLOCK – 60 AMP FUSE (208-240V FRYERS)	1	2
√ 14*	14970	KIT-60 AMP FUSE RETROFIT (208-240V FRYERS)	1	2
√ 15*	24347	ASSEMBLY – CURRENT SENSE XFORMERS	1	2
√ 16*	27290	ASSEMBLY – CURRENT SENSE PCB	1	2

√ recommended parts
*not shown

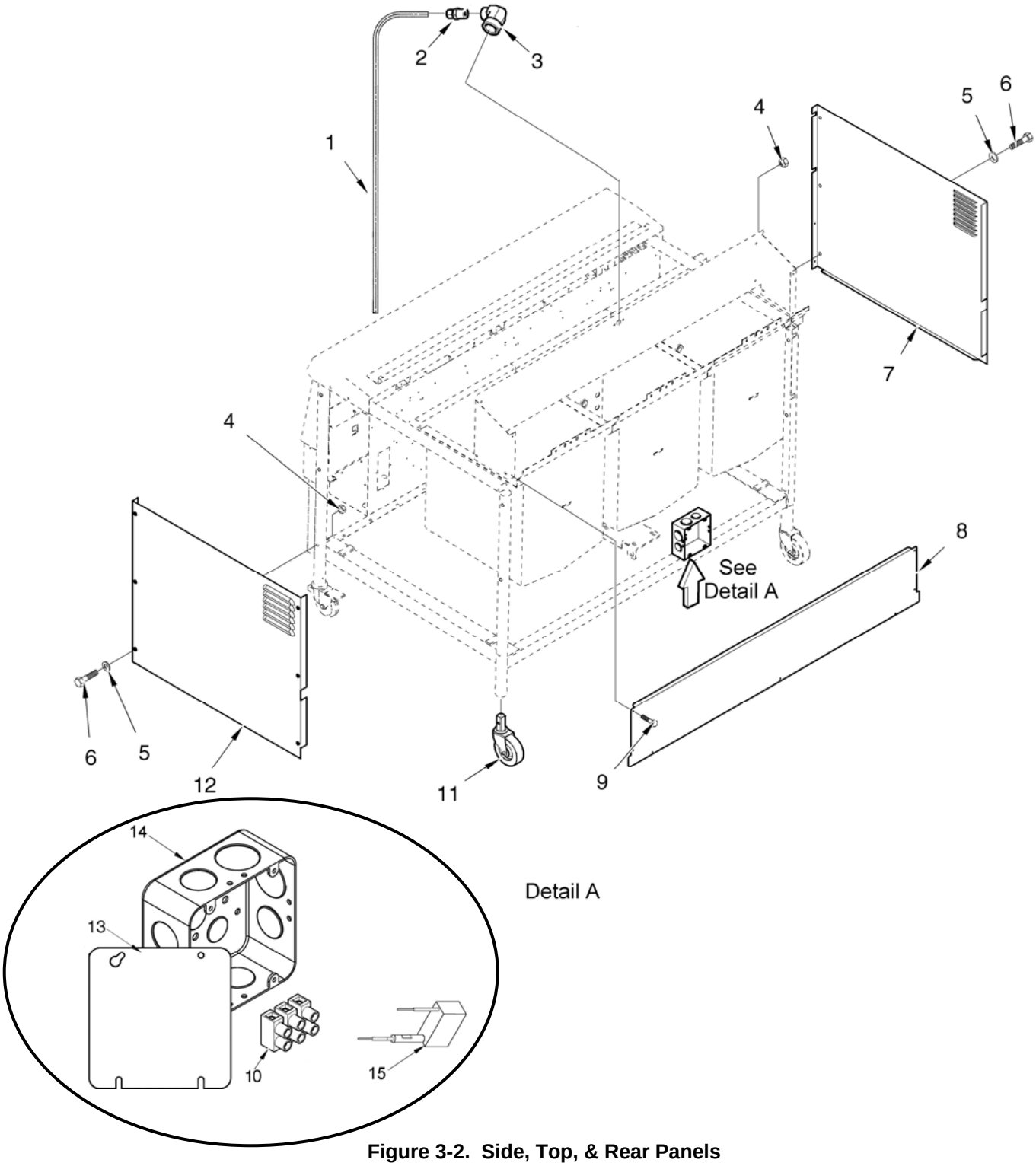

Figure 3-2. Side, Top, & Rear Panels

FIGURE & ITEM NO.	PART NO.	DESCRIPTION	QTY. PER UNIT 321	322
3-2		SIDE, TOP, AND REAR PANELS		
1	26901	TUBE, OIL RETURN LINE – OFE-322 (before 12-1-06)	-	1
1	73957	TUBE, OIL RETURN LINE – OFE-322 (after 12-1-06)	-	1
2	FP01-082	CONNECTOR - 3/8 TUBE TO ½ NPT SS– OFE-322	-	2
3	FP01-087	ELBOW– OFE-322	-	1
4	NS02-002	NUT, END PANEL RETAINING	6	6
5	WA01-002	FLAT WASHER	6	6
6	SC01-216	SCREW	6	6
7	60552	SIDE PANEL, RH	1	1
8	59042	TOP REAR COVER (2 WELL)	-	1
8	59043	TOP REAR COVER (1 WELL)	1	-
9	SC03-005	SCREW, BOX RETAINING	2	2
10	63097	TERMINAL BLOCK – 2 POLE	1	1
11	60312	CASTER 4 IN. W/O BRAKE	2	2
12	60551	SIDE PANEL, LH	1	1
13	26877	COVER – JUNCTION BOX – 32X - CFA	1	1
14	26876	BOX – JUNCTION – 32X – CFA	1	1
15	36012	ASSY – CAPACITOR/RESISTOR	1	1

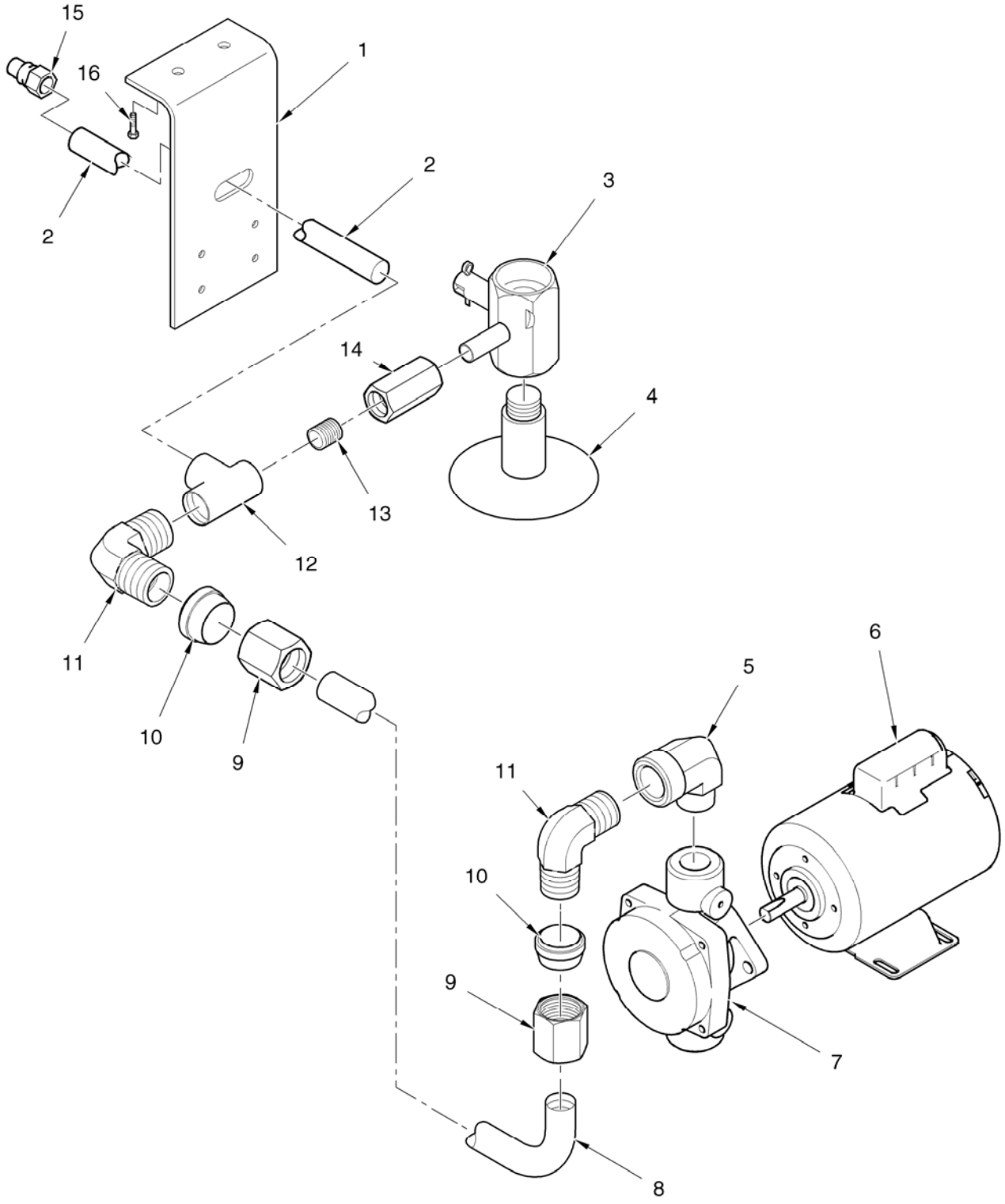

Figure 3-3. Oil Filtering System

FIGURE & ITEM NO.	PART NO.	DESCRIPTION	QTY. PER UNIT 321	322
3-3		OIL FILTERING SYSTEM		
1	66005	FRONT PLATE	1	-
2	17320	PIPE, FRONT	1	-
3	55152	DRAIN VALVE & COUPLING ASSY.	1	2
4	60736	DRAIN VALVE EXT. (ELECT.) (SN: GM024JB & BELOW)	1	2
4	24643	DRAIN VALVE EXT. (ELECT.) (SN: GM025JB & ABOVE)	1	2
5	16239	ELBOW, FILTER PUMP	1	-
6	67589	ASSY – FILTER PUMP & MOTOR	1	1
6	67583	FILTER PUMP MOTOR, 1/2 HP	1	1
7	17437	FILTER PUMP	1	1
8	26966	ASSY – POT TO PUMP TUBE – OFE-321	1	-
9	16809	NUT, FILTER TO VALVE TUBE	2	-
10	16808	FERRULE, FILTER TO VALVE TUBE	2	-
11	17407	ELBOW, FILTER PUMP TUBE	1	-
12	17306	TEE	1	-
13	50715	NIPPLE	1	-
14	17308	VALVE, FILTER	1	-
15	17334	QUICK CONNECT FITTING	1	-
16	SC03-005	SCREW, PLATE RETAINING	2	-

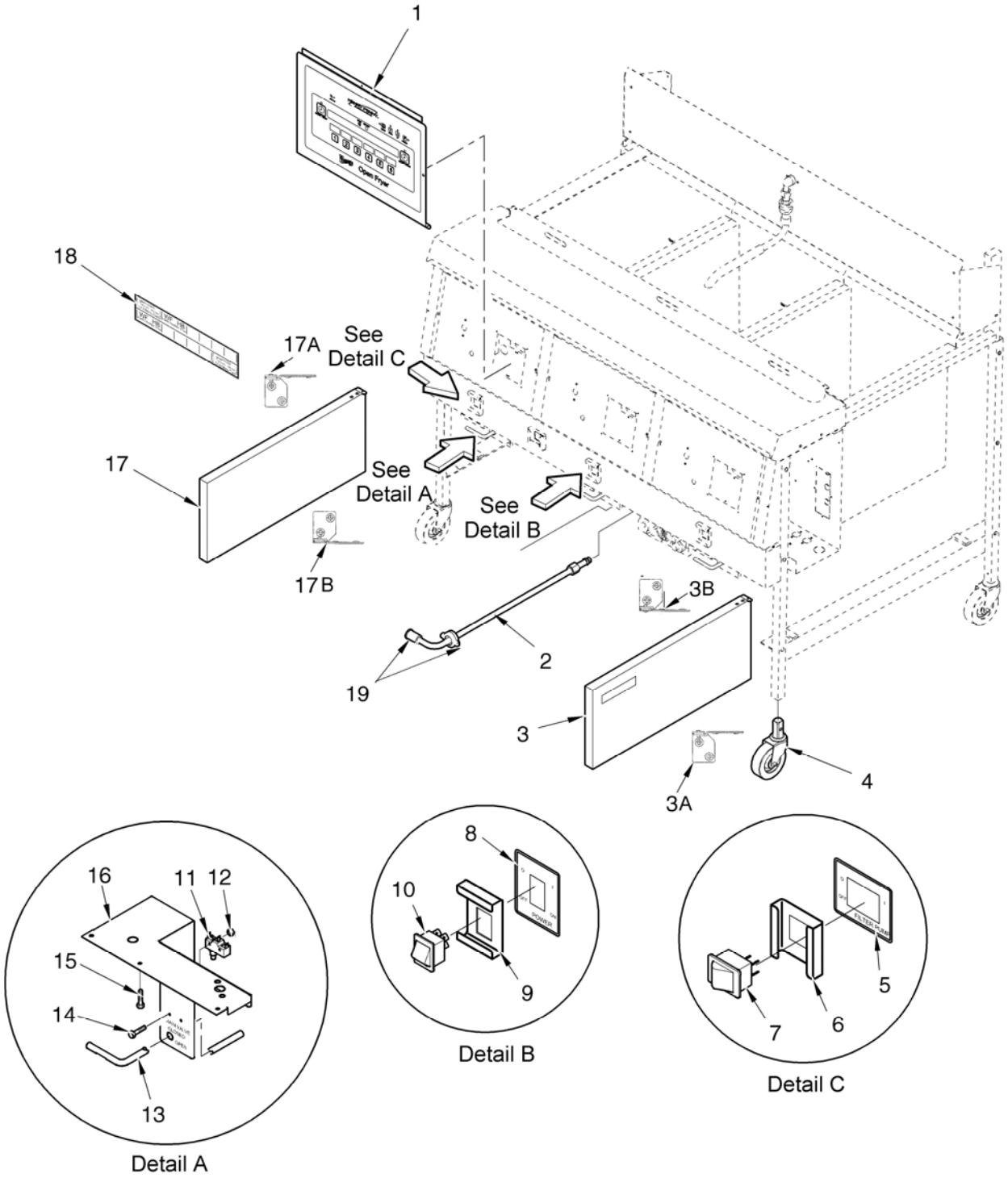

Figure 3-4. Door, Switches, Menu Card, & Control Board

FIGURE & ITEM NO.	PART NO.	DESCRIPTION	QTY. PER UNIT 321	322
3-4		DOOR, SWITCHES, MENU CARD, & CONTROL BOARD		
√ 1	67924RB	12 TIMER CONTROL BOARD ASSY.	1	2
2	60442	FILTER TO PUMP TUBE ASSY.	1	1
3	71874	RIGHT DOOR ASSY. (2 WELL) (SN: BA0604017 & above)	-	1
3	60501	RIGHT DOOR ASSY. (2 WELL) (SN: BA0604016 & below)	-	1
3A	17618	HINGE – DOOR – TOP	-	1
3B	17620	HINGE – DOOR – BOTTOM	-	1
4	52064	4 IN. SWIVEL CASTER W/ BRAKE	2	2
5	60609	DECAL, FILTER POWER SWITCH	1	1
6	60844	SWITCH GUARD, FILTER SWITCH	1	1
√ 7	43768	FILTER SWITCH	1	1
8	60608	DECAL, MAIN POWER SWITCH (321-SN: BA0604010 & below; 322-SN: BA0604001 & below)	1	2
8	72677	DECAL, MAIN POWER SWITCH (321-SN: BA0604011 & above; 322-SN: BA0604002 & above)	1	2
9	60844	SWITCH GUARD, POWER SWITCH	1	2
√ 10	72277	POWER SWITCH ASSY.	1	2
√ 11	18227	DRAIN MICROSWITCH	1	2
11	14681	KIT – OFE-321 N/O DRAIN SWITCH-CONVERSION	1	-
11	14651	KIT – OFE-322 N/O DRAIN SWITCH-CONVERSION	-	1
12	NS02-005	NUT	2	4
13	18818	DRAIN VALVE EXTENSION ROD	1	2
13	74193	ROD – N/O 320 DRAIN	1	2
14	SC01-058	SCREWS, COVER & BRACKET RETAINING (6-32 X 1.5 IN.)	2	4
15	SC03-005	SCREWS, BRACKET RETAINING	2	4
16	60718	DRAIN SWITCH BRACKET (OFE-322)	-	2
16	24802	DRAIN SWITCH BRACKET (OFE-321)	1	-
17	71875	LEFT DOOR ASSY. (2 WELL) (SN: BA0604017 & above)	-	1
17	60502	LEFT DOOR ASSY. (2 WELL) (SN: BA0604016 & below)	-	1
17	71870	DOOR ASSY. (1 WELL) (SN: BA0604017 & above)	1	-
17	60542	DOOR ASSY. (1 WELL) (SN: BA0604016 & below)	1	-
17A	17618	HINGE – DOOR – TOP	1	1
17B	17620	HINGE – DOOR – BOTTOM	1	1
18	61724	CFA MENU CARD	1	2
√ 19	69289	ASSY – FILTER UNION	1	1
20*	18911	FILTER VALVE HANDLE (OFE-321)	1	-
21*	17002	DOOR MAGNET	1	2
22*	60503	BRKT – MAGNET	1	2
23*	SC03-005	SCREWS	2	4

√ recommended parts
*not shown

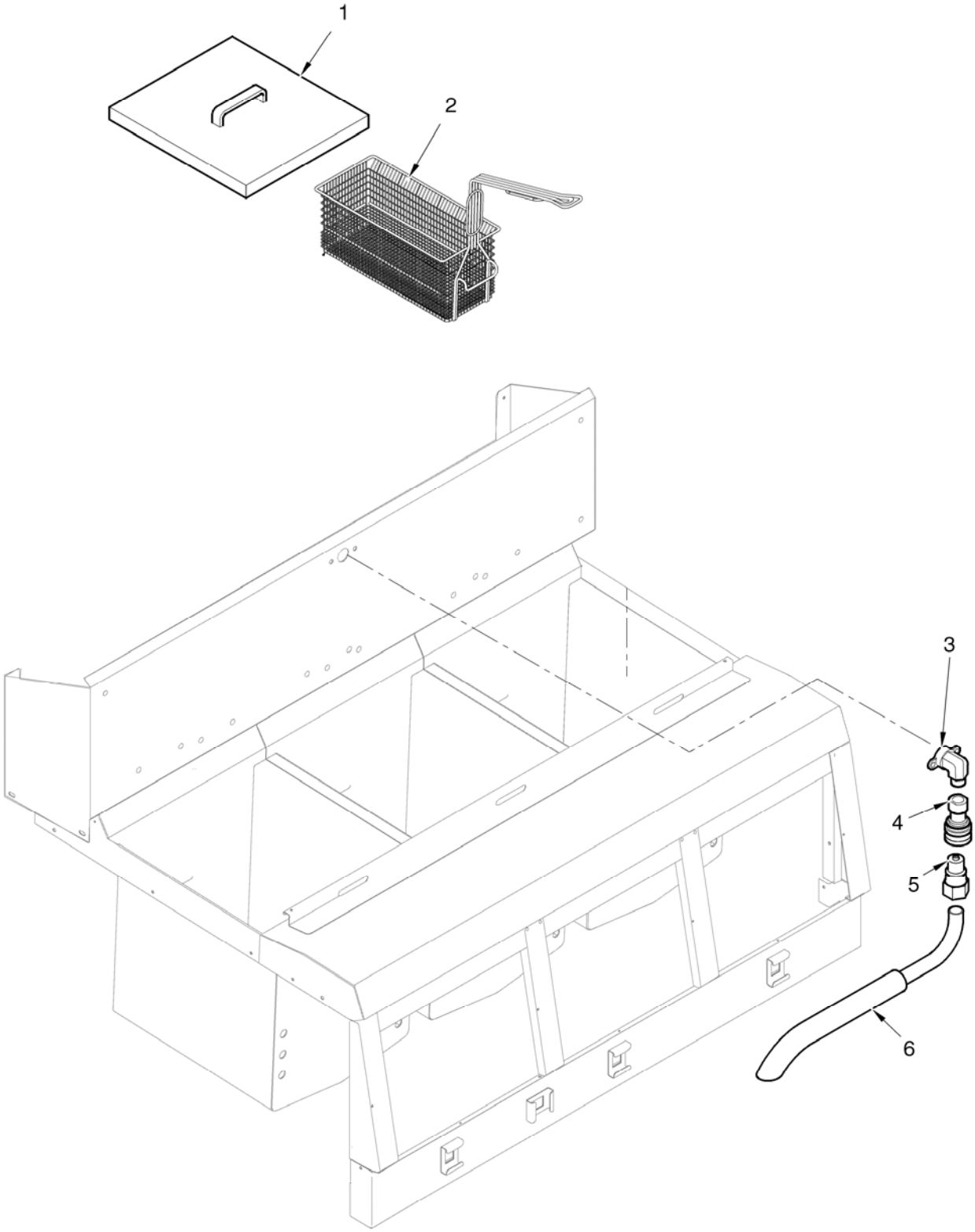

Figure 3-5. Baskets and Return Faucet

FIGURE & ITEM NO.	PART NO.	DESCRIPTION	QTY. PER UNIT 321	322
3-5		BASKETS AND RETURN FAUCET		
1	26873	FRYPOT COVER	1	2
2	21033	HALF SIZE BASKET	2	4
2	69085	HALF SIZE BASKET – FRONT & REAR HOOK	2	4
3	FP01-087	ELBOW, MALE, 3/8 IN.	1	1
4	17333	FEMALE DISCONNECT	1	1
5	17334	MALE DISCONNECT	1	1
6	70560	ASSY-RETURN FAUCET W/MALE DISCONNECT-322	-	1

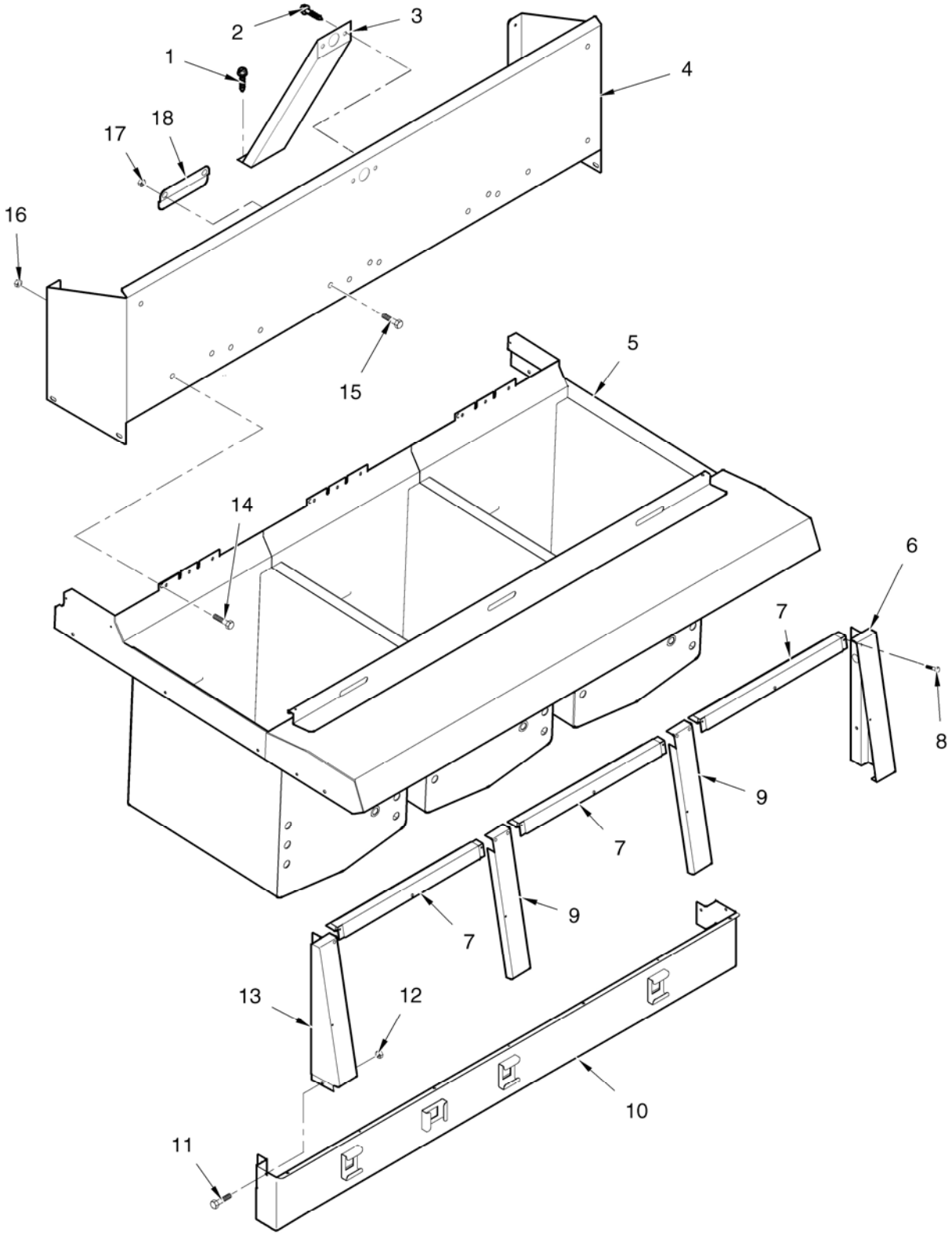

Figure 3-6. Shrouds and Pot & Counter Top

FIGURE & ITEM NO.	PART NO.	DESCRIPTION	QTY. PER UNIT 321	322
3-6		SHROUDS AND POT & COUNTER TOP		
1	SC03-005	SCREW, BRACKET RETAINING, BOTTOM	2	2
2	SC01-034	SCREW, BRACKET RETAINING, TOP	2	2
3	60340	BRACKET, REAR SHROUD	1	2
4	63700	REAR SHROUD ASSY.	1	-
4	26870	REAR SHROUD ASSY.	-	1
5	24899	POT & COUNTERTOP ASSY. (OFE-321)	1	-
5	24896	POT & COUNTERTOP ASSY. (OFE-322)	-	1
6	60322	SHROUD CONTROL VERTICAL RH	1	1
7	60328	SHROUD CONTROL UPPER MIDDLE	-	2
8	SC04-003	SCREW	4	9
9	60326	SHROUD CONTROL DIVIDER	-	1
10	71938	BOTTOM SWITCH GUARD (SN: BA0604017 & above)	1	-
10	60605	BOTTOM SWITCH GUARD (SN: BA0604016 & below)	1	-
10	69634	BOTTOM SWITCH GUARD (SN: BA0604017 & above)	-	1
10	60606	BOTTOM SWITCH GUARD (SN: BA0604016 & below)	-	1
11	SC1-034	SCREW	2	2
12	NS02-007	NUT	2	2
13	60324	SHROUD CONTROL VERTICAL LH	1	1
14	SC03-005	SCREW, SHROUD RETAINING	4	4
15	N02-006	NUT, SHROUD RETAINING	4	6
16	N02-006	NUT, RETAINER SECURING	-	2
17	33261	REAR SHROUD RETAINER	-	1

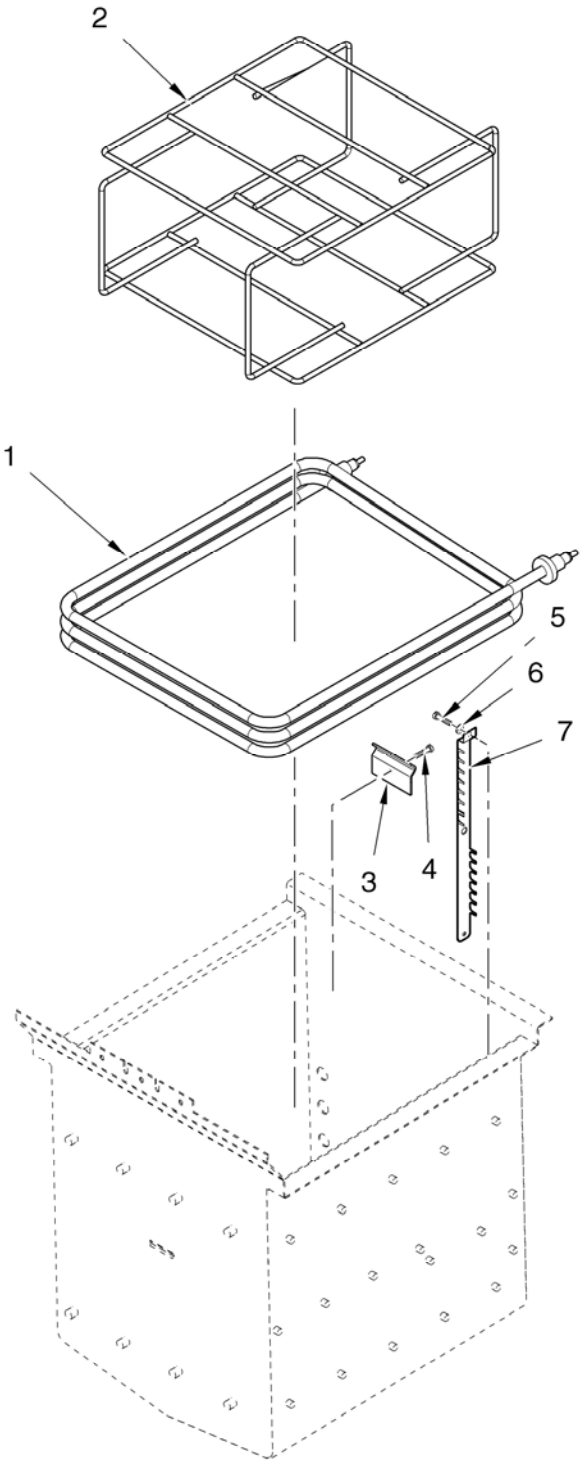

Figure 3-7. Electric Heater

FIGURE & ITEM NO.		PART NO.	DESCRIPTION	QTY. PER UNIT 321	322
	3-7		ELECTRIC HEATER		
√	1	30292-2	HEATING ELEMENT – 208V 7333W	3	6
√	1	30292-6	HEATING ELEMENT – 240V 7333W	3	6
√	1	30292-1	HEATING ELEMENT – 480V 7333W	3	6
	2	26917	FRY BASKET SUPPORT	1	2
	3	40315	HI LIMIT REAR CLAMP	1	2
	3	40317	HI LIMIT FRONT CLAMP	1	2
	4	SC01-053	CLAMP SCREW (#8-32 X 1/2 IN.)	1	2
	5	SC01-055	SPREADER SCREW (#10-32 X 3/4 IN.)	10	20
	6	LW02-005	LOCKWASHER, #10 INTERNAL	10	20
	7	51931	SPREADER BAR ASSY.	5	10

√ recommended parts

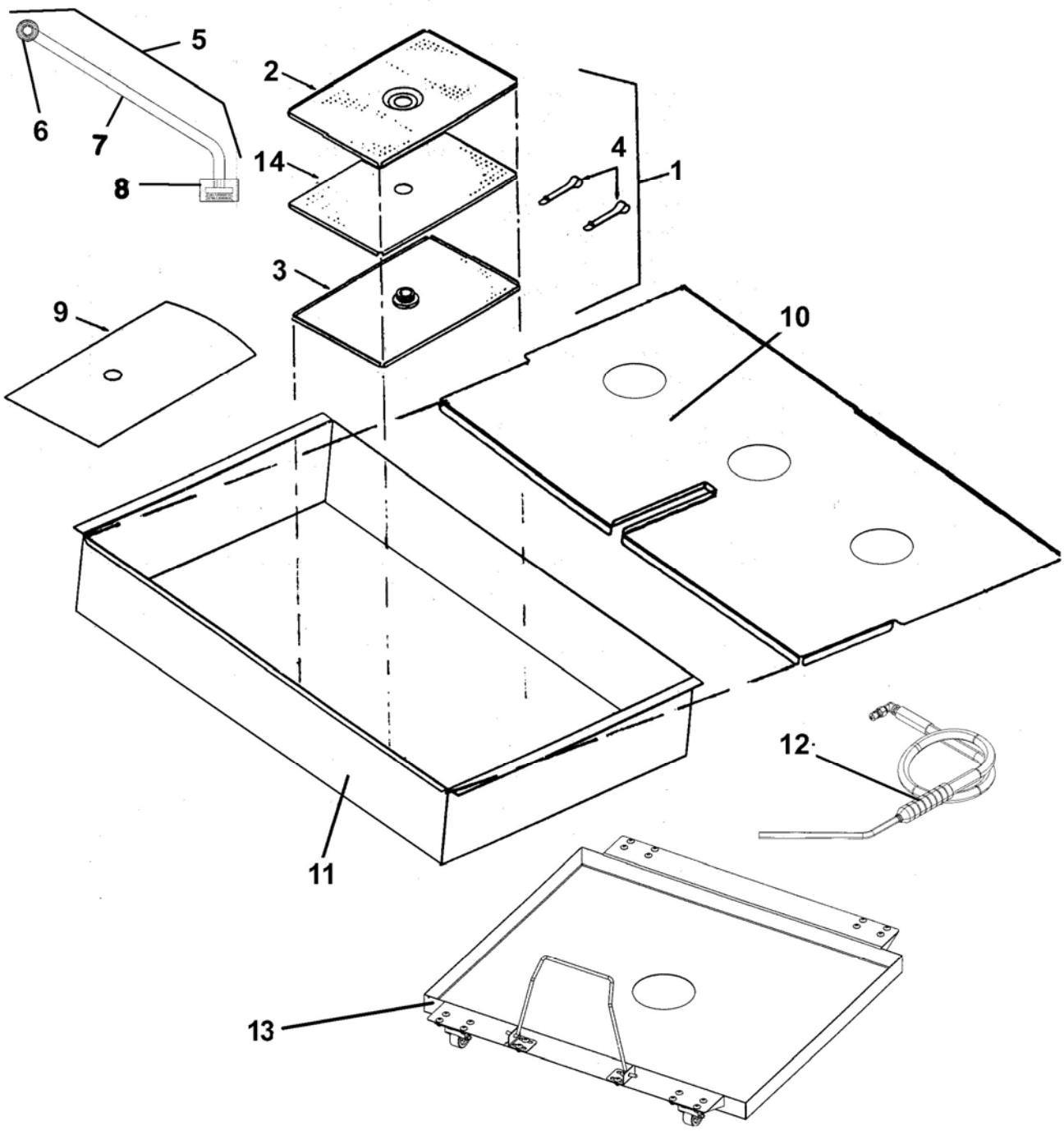

Figure 3-8. Drain Pan, Screen, and Cover

FIGURE & ITEM NO.	PART NO.	DESCRIPTION	QTY. PER UNIT 321	322
3-8		DRAIN PAN, SCREEN, & COVER		
1	14671	KIT – 32X SS FILTER SCREEN ASSY (INCLUDES #8)	1	1
2	65211	CRUMB CATCHER	1	1
3	65447	BOTTOM FILTER SCREEN	1	1
4	17505	FILTER ENVELOPE CLIPS	2	2
5	69118	ASSY-32X SS FILTER SCREEN PIPE	1	1
√ 6	69289	ASSY – FILTER UNION	1	1
7	70360	STANDPIPE TUBE (SN: BA0604017 & above)	1	1
7	60377	STANDPIPE TUBE (SN: BA0604016 & below)	1	1
8	65208	NUT, FILTER - SS	1	1
9	12102	FILTER ENVELOPE PAPER	5	5
10	81123	DRAIN PAN COVER (321) (SN: 10/7/08 & AFTER)	1	-
10	71597	DRAIN PAN COVER (321) (SN: BA0604017 to 10/7/08)	1	-
10	21064	DRAIN PAN COVER (321) (SN: BA0604016 & below)	1	-
10	71599	DRAIN PAN COVER (322, SN: BA0604017 & above)	-	1
10	24596	DRAIN PAN COVER (322, SN: GM046JB-BA0604016)	-	1
10	60460	DRAIN PAN COVER (322, SN: GM045JB & below)	-	1
11	21088	DRAIN PAN (321) (SN: BA0604016 & below)	1	-
11	70344	DRAIN PAN (321) (BA0604017 to BA0810007)	1	-
11	81120	DRAIN PAN (321) (BA0810008 & ABOVE)	1	
11	66522	DRAIN PAN (322) (SN: BA0604017 & below)	-	1
11	70345	DRAIN PAN (322) (SN: BA0604018 & above)	-	1
12	03003	RINSE HOSE ASSY.	1	1
13	03495	DRAIN PAN DOLLY–321(SN: BN0604042 & BELOW)	1	-
13	03548	DRAIN PAN DOLLY–321(SN: BN0604043 TO 10/6/08)	1	-
13	70360	DRAIN PAN DOLLY–321(SN: 10/7/08 & AFTER)	1	-
13	03496	DRAIN PAN DOLLY–322 (SN: BN0604031 & BELOW)	-	1
13	03549	DRAIN PAN DOLLY–322 (SN: BN0604032 & ABOVE)	-	1
14	17502(USE 14671)	TOP FILTER SCREEN	1	1

√ recommended parts

NOTICE

If unit has 3 filter screens, use part no. 14671

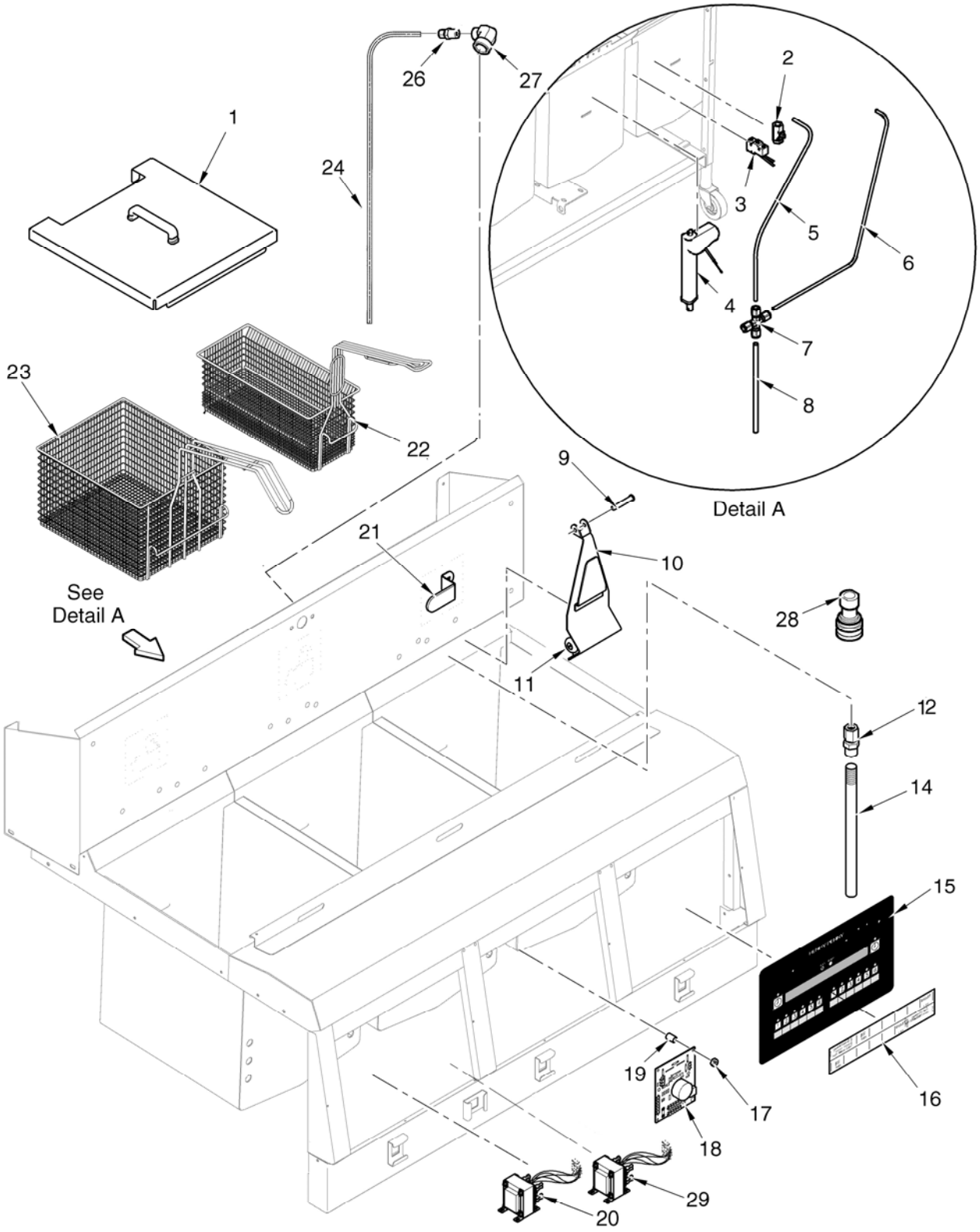

Figure 3-9. Autolift Feature

FIGURE & ITEM NO.	PART NO.	DESCRIPTION	QTY. PER UNIT 321	322
3-12		AUTOLIFT FEATURE		
1	50814	FRYPOT COVER, AUTOLIFT	1	2
2	50750	FILTER VALVE, OIL RETURN	1	1
√ 3	50764	MICROSWITCH, RIGID LEVER	1	2
√ 4	50716	ACTUATOR, AUTOLIFT, 24V MOTOR (SN: EN040JB) & BELOW)	2	4
√ 4	63602	ACTUATOR, AUTOLIFT, 24V MOTOR (SN: EN041JB UP TO BP0812001)	2	4
√ 4	80091	ACTUATOR, AUTOLIFT, 24V MOTOR (SN: BP0812001 & ABOVE)	2	4
5	50780	TUBE, UNION TO WELL 2, FILTER SYSTEM	-	1
6	50779	TUBE, UNION TO WELL 1, FILTER SYSTEM	-	1
7	FP01-129	UNION, TEE, 3/8 IN. TUBE SS, FILTER SYSTEM	-	1
8	50778	TUBE, PUMP TO UNION, FILTER SYSTEM	-	1
9	50776	PIN, ACTUATOR CLEVIS	2	4
10	50865	BASKET HANGER ASSY.	2	4
11	31421	...BEARING WITH SCREW	4	8
12	FP01-128	CONNECTOR (3/8 IN. TUBE TO 3/8 IN. NPT SS), FILTER SYSTEM	-	1
13*	NS03-023	...NUT, 1/4-20 ACORN CAP	4	8
14	50785	TUBE, OIL RETURN, LONG, FILTER SYSTEM	-	1
14	60611	RETURN FAUCET ASSY. (WITH 17334 DISCONNECT)	1	1
√ 15	60796RB	GM 12 BUTTON CONTROL (321)	1	2
16	61562	MENU CARD, AUTOLIFT	2	4
17	NS02-005	NUT	4	8
√ 18	50290	BASKET LIFT PCB ASSY.	1	2
19	ME50-024	SPACER	4	8
√ 20	30614	TRANSFORMER (208/240V-PRI, 24V-SEC.)	1	2
21	59721	RETURN VALVE HANDLE	-	2
22	50704	1/2 SIZE BASKET	2	4
23	50703	FULL SIZE BASKET	1	2
24	26901	TUBE, OIL RETURN LINE (before 12-1-06)	1	-
24	73957	TUBE, OIL RETURN LINE (after 12-1-06)	1	-
25*	50786	TUBE, 2.00 NIPPLE, FILTER SYSTEM	-	1
26	FP01-082	CONNECTOR (3/8 TUBE TO ½ NPT SS)	1	-
27	FP01-087	ELBOW	1	1
28	17333	DISCONNECT – FEMALE (USED W/60611)	1	1
29	TS22-012	TRANSFORMER – AUTOLIFT	1	2

√ recommended parts
*not shown