SECTION 3. OPERATION

3-1. OPERATING COMPONENTS

Frypot	This reservoir holds the cooking shortening, and is designed to accommodate the heating elements, 6 head of product and an adequate cold zone for collection of cracklings
Carrier	This stainless steel carrier consists of five racks which contain the food product during and after frying
Drain Valve	A two-way ball valve, normally in the closed position; turn the handle to drain the shortening from the frypot into the filter drain pan
Drain Interlock Switch	A microswitch that provides protection for the frypot in the event an operator inadvertently drains the shortening from the frypot while the main switch is in the COOK position; the switch is designed to automatically shut off the heat when the drain valve is opened
Shortening Mixing System	A shortening mixing capability to help ensure shortening is properly mixed to prevent an accumulation of moisture and hence boiling action in the pot; the filter pump is activated by the controls, at preset intervals, to mix the shortening
Lid Latch	A mechanical catch on the front of the lid which engages a bracket on the front of the frypot, when lid is lowered
Air Valve	Pumps air into the shortening, periodically, to keep the shortening at a uniform temperature; this only functions when unit has been sitting idle for a period of time, and when heating up from a cold start

3-1. OPERATING COMPONENTS (Continued)

High Limit

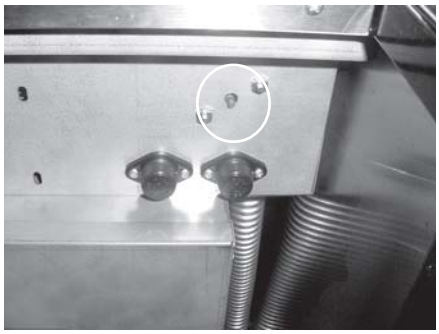

Figure 3-1

This high temperature control senses the temperature of the shortening; if the temperature of the shortening exceeds 450°F (230°C), this control will open and shut off the heat to the frypot; when the temperature of the shortening drops to a safe operation limit, the control must be manually reset by pressing the red reset button, located under the control panel, in the right, front of the fryer

Filter Drain Pan

The removable pan that houses the filter and catches the shortening when it is drained from the frypot; also used to remove and discard old shortening

When hot shortening is in this pan, use extreme care to avoid burns.

Filter Union

Connects the filter to the filter pump, and allows easy removal of the filter and drain pan

Fuses

A protective device which breaks the circuit when the current exceeds the rated value

3-2. LID OPERATION

To close lid:

1. Lower the lid until latch comes into contact with the pot.

To open lid:

1. Unlatch the front lid latch.
2. Lift up on handle to raise lid.

3-3. SWITCHES AND INDICATORS

Refer to image at the end of this section.

Fig. No.	Item No.	Description	Function
3-2	1	HEAT ON	Lights when the control calls for heat; the elements come on and heats the shortening
3-2	2	Digital Display	Shows all the functions of the Cook Cycle, Program Modes, Diagnostic Modes, and alarms
3-2	3	PR PRESSURE ON	Only used on models that create pressure in the frypot; this should not light
3-2	4	WAIT	Flashes when the shortening temperature is not at the proper temperature for cooking product
3-2	5	READY	Lights when the shortening temperature is 5° F below to 15° F above the cooking temperature, signaling the operator that the shortening temperature is at the proper temperature for cooking product
3-2	6	INFO	Press to display the following fryer information and status: a. The temperature of the shortening b. The temperature setpoint c. Filter status d. The number of times filtered today e. The average no. of filters per day f. No. of times Cook Cycle was stopped early today g. No. of times Cook Cycle was stopped early in past week e. Oil Life Display (Only if "Change Oil" feature is enabled) f. Date and time If pressed in the Program [P] PROG de, shows previous settings. Pressing this along with accesses the Information Mode which has historic information on the operator and fryer's performance
3-2	7 & 8	DOWN UP	Used to adjust the value of the currently displayed setting in the Program Modes

3-3. SWITCHES AND INDICATORS (Continued)

Fig. No.	Item No.	Description	Function
3-2	9	P ▷ PROG	Press to access Program Modes; once in the Program Mode, it is used to advance to the next setting; if pressed along with INFO it accesses the Information Mode which has historic information on the operator and fryer's performance
3-2	10		Used to start and stop Cook Cycles, and to stop the timer at the end of a Holding Cycle
3-2	11	Menu Card Window	The name of the food product associated with each product selection button; the menu card strip is located behind the decal
3-2	12	Product Select Buttons	Are used to select the product for cooking; to use them to start Cook Cycles, see section 3, Special Program Mode item SP-10
3-2	13	COOK/PUMP Switch	A 3-way switch with a center OFF position turn the switch to the COOK position to operate the fryer; turn the switch to the PUMP position to operate the filter pump; certain conditions must be met before operating the filter pump; these conditions are covered later in the Filtering Section of this manual
3-2	14	IDLE CLEAN	Used to manually enter an Idle Mode, or Clean-Out Mode

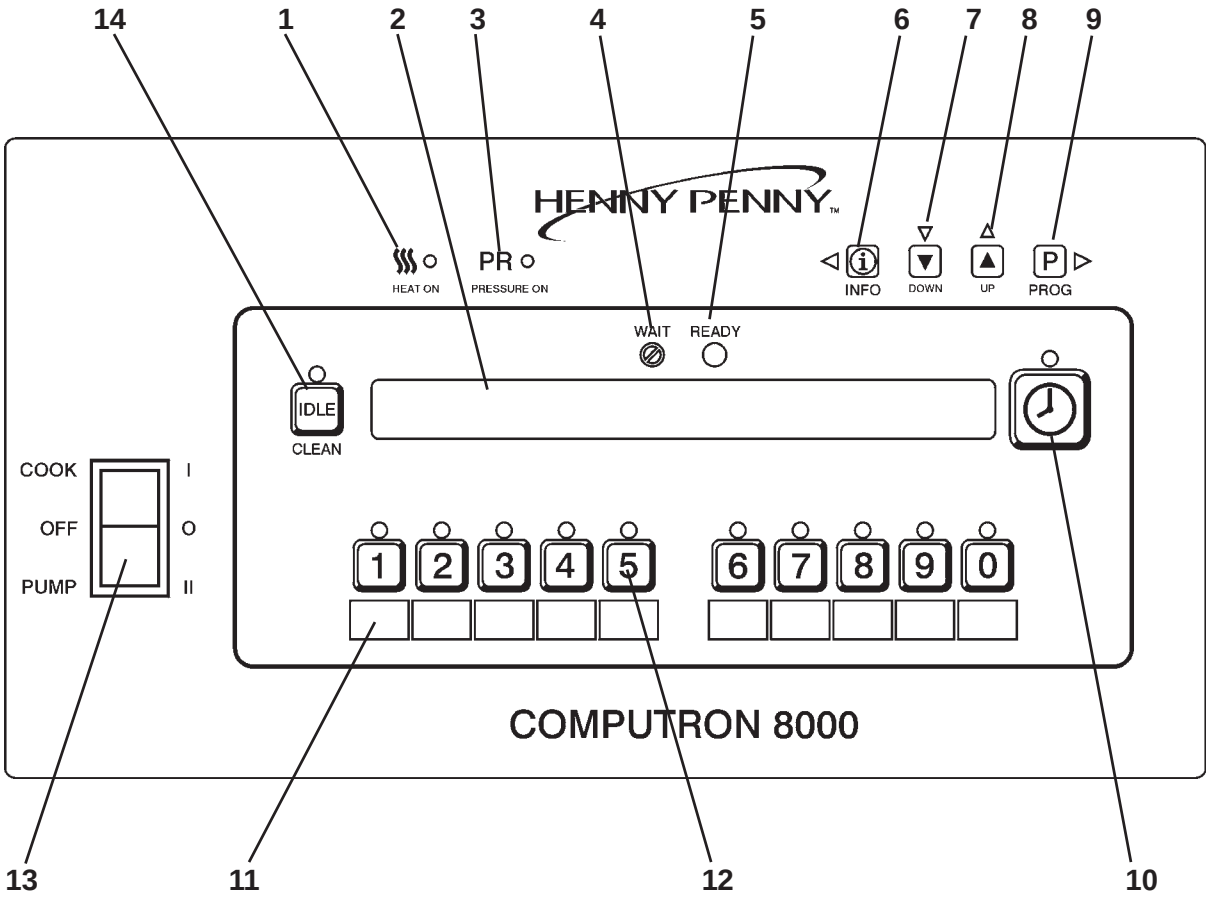
14
1
2
3
4
5
6
7
8
9
HENNY PENNY
HEAT ON
PR
PRESSURE ON
INFO
DOWN
UP
PROG
WAIT
READY
IDLE
CLEAN
COOK
OFF
PUMP
I
O
II
1
2
3
4
5
6
7
8
9
0
COMPUTRON 8000
13
11
12
10

Figure 3-2

3-4. CLOCK SET

NOTICE

Upon initial start-up, or PC board replacement, if "CLOCK SET" automatically appears in the display, start with step 4.

1. Press and hold [P] PROG ▷ for 5 seconds until "LEVEL 2" shows in display.
2. Press [P] PROG ▷ and "CLOCK SET", "ENTER CODE" shows in display.
3. Press [1] [2] [3] .
4. "CS-1, SET, MONTH", and the month flashes in the display.
5. Press the [▽] DOWN [△] UP to change the month.
6. Press [P] PROG ▷ and "CS-2, SET, DATE" shows in the display, with the date flashing.
7. Press [▽] DOWN [△] UP to change the date.
8. Press [P] PROG ▷ and "CS-3, SET, YEAR" shows in the display, along with the year flashing.
9. Press [▽] DOWN [△] UP to change the year.
10. Press [P] PROG ▷ and "CS-4, SET, HOUR" shows in the display, with the hour and "AM" or "PM" flashing.
11. Press [▽] DOWN [△] UP to change the hour and AM/PM setting.
12. Press [P] PROG ▷ and "CS-5, SET, MINUTE" shows in the display, with the minutes flashing.
13. Press [▽] DOWN [△] UP to change the minutes.

3-4. CLOCK SET (Continued)

14. Press [P] PROG ▷ and "CS-6, CLOCK MODE" shows in the display, along with "1.AM/PM".

    "1.AM/PM" is 12 hour time, "2.24-HR" is 24 hour time. Press [▽] DOWN [△] UP to change.

15. Press [P] PROG ▷ and "CS-7, DAYLIGHT SAVINGS ADJ" shows in the display, along with "2.US".

    Press [▽] DOWN [△] UP to change to the following:

    a. "1.OFF" = No automatic adjustments for daylight savings time.

    b. "2.US" = Automatically applies United States daylight savings time adjustment. DST activated on the first Sunday in April. DST de-activated on the last Sunday in October.

    c. "3.EURO" = Automatically applies European (CE) daylight saving time adjustment. DST activated on the last Sunday in March. DST de-activated on the last Sunday in October.

16. Press [P] PROG ▷ and "CS-8, BEGIN NEW DAY" shows in display, along with "3:00AM".

    This setting indicates the time of day that statistics start accumulating for a new day. If set to 3:00AM, for example, then late night cook cycles and filter operations from midnight to 3:00AM Tuesday morning, are accumulated with Monday's statistics.

    The CS-8 value can be set from 12:00AM (midnight) to 8:00AM, in half hour increments (12:00 AM, 12:30 AM, 1:00 AM, 1:30 AM, etc.). The default value for general market software is 3:00 AM.

    Press [▽] DOWN [△] UP to change the time the "new" day starts.

17. Clock Set is now complete. Press and hold [P] PROG ▷ to exit.

3-5. FILLING OR ADDING SHORTENING

CAUTION

The shortening level must always be above the heating elements when the fryer is heating and at the frypot level indicators on the rear of the frypot (Figure 3-3). Failure to follow these instructions could result in a fire and/or damage to the fryer.

When using solid shortening, it is recommended to melt the shortening on an outside heating source before placing it in the frypots. The burner tubes must be completely submerged in shortening. Fire or damage to the frypot could result.

1. It is recommended that a high quality frying shortening be used in the open fryer. Some low grade shortenings have a high moisture content and will cause foaming and boiling over.

WARNING

To avoid severe burns when pouring hot shortening into frypot, wear gloves and take care to avoid splashing.

Figure 3-3

2. The electric model requires 100 lbs. shortening (45 Kg.) The frypot has two level indicator lines inscribed on the rear wall of the frypot which show when the heated shortening is at the proper level.

3. Cold shortening should be filled to lower indicator.

DANGER
OVERFLOW RISK

BE CERTAIN THE SHORTENING IS NEVER ABOVE THE UPPER LEVEL INDICATOR LINE. FAILURE TO FOLLOW THESE INSTRUCTIONS CAN RESULT IN SHORTENING OVERFLOWING THE FRYPOT CAUSING SERIOUS BURNS, PERSONAL INJURY, FIRE AND/OR PROPERTY DAMAGE.

3-6. PRODUCT RACKING RECOMMENDATIONS

The rack positions are referenced starting at the bottom:

4 _____
3 _____
2 _____
1 _____

The bottom position is to be avoided on small loads because it is closer to the cold zone. (The oil is cooler at the bottom of the frypot and hotter at the top.) With bigger loads, however, there is generally enough turbulence in the oil that the bottom rack gets sufficient heat.

The top position is to be avoided on small loads because of insufficient oil coverage. With bigger loads, the top rack has good oil coverage because the volume of product on the lower racks raises the overall oil level.

Cooking ONE rack (2-head load)	Cooking TWO racks (4-head load)
4 _____	4 _____
3 _____	3 OOOOOOOOO
2 OOOOOOOOO	2 OOOOOOOOO
1 _____	1 _____

Cooking THREE racks (6-head load)	Cooking FOUR racks (8-head load)
4 _____	4 OOOOOOOOO
3 OOOOOOOOO	3 OOOOOOOOO
2 OOOOOOOOO	2 OOOOOOOOO
1 OOOOOOOOO	1 OOOOOOOOO

3-7. BASIC OPERATION

Follow the procedures below on the initial start-up of the fryer, and each time the fryer is brought from a cold, or shut down condition, back into operation. These are basic instructions.

1. Fill shortening to the proper level in the frypot; to the lower level indicator

BE CERTAIN THE SHORTENING IS NEVER ABOVE THE UPPER FRYPOT LEVEL INDICATOR LINE. FAILURE TO FOLLOW THESE INSTRUCTIONS CAN RESULT IN SHORTENING OVERFLOWING THE FRYPOT WHICH COULD CAUSE SERIOUS BURNS, PERSONAL INJURY, FIRE AND/OR PROPERTY DAMAGE.

2. Turn the COOK/PUMP switch to the COOK position and press the appropriate product button to select the amount of product to be cooked. Unit automatically goes into the Melt Cycle. When temperature reaches 250° F (121° C) the controls goes into the Heat Cycle, and heats the shortening to the setpoint temperature.

3. Stir the shortening as it's heating up from a "cold" start. Be sure to stir down into the "cold zone".

DO NOT STIR THE SHORTENING AT ANY OTHER TIME EXCEPT AT MORNING START-UP. FAILURE TO FOLLOW THESE INSTRUCTIONS CAN RESULT IN SHORTENING OVERFLOWING THE FRYPOT WHICH COULD CAUSE SERIOUS BURNS, PERSONAL INJURY, FIRE, AND/OR PROPERTY DAMAGE

3-7. BASIC OPERATION (Continued)

4. Allow fryer to heat until READY illuminates.

NOTICE

Bypass the melt cycle, if desired, by pressing a product button and holding it for five seconds. The display shows "EXIT MELT? 1=YES 2=NO". Press 1 to exit melt.

CAUTION

Do not bypass the Melt Cycle unless enough shortening has melted to completely cover all of the heating elemets. If the Melt Cycle is bypassed before all heating elements are covered, excessive smoking of shortening, or a fire could result.

NOTICE

The heat cycles on and off about 10 degrees before the setpoint temperature, to help prevent overshooting the setpoint temperature. (proportional control)

Once out of the Melt Cycle, WAIT flashes until 5° before setpoint temperature is reached. Then READY illuminates and the selected product shows in the display.

5. Slide racks of breaded product into carrier on the lid, starting with the bottom rack, to prevent damaged product.

NOTICE

Before loading product onto the racks, lower the racks into the hot shortening to prevent the product sticking to the racks.

6. Lower and latch the lid, and press .

NOTICE

A different product can be selected during the first minute of cooking, in case the wrong product button was pressed. To check the shortening temperature press INFO or to stop a Cook Cycle, press .

7. At the end of the cycle, an alarm sounds, while the display shows "DONE". Then press .

3-7. BASIC OPERATION (Continued)

8. Unlatch and raise the lid cautiously.

9. Using the rack handles, remove the racks of product from the carrier, starting with the top rack, to prevent damaged product.

10. If a Quality time (hold time) was programmed, the controller automatically starts the hold timer. The display alternately shows the product selected and the quality time remaining in minutes. If a different product is selected during the Hold Cycle, the display only shows the product selected.

11. At the end of the Hold Mode, a tone sounds, the display flashes "QUALITY", and the product it was timing. Press and release .

NOTICE

In the Cook Mode, when "FILTER SUGGESTED", shows in the display, the operator has the option to filter at this time, or to continue cooking. But, if the operator continues cooking, a Filter Lockout occurs within the next Cook Cycle, or two.

When "FILTER LOCKOUT" , then "YOU *MUST* FILTER NOW....." shows in the display, P ▷ PROG is the only button that functions, until the unit is filtered. Follow the filtering instructions in this manual.

Once filtering is complete and the COOK/PUMP switch is turned back on, "IS POT FILLED" shows in the display, followed by "1=YES 2=NO".

If shortening is at the proper level in the frypot, press 1 and the controls start a normal heating process.

If shortening is NOT at the proper level, press 2 and "TURN OFF UNTIL FILLED…" scrolls through the display. Turn the COOK/PUMP switch to the OFF position, fill frypot to the proper level, then turn the COOK/PUMP switch back to the COOK position.

Again, "IS POT FILLED" shows in the display, followed by "1=YES 2=NO". This time press 1 and unit resumes normal heating process.

CAUTION

When the fryer is heating, the shortening level must always be above the heating elements. Failure to follow these instructions could result in a fire and/or damage to the fryer.

3-8. CARE OF THE SHORTENING

DANGER
OVERFLOW RISK

FOLLOW THE INSTRUCTIONS BELOW TO AVOID SHORTENING OVERFLOWING THE FRYPOT, WHICH COULD RESULT IN SERIOUS BURNS, PERSONAL INJURY, FIRE, AND/OR PROPERTY DAMAGE.

1. To protect the shortening when the fryer is not in immediate use, the fryer should be put into the Idle Mode.

2. Frying breaded products requires filtering to keep the shortening clean. The shortening should be filtered at least twice a day; after lunch rush and at the end of the day.

3. Maintain the shortening at the proper cooking level. Add fresh shortening as needed.

4. Do not overload the baskets with product, or place product with extreme moisture content into baskets.

DANGER
FIRE HAZARD

WITH PROLONGED USE, THE FLASHPOINT OF SHORTENING IS REDUCED. DISCARD SHORTENING IF IT SHOWS SIGNS OF EXCESSIVE SMOKING OR FOAMING. SERIOUS BURNS, PERSONAL INJURY, FIRE, AND/OR PROPERTY DAMAGE COULD RESULT.

3-9. FILTERING INSTRUCTIONS

The Henny Penny electric 8 head fryer, Model 291, must be cleaned and the shortening filtered at least twice daily; after lunch rush and at the end of the day.

CAUTION

Drain the shortening at 275° F (135° C) or less. The higher temperatures cause cracklings to burn on the steel frypot surfaces after the shortening has drained.

3-9. FILTERING INSTRUCTIONS (continued)

DANGER
OVERFLOW RISK

FILTER ONLY WHEN THE SHORTENING TEMPERATURE IS LESS THAN 275° F (135° C). FAILURE TO DO SO CAN RESULT IN SHORTENING OVERFLOWING THE FRYPOT, CAUSING SERIOUS BURNS, PERSONAL INJURY, AND/OR PROPERTY DAMAGE.

High volume cooking could cause the cold zone to fill quicker with cracklings and cleaning may be required more often. Part of the process involves removing cracklings from the cold zone of the frypot.

1. Turn COOK/PUMP switch to OFF position.

2. Make sure drain pan is under fryer and the filter union is tightened to the standpipe, coming out of the pan.

WARNING

The filter pan must be as far back under fryer as it will go, and the cover in place. Be sure the hole in the cover lines up with the drain before opening the drain. Failure to follow these instructions causes splashing of shortening and could result in personal injury.

Surfaces of fryer and racks will be hot. Use care when filtering to avoid getting burned.

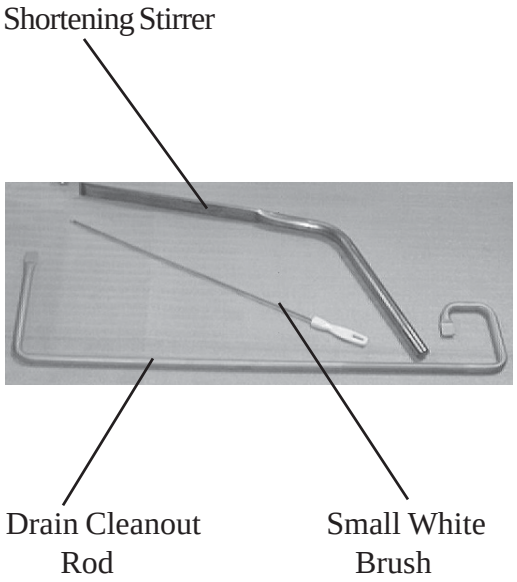

3. Remove cooking racks and carrier, and wipe bottom of lid. Tilt lid out of the way to clean frypot.

4. Pull drain handle towards you to open drain valve. The handle should point straight out to the front of the fryer. Use L-shaped brush to clean cracklings from the heating elements and from sides and bottom of frypot as shortening drains. Use straight brush to push cracklings through drain opening in bottom of frypot if necessary, and to clean between the heating elements and the frypot wall.

3-9. FILTERING INSTRUCTIONS (Continued)

DANGER
OVERFLOW RISK

BRUSH ALL CRACKLINGS FROM FRYPOT SURFACES AND THE COLD ZONE DURING THE FILTERING PROCESS. FAILURE TO DO SO CAN RESULT IN SHORTENING OVERFLOWING THE FRYPOT, WHICH COULD CAUSE SERIOUS BURNS, PERSONAL INJURY, FIRE AND/OR PROPERTY DAMAGE.

5. When all of the shortening has drained, scrape or brush the sides and bottom of the frypot, and swing drain valve handle to the closed position.

6. If an optional filter rinse hose is available on your fryer, the following cleaning procedure may be used, otherwise continue onto step 7.

   a. Attach the filter rinse hose with its quick disconnect fitting to the male fitting, located next to the filter valve handle. Slide back the spring ring on the female side of the quick disconnect fitting and let it snap into place over the male half of the fitting.

   b. Make sure the hose nozzle is pointed down into the bottom of the frypot and filter valve is in closed position. Move the COOK/PUMP switch to the PUMP position. Hold nozzle carefully to avoid excessive splashing.

WARNING
BURN RISK

Use care to prevent burns caused by splashing of hot shortening.

3-9. FILTERING INSTRUCTIONS (Continued)

c. Rinse the frypot interior. Especially work on hard to clean areas, like the frypot bottom and burner tubes.

d. After thorough rinsing with shortening, close the drain valve.

e. Turn the COOK/PUMP switch to the OFF position.

ONLY CONNECT AND DISCONNECT THE FILTER RINSE HOSE WHEN THE MAIN POWER SWITCH IS IN THE OFF POSITION. ALSO, USE A DRY CLOTH OR GLOVE TO AVOID BURNS. FAILURE TO DO THIS COULD RESULT IN SEVERE BURNS FROM HOT SHORTENING SPRAYING FROM THE MALE FITTING.

f. Detach the hose and raise, the fitting end of hose, high for a minute to allow the remaining shortening in the hose to drain into the frypot.

7. Turn COOK/PUMP switch to PUMP.

8. When all shortening has been pumped into frypot turn COOK/PUMP switch off.

3-10. CHANGING THE FILTER ENVELOPE

The filter envelope should be changed after 10-12 filterings, or whenever it becomes clogged with crumbs. Proceed as follows:

1. Move the COOK/PUMP switch to the OFF position.

2. Remove and empty the condensation drain pan.

3. Disconnect the filter union and remove the filter drain pan from beneath the frypot.

Use protective cloth or glove when disconnecting the filter union or severe burns could result.

If the filter pan is moved while full of shortening, use care to prevent splashing, or severe burns could result.

3-10. CHANGING THE FILTER ENVELOPE (Continued)

4. Lift the filter screen assembly from the drain pan.

5. Wipe the shortening and crumbs from the filter drain pan. Clean the filter drain pan with soap and water. Thoroughly rinse with hot water.

6. Unthread the standpipe from the filter screen assembly.

7. Remove the crumb catcher and clean thoroughly with hot water.

8. Remove the filter clips and discard the filter envelope.

9. Clean the top and bottom filter screen with soap and water. Rinse thoroughly with hot water.

   NOTICE

   Be sure that the filter screens, crumb catcher, filter clips, and the standpipe are thoroughly dry before assembly of filter envelope as water will dissolve the filter paper.

10. Assemble the top filter screen to the bottom filter screen.

11. Slide the screens into a clean filter envelope.

12. Fold the corners in and then double fold the open end.

13. Clamp the envelope in place with the two filter retaining clips.

14. Replace the crumb catcher screen on top of the filter paper. Screw on the standpipe assembly.

15. Place complete filter screen assembly back into filter drain pan and slide pan back into place beneath the fryer.

16. Connect the filter union by hand. Do not use a wrench to tighten.

17. Slide the condensation drain pan back into place. The fryer is now ready to operate.

3-11. FILTER PUMP MOTOR PROTECTOR-MANUAL RESET

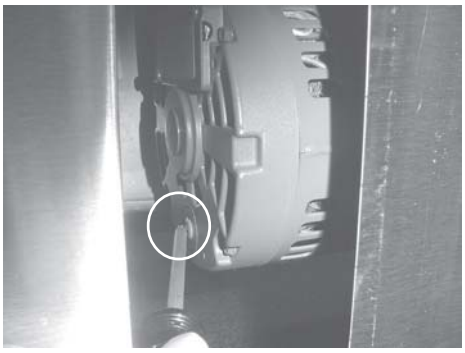

The filter pump motor is equipped with a manual reset button, located on the rear of the motor, in case the motor overheats. If motor won't run, wait about 5 minutes before attempting to reset this protective device to allow motor to cool. Remove the access panel on the left side panel of the unit to reset the button. It takes some effort to push the reset, and a screwdriver can be used to help reset the button.

To prevent burns caused by splashing shortening, turn the unit's main power switch to the OFF position before resetting the filter pump motor's manual reset protection device.

3-12. CLEANING THE FRYPOT

After the initial installation of the fryer, as well as before every change of shortening, the frypot should be thoroughly cleaned as follows:

1. Turn the COOK/PUMP switch to OFF, and unplug unit from wall receptacle.

Moving the fryer or filter drain pan while containing hot shortening is not recommended. Hot shortening can splash out and severe burns could result.

The filter drain pan must be as far back under fryer as it will go, and the cover in place. Be sure the hole in the cover lines up with the drain before opening the drain. Failure to follow these instructions causes splashing of shortening and could result in personal injury.

3-12. CLEANING THE FRYPOT (Continued)

2. If hot shortening is present in the frypot, it must be drained by slowly pulling the drain handle out towards you.

3. Close the drain valve and discard the shortening.

4. Raise lid, remove the racks and carrier from lid, and tilt lid back, so that the lid won't interfere with cleaning.

5. Fill the frypot to the level indicators with hot water. Add 8 to 10 ounces of fryer cleaner (Henny Penny part number 12101) to the water and mix thoroughly.

WARNING


CHEMICAL SPLASH GOGGLES


CHEMICAL RESISTANT GLOVES

Always wear chemical splash goggles or face shield and protective rubber gloves when cleaning the frypot as the cleaning solution is highly alkaline. Avoid splashing or other contact of the solution with your eyes or skin. Severe burns and possible bindness will result. Carefully read the instructions on the cleaner. If solution comes in contact with your eyes, rinse thoroughly with cool water and see a physician immediately.

6. Turn the COOK/PUMP switch to COOK and enter the Clean-Out Mode by pressing and holding IDLE/CLEAN until "CLEAN OUT?", "1=YES 2=NO" shows in display. Press 1 to start Clean-Out Mode. The fryer displays "*CLEAN-OUT MODE*" and heats up to a preprogrammed temperature (195°F (91°C max.) then automatically begins a preset timed countdown. Use ▽ DOWN △ UP, if necessary, to adjust the temperature and to keep cleaning solution from boiling over.

NOTICE

Henny Penny has the following cleaners available:

Foaming Degreaser - Part no. 12226
PHT Liquid Cleaner - Part no. 12135
PHT Dry Powder Cleaner - Part no. 12101

See your local distributor for details.

3-12. CLEANING THE FRYPOT (Continued)

7. Using the fryer brush (Henny Penny part number 12105) scrub the inside of the frypot, the lid, and around the counter-top of the fryer.

CAUTION

Watch the cleaning solution constantly to make sure it does not boil over causing damage to controls.

Do not use steel wool, other abrasive cleaners or cleaners/ sanitizers containing chlorine, bromine, iodine or ammonia chemicals, as these will deteriorate the stainless steel material and shorten the life of the unit.

Do not use a water jet (pressure sprayer) to clean the unit, or component damage could result.

8. After cleaning, turn off the COOK/PUMP switch. Open the drain valve and drain the cleaning solution from the frypot into the filter drain pan and discard.

9. Close the drain valve and refill the frypot with plain hot water to upper level indicator line.

10. Add approximately 16 ounces of distilled vinegar and enter the Clean-Out Mode again (see step 6).

12. Using a clean brush, scrub the interior of the frypot and lid liner. This will neutralize the alkaline left by the cleaning compound.

13. Drain the vinegar rinse water and discard.

14. Rinse down the frypot, using clean hot water.

15. Thoroughly dry the filter drain pan, and the frypot interior.

NOTICE

Make sure the inside of the frypot, the drain valve opening, and all parts that come in contact with the new shortening are as dry as possible.

16. Replace the clean filter screen assembly in the filter drain pan and install under fryer.

17. Refill the fryer with fresh shortening

3-13. REGULAR MAINTENANCE

As in all food service equipment, the Henny Penny open fryer does require care and proper maintenance. The table below provides a summary of scheduled maintenance. The following paragraphs provide step-by-step maintenance procedures to be performed by the operator.

Procedure	Frequency
Filtering of shortening	Daily (at least twice a day)
Changing of shortening	As required
Changing the filter envelope	After 10-12 filterings or when clogged
Cleaning the frypot	Upon initial installation and every change of shortening
Cleaning rthe Nylatrons	Monthly
Lubricate lid rollers	Annually

3-14. PREVENTIVE MAINTENANCE

Cleaning Nylatrons - Monthly

1. Spray Henny Penny biodegradable, food safe, foaming degreaser (part no. 12226) on Nylatrons.
2. Raise lid up and down several times to spread the degreaser.
3. Wipe Nylatrons to remove food soil, grease, and degreaser residue.

Lubricating Lid Rollers

The lid rollers, in the back of the fryer, should be lubricated at least once a year, to allow the lid easy movement.

1. Remove the back shroud of the fryer.
2. Using spindle lube, part number 12124, place a small amount of lube on both top and bottom rollers. Make sure to lube both left and right rollers.

3-15. PROGRAMMING

1. Press and hold P ▷ PROG for one second until “PROG” shows in the display, followed by “ENTER CODE”.
2. Enter code 1, 2, 3. “SELECT PRODUCT…PRESS PROG” scrolls across the display.
3. Press and release the desired product button (1 to 10).

NOTICE

If no buttons are pressed within approximately 2 minutes while in the Program Mode, the controls will revert back to the Cook Mode.

Press ▼ DOWN to copy a product, erase a product, preset a product, erase all products, or preset all products.

4. Press and release P ▷ PROG . The name of that product shows in the display. Ex. “ NAME“FRIES”.

3-15. PROGRAMMING (Continued)

Change Product Names

a. Press and release ▽ DOWN △ UP and the first letter, or digit, starts flashing.

b. Press and release ▽ DOWN △ UP to change the flashing letter.

c. To continue to the next letter, press P ▷ PROG. Then press ▽ DOWN △ UP to change this letter.

d. Repeat step c until up to 7 letters are entered.

e. Press and hold P ▷ PROG to exit Program Mode, or press and release P ▷ PROG until "PRELOAD" shows in display, to continue with Program Mode.

5. The Preload Mode allows the operator to drop large pieces first, with the lid up, before loading the rest of the product. The preload cycle always regulates to the Step 1 cook temperature. Press ▽ DOWN △ UP to set a pre-load time, or press P ▷ PROG if no pre-load is desired

6. Press and release P ▷ PROG and "1. COOK TIME" shows in the display along with the preset time. Press ▽ DOWN △ UP to change the time. The time shows in minutes and seconds. Press and hold the buttons, and the time will jump by 5 second increments to a maximum of 59:59.

7. Press and release P ▷ PROG and "1. TEMP" shows in the display, along with the preset temperature on the right side of the display. Press ▽ DOWN △ UP to change the temperature. Press and hold the buttons and the temperature will jump by 5 degree increments to a max. of 380°F (193ºC), and a min. of 190°F (88ºC).

3-15. PROGRAMMING (Continued)

8. Press and release P ▷ PROG and "2. STEP 2 AT" shows in display, along with a step 2 time. If no step 2 is desired, set time to "0:00" and press P ▷ PROG. If a step 2 is desired, press ▽ DOWN △ UP and set a time. Then press P ▷ PROG to set the temperature.

NOTICE

Up to 10 steps can be programmed for a product, repeating the above step for each cooking step.

9. Press and release P ▷ PROG and "ALARM – 1 AT 0:00" shows in the display. Press and release ▽ DOWN △ UP to set an alarm. Ex: If a Cook Cycle was set at 3 minutes, and an alarm was to go off after 30 seconds into the Cook Cycle, "2:30" would be set in the display at this time. When the timer counts down to 2:30 the alarm sounds.

After the alarm time is set, press P ▷ PROG and "ALARM" and "TYPE" flashes in the display, with the alarm type on the right side of the display. "TIME", "SHAKE", "STIR", "ADD", and "LID" can be set by pressing ▽ DOWN △ UP. An alarm sounds and alarm type flashes, prompting the operator to shake the basket, stir the product, or add product. If "TIME" is selected, the time remaining flashes in the display. If "LID" is selected, "CLOSE LID" flashes in the display. The timer count-down pauses until the lid is closed and is pressed to restart the timer.

NOTICE

Up to 4 alarms can be programmed. After the first one is set, the other alarms can be accessed by pressing P ▷ PROG again.

10. Press and release P ▷ PROG until "QUALITY TMR" shows in the display along with the preset holding time. Press and release ▽ DOWN △ UP to adjust the holding time, up to 59:59.

NOTICE

To exit the Program Mode at any time, press and hold P ▷ PROG for 2 seconds.

3-15. PROGRAMMING (Continued)

11. Press and release P ▷ (PROG) and "LOAD COMP" shows in the display along with the load compensation value. This automatically adjusts the time to account for the size and temperature of the cooking load. Press and release ▽ (DOWN) △ (UP) to change this value to a max. of 20 and a min. of 0, or "OFF". Preset at factory at 5.

12. Press and release P ▷ (PROG) and "LCOMP REF" shows in the display (if load compensation is set to "OFF", then "___" shows in display) along with the load compensation average temperature. This is your average cooking temperature for the products you cook. The timer speeds up at temperature above this setting and slows down at temperatures below this setting. Press and release ▽ (DOWN) △ (UP) to change this value.

    Or, to use the cooking setpoint temperature as the load compensation reference point, press △ ▲ (UP) until "STEP-X" and "TEMP" flashes in the display. Now for example, if the cooking temperature is 350°, the timer speeds up when the shortening temperature is above 350, and slows down when the temperature is below 350.

13. **Go to Idle after Done?**
    Press and release P ▷ (PROG) and "GO TO IDLE, AFTER DONE" shows in the display, along with "YES" or "NO". Press ▽ (DOWN) △ (UP) to toggle between YES and NO.

14. **Filter Cycle Mode (Optional)**
    For "FILTER AFTER" to appear in the Product Program Mode, the Filter Tracking must be enabled in the Special Program Mode. You have the option to program **"mixed"** (each product has its own filter count) or **"global"** (all products have the same count).

    Press P ▷ (PROG).

3-15. PROGRAMMING (Continued)

"2,Mixed"

a. "FILTER AFTER" shows in the display, along with the preset number of Cook Cycles.

b. Press and release DOWN UP until the desired number of Cook Cycles between filters shows in the display. For example, if 4 is set for a product, each time that product is selected, it counts 1/4, or 25%. Then each time a product is cooked, the percentages add up until 100%, or more is reached. Then display shows "FILTER SUGGESTED".

"3,GLOBAL"

a. "FILTER INCL" shows in the display, along with "NO" or "YES"

b. Press and release DOWN UP to "YES" if that product is to be included in the filter count, or "NO" if it is not.

Copy/Erase Pre-set Products

Products and their setpoints can be copied from one menu location on the controller to another location, preset the controls to factory settings, or erase products and all their values.

1. Press and hold PROG for one second until "PROG" shows in the display, followed by "ENTER CODE".

2. Enter code 1, 2, 3. "SELECT PRODUCT…PRESS PROG" scrolls across the display, followed by "DOWN" FOR OPTIONS"

3. Press DOWN and "**OPTION**", followed by "*1. COPY A PROD" shows in display. Press DOWN again, each time, to view the following options:
   *1. COPY A PROD
   *2. ERASE A PROD
   *3. PRESET A PROD
   *4. ERASE ALL
   *5. PRESET ALL

4. To select one of the above options, press PROG while the desired option shows in display. Selecting PRESET A PROD, or PRESET ALL PROD sets factory setpoints in those menu items.

   Selecting PRESET A PROD, or PRESET ALL PROD sets factory setpoints in those menu items.

   NOTICE

   Press INFO at any time to exit the options menu, or wait 30 seconds and controller automatically exits.

3-15. PROGRAMMING (Continued)

The following are examples of copying and erasing products:

Copying

Press P PROG ▷ to select the presently displayed "COPY A PROD" option. "COPY __ TO __" shows in display. The first set of "_" is blinking. Select the product you wish to copy from, for example, by pressing the 2 button:

"COPY 2 TO __" shows in display.

Next, press product you want to copy *to*, for example, by pressing 0. The controller responds with a confirmation message:

"COPY 2 TO 0?"
"1=YES 2=NO"

Press 1 (YES) and the controller copies product #2 to the product #0 position (the #2 product is left intact) and the display shows "* COPIED *", then returns to the "Select Prog Product" step with the #0 product already selected.

Press 2 (NO), or don't press any button for 20 seconds, the controller displays "X CANCELED X" and abandons the copy process. In this case no changes are made.

Erasing

On the "Select Prog Product" step, press ▼ DOWN. "** OPTIONS **" followed by "*1. COPY A PROD" shows in display.

Press ▼ DOWN three more times to reach the "Erase All" option:
"*2. ERASE A PROD"
"*3. PRESET A PROD"
"*4. ERASE ALL"

Press P PROG ▷ to select the presently displayed "ERASE ALL" option. The controller responds with a confirmation message:

"ERASE ALL PROD ?"
"1=YES 2=NO"

Press 1 (YES) to confirm that you want to erase all products back to "empty" values. The controller responds by erasing each product individually...
"ERASING 1"
"ERASING 2"
"ERASING 3"
"ERASING 4"
"ERASING 5"

Then briefly displays "* ALL ERASED *" and finally, returns to the "Select Prog Product" display.

3-16. SPECIAL PROGRAM MODE

The Special Program mode is used to set more detailed parameters listed below.

- **SP-1** · Degrees Fahrenheit or Celsius
- **SP-2** · Language: English, French, German, Spanish, and Portuguese
- **SP-3** · System initialization
- **SP-4** · Audio volume
- **SP-5** · Audio tone
- **SP-6** · Type of shortening to be melted - liquid, solid
- **SP-7** · Idle Mode
- **SP-8** · Filter Tracking
- **SP-9** · Product buttons
- **SP-10** · Clean-out minutes
- **SP-11** · Clean-out temperature
- **SP-12** · Nominal amps reading
- **SP-13** · Amps reading low limit (percentage)
- **SP-14** · Amps reading high limit (percentage)
- **SP-15** · Program code change
- **SP-16** · Usage code change
- **SP-17** · Change shortening - A-Cook Cycles
- **SP-18** · Change shortening - B-Hours

1. Press and hold P ▷ PROG for 5 seconds until "L-2" and "LEVEL 2", followed by, "SP PROG" and "ENTER CODE shows in the display.

2. Enter code 1, 2, 3, and "SP- 1 ", "TEMP, UNITS" shows in the display.

NOTICE

If a bad code is entered, an alarm sounds and "BAD CODE" shows on the display. Wait a few seconds, the control reverts back to the Cook Cycle, and repeat the above steps.

To exit from the Special Program Mode at any time, press and hold P ▷ PROG button for 2 seconds, or to roll back to previous setting, press INFO .

Degrees Fahrenheit or Celsius (SP-1)

a. Follow steps 1 and 2 above.

b. The display flashes "SP- 1" and "TEMP, UNITS", along with "ºF" or "ºC". Press ▽ DOWN △ UP to toggle from "ºF" to "ºC", or vice versa.

3-16. SPECIAL PROGRAM MODE (Continued)

Language (SP-2)

a. Follow steps 1 and 2 above.

b. Press and release P PROG button. "SP-2" and "LANGUAGE" flashes on the display, along with the language (Ex:" 1.ENGL")

c. To toggle to the desired language, press and release .

System Initialization (SP-3)

This step resets the controls, but doesn't erase product settings.

a. Follow steps 1and 2 above.

b. Press and release P PROG twice. "SP-3" and "DO SYSTEM INIT" flashes on the display, along with "INIT'.

c. Press and hold DOWN. "INIT" shows on the display, a tone sounds, and "IN 3", "IN 2", " IN 1" flashes on the right side of the display. When "INIT" starts flashing on the left side of the display, release DOWN. When " DONE" shows on the display, the initialization is complete, and the controls now have factory preset parameters.

Audio Volume (SP-4)

The volume of the speaker can be adjusted.

a. Follow steps 1 and 2 above.

b. Press P PROG 3 times. "SP-4" and "AUDIO VOLUME" flashes on the display, along with the volume value.

c. Press DOWN UP to adjust the speaker volume; 10 the maximum value and 1 the minimum.

Audio Tone (SP-5)

The tone of the speaker can be adjusted.

a. Follow steps 1 and 2 above.

b. Press P PROG 4 times. "SP-5" and "AUDIO TONE (HZ)" flashes on the display, along with the tone value.

c. Press DOWN UP .o adjust the tone of the speaker; 2000 the maximum, 50 the minimum.

3-16. SPECIAL PROGRAM MODE (Continued)

Type of shortening to be melted - Liquid or Solid (SP-6)

The Melt Cycle can be set to the type of shortening being used.

a. Follow steps 1 and 2 above.

b. Press and release P PROG ▷ 5 times. "SP-6"

and "MELT CYCLE SELECT" flashes on the display, along with "l=LIQ" or "2=SOLID".

c. Press ▽ DOWN △ UP to toggle from one type to another.

CAUTION

The type of shortening being used in the fryer determines the amount of heat applied during the Melt Cycle. If the controls are set to the solid setting, less heat is applied to the shortening, than if the controls were set to liquid. Too much heat applied to solid shortening causes much smoking, and could cause a fire. Match this setting to the type of shortening being used at the time.

When using new shortening, it is recommended to melt the shortening on an outside source before placing shortening in the frypot. Unless elements are completely covered in shortening, fire or damage to the frypot could result.

Idle Mode (SP-7)

A programmed Idle Mode allows the shortening temperature to drop to a lower temperature when not in use. This saves on the shortening and utilities.

a. Follow steps 1and 2 above.

b. Press and release P PROG ▷ 6 times. "SP-7" and "IDLE

MODE ENABLED?" flashes in the display, along with "NO" or "YES".

c. Press and release ▽ DOWN △ UP to toggle from NO to YES, or vice versa.

d. With "YES" in the display, the Idle Mode is enabled.

Press and release P PROG ▷. "SP-7A" and "IDLE SETPT TEMP" shows in the display, along with the preset temperature.

3-16. SPECIAL PROGRAM MODE (Continued)

e. Change the idle setpoint temperature, by pressing DOWN UP

f. Press and release PROG. "SP-7B" and "AUTO-IDLE MINUTES" shows in the display, along with the preset time.

g. Press DOWN UP to set the minutes the cooker stays idle before the Auto-idle is enabled; 60 the maximum, OFF the minimum. Ex: "30" in the display means, if product is not cooked in that frypot for 30 minutes, the control automatically activates the idle setpoint temperature, programmed above.

h. Press and release PROG. "SP-7C" and "GO IDLE AT MELT ?" shows in display.

i. Press DOWN UP to toggle from NO to YES, or vice versa. With "YES" in the display, the fryer automatically enters the Idle Mode once the Melt Mode is exited.

Filter Tracking Enabled (Sp-8)

The controls can be set to signal the operator when the shortening needs filtering. The Filter Tracking must be enabled to program the number of cook cycles between filtering procedures. (See Filter Cycles section 2-2.)

a. Follow steps 1 and 2 above.

b. Press and release PROG until "SP-8" and "FILTER TRACKING ENABLED" flashes on the display, along with "1,OFF".

c. To enable the filter tracking, press DOWN UP to toggle the display from "1,OFF", to "2,MIXED", to, "3,GLOBAL", or "4SCHED".

NOTICE

The Mixed setting allows the operator to set different amounts of Cook Cycles between filters, for each product. If the operator wants to have one setting for all products go to step h.

MIXED

d. If "2,MIXED" is selected, press PROG and "SP-8A" shows in the display followed by "SUGGEST FILTER AT …" and a value between 75% and 100%. Press and release DOWN UP the to change this value.

e. Press PROG and "SP-8B" shows in the display followed by "LOCKOUT ENABLED?" and "YES" or "NO".

Press and release DOWN UP to choose yes or no.

3-16. SPECIAL PROGRAM MODE (Continued)

f. Press P ▷ PROG and "SP-8C" shows in the display, if YES was chosen in step e. "FILTER LOCKOUT AT…" and a value between 100% and 200% shows in display. Press ▽ DOWN △ UP to change this value.

g. Press P ▷ PROG and "SP-8D" shows in the display, followed by "LOCKOUT-HEAT OIL... and a temperature (preset at 300ºF (149ºC). When a filter lockout occurs, the fryer heats up to this set temperature, and the display shows "FILTER LOCKOUT/WAIT". Then once the set temperature is reached, "FILTER LOCKOUT'/ "YOU *MUST* FILTER NOW" shows in display. Use to change this temperature setting.

h. Now, go back to the Filter Cycle Mode step of the Programming Section, and program in the number of Cook Cycles between filtering.

GLOBAL

i. If "3,GLOBAL" is selected, "SP-8A" shows in the display, and followed by "GLOBAL FILTER CYCLES". The right side of the display shows a digit, 1 to 99. Press ▽ DOWN △ UP to set the desired amount of Cook Cycles between filters.

NOTICE

In Cook Mode, the number of global Cook Cycles remaining shows in the center of the display.
Ex: "--------- 5x ----------".

j. Press P ▷ PROG and "SP-8B" shows in the display followed by "LOCKOUT ENABLED?" and "YES" or "NO".

Press and release ▽ DOWN △ UP to choose yes or no

k. Press P ▷ PROG and "SP-8D" shows in the display, followed by "LOCKOUT-HEAT OIL... and a temperature (preset at 300ºF (149ºC). When a filter lockout occurs, the fryer heats up to this set temperature, and the display shows "FILTER LOCKOUT/WAIT". Then once the set temperature is reached, "FILTER LOCKOUT'/ "YOU *MUST* FILTER NOW" shows in display. Use to change this temperature setting.

l. Now, go back to the Filter Cycle Mode step of the Programming Section. Press P ▷ PROG until "FILTER INCL" shows in the display. Each product must be set to "YES" to be included in the filter tracking.

3-16. SPECIAL PROGRAM MODE (Continued)

SCHEDULE

m. If "4,SCHED" is selected, "SP-8A" shows in the display, and followed by "SCHEDULE". Press the P ▷ (PROG) and up to 4 different times of day can be programmed, by pressing ▽ (DOWN) △ (UP).

EX:

SP-8A	"SCHEDULE"	F1:	10.00A
SP-8B	"SCHEDULE"	F2:	2.00P
SP-8C	"SCHEDULE"	F3:	8.00P
SP-8D	"SCHEDULE"	F4:	- - - -

Unneeded times should be left at "- - - -", otherwise, "Filter Suggested" shows in the display, prompting the operator to start filtering.

NOTICE

Cooking is still permitted during the "suggested" phase. However, if lockout is enabled, and the fryer still has not been filtered after one hour, then the controller activates lockout mode and prompts "FILTER LOCKOUT – YOU *MUST* FILTER NOW".

n. Press P ▷ (PROG) and "SP-8E" "SKIP IF LESS THAN..." shows in the display, followed by the number of loads between filters, ex: "LOAD 4". In this example, if the suggested filter time occurs, before 4 loads have been cooked, then the filter operation is skipped. If more than 4 loads have been cooked, then "Filter Suggested" shows in the display. The numbers of loads can be set by pressing .

o. Press P ▷ (PROG) and "SP-8F" shows in the display, followed by "LOCKOUT ENABLED?" Press ▽ (DOWN) △ (UP) to choose "YES" or "NO".

p. Press P ▷ (PROG) and "SP-8G" shows in the display followed by SP-8G "LOCKOUT - HEAT OIL..." and a shortening temperature, when reached, allows the operator to filter. Example, "LOCKOUT - HEAT OIL... 300F" means the display shows "FILTER LOCKOUT" "WAIT", until 300F is reached, then display shows "FILTER LOCKOUT"/"YOU *MUST* FILTER NOW", and repeated high-low tones are activated. This prompts the user that it is now time to filter the shortening. Press ▽ (DOWN) △ (UP) to change.

3-16. SPECIAL PROGRAM MODE (Continued)

Product Buttons (Sp-9)

This mode allows you set up the way products are selected, and Cook Cycles started, in the cook mode.

a. Follow steps 1 and 2 above.

b. Press and release P PROG ▷ until "SP-9" and "PRODUCT BUTTONS" flashes in the display.

c. When using the first option, "1,COOK", pressing a product button displays that product and starts the Cook Cycle. When nothing is cooking, no product displays.

d. Press ▽ DOWN △ UP. to show the second option. If using "2,SELECT", pressing a product button displays the product only. Press ⏲ to start the Cook Cycle.

Clean-Out Temperature (Sp-10)

This allows you to set the number of minutes of the Clean-Out Mode.

a. Follow steps 1 and 2 above.

b. Press P PROG ▷ until "SP-10" and "CLEAN-OUT MINUTES" shows in display, along with the preset minutes.

c. Press ▽ DOWN △ UP to change the number of minutes, up to 99.

Clean-Out Temperature (Sp-11)

This allows you to set the temperature of the Clean-Out Mode.

a. Follow steps 1 and 2 above.

b. Press P PROG ▷ until "SP-11" and "CLEAN-OUT TNP" shows in display, along with the set temperature.

c. Press ▽ DOWN △ UP to change the temperature, up to 212ºF (100ºC).

Nominal Amps Reading (SP-12)-not used on model 291

"SP-12", "AMPS RDG, NOMINAL" should show on the left side of display, and "OFF" on the right side.

Amps Reading Low Limit (SP-13)-not used on model 291

"SP-13" and "AMPS RDG, LOW LIMIT" should show on the left side of display, and "OFF" on the right side.

Amps Reading High Limit (SP-14)-not used on model 291

"SP-14" and "AMPS RDG, HIGH LIMIT" should show on the left side of display, and "OFF" on the right side.

3-16. SPECIAL PROGRAM MODE (Continued)

Program Code Change (SP-15)

This allows the operator to change the program code (factory set at 1, 2, 3) used to access Product Programming, Special Programming, Clock Set, Data Comm, and Heat Control Modes.

a. Follows steps 1 and 2 above.

b. Press P PROG until "SP-15" and "CHANGE, MGR CODE, 1=YES" shows in display, along with "CODE".

c. Press 1. "ENTER NEW CODE, P=DONE, I=QUIT" shows in display. Press product buttons with new code.

d. If satisfied with code, press P PROG. "REPEAT NEW CODE, P=DONE, I=QUIT, shows in display. Press same code buttons in step c.

e. If satisfied with code, press P PROG. *CODE CHANGE* shows in display.

f. If not satisfied with code, press INFO and *CANCELLED* shows in display, then reverts back to "SP-15" and CHANGE, MGR CODE, 1=YES". Then the above steps can be repeated.

NOTICE

Press and hold P PROG at any time to exit Special Program Mode.

Usage Code Change (SP-16)

This allows the operator to change the reset usage code (factory set at 1, 2, 3) to reset the usage amounts of each product. See Review Usage step in Information Mode.

a. Follow steps 1 and 2 above.

b. Press P PROG until "SP-16" and "CHANGE, USG CODE ? 1=YES" shows in display, along with "USAGE".

c. Press 1, "ENTER NEW CODE, P=DONE, I=QUIT" shows in display. Press product buttons with new code.

d. If satisfied with code, press P PROG "REPEAT NEW CODE, P=DONE, I=QUIT" shows in display. Press same code buttons in step c.

3-16. SPECIAL PROGRAM MODE (Continued)

e. If satisfied with code, press P ▷ (PROG). "*CODE CHANGE*" shows in display.

f. If not satisfied with code, press ◁ (INFO) and *CANCELLED* shows in display, then reverts back to "SP-16" and "CHANGE USG CODE ? 1=YES". Then the above steps can be repeated.

Change Shortening-A-Cook Cycles (SP-17)

The operator can set a reminder to filter the shortening, based on the number of Cook Cycles accumulated. The display shows "CHANGE OIL SOON" when the preset number of Cook Cycles has been met, "OFF" to 5000, increments of 10.

a. Follow steps 1 and 2 above.

b. Press P ▷ (PROG) until "SP-17" and "CHANGE OIL' A – COOK CYCLES" shows in display, along with a number of Cook Cycles.

c. Press and release ▽ (DOWN) △ (UP) to change the number of Cook Cycles.

Change Shortening-A-Cook Cycles (SP-18)

The operator can set a reminder to filter the shortening, based on the number of power-on hours accumulated. The display shows "CHANGE OIL SOON" when the preset number of hours has been met, "OFF" to 999 hours.

a. Follow steps 1 and 2 above.

b. Press P ▷ (PROG) until "SP-18" and "CHANGE OIL' B – HOURS" shows in display, along with a number of hours.

c. Press and release ▽ (DOWN) △ (UP) to change the number of power-on hours.

NOTICE

Once the shortening is filtered, to clear the display of "CHANGE OIL SOON" (SP-17 & SP-18), reset the review usage data in the Information Mode. See Information Mode section of this manual.

Press and hold P ▷ (PROG) at any time to exit Special Program Mode.

3-17. DATA LOGGING, HEAT CONTROL, TECH MODE, AND STAT MODE

The Data Logging, Heat Control, Tech and Stat Modes are advanced diagnostic and program modes, mainly for Henny Penny use only. For more information on these modes, contact the Service Department at 1-800-417- 8405, or 1-937-456-8405.

3-18. INFORMATION MODE

This mode gathers and stores historic information on the fryer and operator's performance. Press P ▷ (PROG) and (INFO) at the same time and "*INFO MODE*" shows on display. Press P ▷ (PROG) or (INFO) to access the steps and press ▼ (DOWN) to view the statistics within each step. Information Mode is intended for technical use, but the operator can view the following information:

1. **E-LOG** - last 10 errors and time they occurred
2. **LAST LOAD** - information about the most recent Cook Cycle, or the cycle presently in progress
3. **DAILY STATS** - information for the last 7 days.
4. **REVIEW USAGE**- information accumulated since the last time this data was manually reset
5. **INP A VHDSF M** - provides test of fryer inputs
6. **OUTP** - shows the state of heater and pressure
7. **OIL TMP** - temperature of shortening
8. **CPU TMP** - temperature of PC board
9. **ANALOG** - status of controller's a-to-d converter

NOTICE

Press and hold P ▷ (PROG) to exit Information Mode at any time, or after 2 minutes, controls automatically exit back to normal operation.

1. E-LOG (error code log)
Press ▼ (DOWN) and "1A" (date & time) "*NOW*" shows in display. This is the present date and time.

Press ▼ (DOWN) and if a error was recorded, "1B" (date, time, and error code information) shows in display. This is the latest error code that the controls recorded.

Press ▼ (DOWN) and the next latest error code information can be seen. Up to 10 error codes (1B to 1K) can be stored in the E-LOG Section.

Press P ▷ (PROG) to continue to LAST LOAD.

3-17. INFORMATION MODE (Continued)

2. LAST LOAD

Press ▼ DOWN to view the following information from the most recent Cook Cycle.

FUNCTION	DISPLAY EX:
Time of day the last cook cycle was started	STARTED 10.25A
Product (Last product cooked)	PRODUCT -2-
Ready? (Was fryer Ready before start?)	READY? YES
Stopped: Time remaining, or secs past Done	*DONE* + 9 SECS
Actual Elapsed Cook Time (real seconds)	ACTUAL TIME 7:38
Programmed Cook Time	PROG TIME 7:00
Actual Time vs. Prog Time (Percentage)	ACT / PROG 109%
Max Temp during cook cycle	MAX TEMP 327°F
Min Temp during cook cycle	MIN TEMP 313°F
Avg Temp during cook cycle	AVG TEMP 322°F
Heat On (percentage) during cook cycle	HEAT ON 73%

Only if Presently Cooking:

Present cook step, setpoint, and time rem.	STEP 1:325°F 6:47
Actual Oil Temp., Deg below Load Comp Avg, present Stretch Time (real secs/ck sec)	313°F LC-12° 1.06

Press P PROG ▷ to continue to DAILY STATS.

3. DAILY STATS (reset each day)

Press ▼ DOWN to view the following operation information for any of the last 7 days. Press IDLE CLEAN to select which day.

FUNCTION	DISPLAY EX:
Day this data was recorded for	TUE* APR-30
Number of Hours:Minutes the fryer was on	TUE* ON HRS 13:45
Number of times oil was filtered that day	TUE* FILTERED 3
Total number of cook cycles that day	TUE* TOTAL CK 38
Cook Cycles stopped before “DONE” that day	TUE* QUIT COOK 4
Cook Cycles for Product #1	TUE* COOK -1- 17
Cook Cycles for Product #2	TUE* COOK -2- 9
Cook Cycles for Product #3	TUE* COOK -3- 5
Cook Cycles for Product #4	TUE* COOK -4- 0
Cook Cycles for Product #5	TUE* COOK -5- 0
Cook Cycles for Product #6	TUE* COOK -6- 6
Cook Cycles for Product #7	TUE* COOK -7- 0
Cook Cycles for Product #8	TUE* COOK -8- 0
Cook Cycles for Product #9	TUE* COOK -9- 1
Cook Cycles for Product #0	TUE* COOK -0- 0

Press P PROG ▷ to continue to REVIEW USAGE.

3-18. INFORMATION MODE (Continued)

4. REVIEW USAGE

Press ▼ DOWN to view the accumulated information since the data was manually reset:

FUNCTION	DISPLAY EX:
Day the usage data was previously reset	SINCE APR-19
Number of hours the fryer was on	PWR ON HRS 165
Number of times oil was filtered	FILTERED 34
Total number of cook cycles	TOTAL CK 462
Cook Cycles stopped before “DONE”	QUIT COOK 4
Percentage of Cook Cycles before oil change	OIL WEAR -A- 73%
Percentage of hours before oil change	OIL WEAR -B- 47%
Cook Cycles for Product #1	COOKED -1- 193
Cook Cycles for Product #2	COOKED -2- 107
Cook Cycles for Product #3	COOKED -3- 58
Cook Cycles for Product #4	COOKED -4- 0
Cook Cycles for Product #5	COOKED -5- 13
Cook Cycles for Product #6	COOKED -6- 69
Cook Cycles for Product #7	COOKED -7- 0
Cook Cycles for Product #8	COOKED -8- 7
Cook Cycles for Product #9	COOKED -9- 15
Cook Cycles for Product #0	COOKED -0- 0
Reset usage data: Enter the Mgr Code (1, 2, 3 unless changed) on this step to zero out all the usage information.	RESET USG/ ENTER CODE----

Press P PROG ▷ to continue to INP A_CVHDSF_M

5. INP A_CVHDSF_M

Press ▼ DOWN to view the status of components and inputs. If the input signal is detected, an identifying letter is displayed (see below). If the signal is not detected, “_” is displayed.

With the COOK/PUMP switch in the COOK position, and all inputs detected, “H_ P_ A_CVHDSF_M” shows in the display. See below for “definition” of codes.

A = COOK/PUMP in COOK position.
B = COOK/PUMP in PUMP position
C = Solenoind continuity; won’t show on open fryers
V = Volts - 24 VAC detected
H = High Limit - If “H” is present, the high limit is good; if “H” is missing, the high limit is tripped (overheated) or faulty
D = DRAIN SWITCH-If “D” is present, the drain handle is closed; if “D” is missing, the drain is open or faulty
S = COOK/PUMP switch ON interlock circuit: If “S” is present, the COOK/PUMP switch is in the COOK position. If the “S” is missing, the COOK/PUMP is either off, failed, or wired incorrectly
F = FAN
M = MV-Detects 24 V jumper to MV terminal

3-18. INFORMATION MODE (Continued)

Press ▼ DOWN o view the specific status of each input. An underscore ("_") indicates the input is not presently detected. A checkmark ("✓") indicates the signal is detecting a normal input. A blinking ("X") indicates the signal is presently detected, but is detected as a half-wave (partially failed) input.

NOTICE

The V, H, D, S, F, P and M signals below are wired in series. The first signal missing out of this sequence generally causes all signals to the right of it to be missing as well.

Press P PROG ▷ to continue onto OUTP H* P_.

6. OUTP H* P_

This mode displays the status of components and outputs. If the output signal is detected, an identifying letter is displayed (see below), followed by an "*". If the output is off, "_" is displayed.

"H" = Heat output
"P" = Pressure output (pressure fryers only)

If heat is on, "H*" shows in display. If heat is off, "H_" shows in display. If controls senses a problem with the heat output, "H*" shows in display, with the "*" flashing.

If pressure is on, "P*" shows in display. If pressure is off, "P_" shows in display. If controls senses a problem with the pressure output, "P*" shows in display, with the "*" flashing.

Press ▼ DOWN to view the amp "DRAW" status of each output. "H ✓" and "P ✓" in the display means the amps are good. A flashing "X" behind the H or P means too much current.

Press ▼ DOWN to view the No Connect/Ground ("NC/GND") status of each output. This monitors a possible problem with the relays on the output PC board.

"H ✓" and "P ✓" in the display means everything on the output PC board is good. A flashing "X" behind the H or P means a problem exists.

Press ▼ DOWN to view the outputs and inputs (see step 10) together.

3-18. INFORMATION MODE (Continued)

Press P PROG ▷ and "6. PMP_ AIR_" shows in display.

Press ▼ DOWN to view the amp "DRAW" status of the pump motor output and air valve output. "PMP ✓" and "AIR ✓" in the display means the amps are good. A flashing "X" behind the "PMP" or "AIR" means too much current.

Press ▼ DOWN to view the No Connect/Ground ("NC/GND") status of each output. This monitors a possible problem with the relays on the output PC board.

Press P PROG ▷ to continue onto the OIL TMP reading.

7. OIL TMP

This step shows the present peanut oil temperature. The display shows "7. OIL TMP (temp.)".

Press P PROG ▷ to continue onto the CPU TMP reading.

8. CPU TMP

This step shows the present PC board temperature.

Press P PROG ▷ to continue onto the ANALOG reading.

9. ANALOG <1> 2.86V

This step displays the present status of any channel of the controller's a to d converter. This feature may be useful to a technician troubleshooting a problem with the fryer or controller.

The displayed value can be toggled between volts and bits by pressing 0. If the displayed value has a decimal point, it is voltage (0 to 5 VDC). If no decimal point is shown, the value is a-to-d bits (0 - 4095).

NOTICE

Press and hold P PROG ▷ to exit Information Mode at any time, or after 2 minutes, controls automatically exit back to normal operation.