Installation, Operation, and Maintenance Instructions

Electric Marine Fryer

Model: 130F-208VM
130F-240VM
130F-440VM
130F-480VM

Star Manufacturing International
10 Sunnen Drive
St. Louis, MO.63143-3800
Ph: 314-781-2777 Fax: 314-781-2714
WWW.STAR-MFG.COM

Part Number: 2M-W479
Rev.A
May 15, 2007

THE INFORMATION IN THIS MANUAL IS CRUCIAL AND MUST BE RETAINED FOR FUTURE REFERENCE. READ, UNDERSTAND AND FOLLOW THE INSTRUCTIONS AND WARNINGS CONTAINED IN THIS MANUAL.

DANGER	**POTENTIALLY HAZARDOUS SITUATION, WHICH, IF NOT AVOIDED, COULD RESULT IN DEATH.**
WARNING	**POTENTIALLY HAZARDOUS SITUATION, WHICH, IF NOT AVOIDED, COULD RESULT IN DEATH OR SERIOUS INJURY.**
CAUTION	**POTENTIALLY HAZARDOUS SITUATION WHICH, IF NOT AVOIDED, MAY RESULT IN MINOR OR MODERATE INJURY.**
NOTICE	**Helpful operation and installation instructions and tips are present.**

FOR YOUR SAFETY

DO NOT STORE OR USE GASOLINE OR OTHER FLAMMABLE VAPORS AND LIQUIDS NEAR THIS OR ANY OTHER APPLIANCE.

WARNING: IMPROPER INSTALLATION, ADJUSTMENT, ALTERATION, SERVICE OR MAINTENANCE CAN CAUSE PROPERTY DAMAGE, INJURY OR DEATH. READ THE INSTALLATION, OPERATING AND MAINTENANCE INSTRUCTIONS THOROUGHLY BEFORE INSTALLING OR SERVICING THIS EQUIPMENT.

Model #:	**Purchased from:**
Serial #:	**Location:**
Date purchased:	**Date installed:**
Purchase order #:	**For service, call:**

WARNING	**THIS EQUIPMENT IS APPROVED FOR INSTALLATION ONLY ON VESSELS GREATER THAN 65 FEET IN LENGTH, IN ACCORDANCE WITH USCG REGULATIONS IN TITLE 46 CFR 110-113**

TABLE OF CONTENTS

CHAPTER **PAGE**

1. Table Of Contents 3
2. List Of Illustrations 4
3. Read First 5
4. Specification Sheet 7
5. Leg Specification 9
6. Equipment Description 11
7. Unpacking 11
8. Installation 12
9. Operation 13
10. Maintenance & Cleaning 15
11. Wiring Diagram 18

List Of Illustrations

Illustration **Page**

1. Specification Sheet 7
2. Leg Layout 9
3. Oil Fill Level 13
4. Wiring Diagram 18

CAUTION	**EACH UNIT IS EXTREMELY HEAVY. FOR SAFE HANDLING, INSTALLER SHOULD OBTAIN HELP AS NEEDED, OR EMPLOY APPROPRIATE MATERIALS HANDLING EQUIPMENT (SUCH AS A FORKLIFT, DOLLY, OR PALLET JACK) TO REMOVE THE UNIT FROM THE SKID AND MOVE IT TO THE PLACE OF INSTALLATION.**	
CAUTION	**ANY STAND, COUNTER OR OTHER DEVICE ON WHICH THE FRYER WILL BE LOCATED MUST BE DESIGNED TO SUPPORT THE WEIGHT OF THE FRYER.**	
CAUTION	**SHIPPING STRAPS ARE UNDER TENSION AND CAN SNAP BACK WHEN CUT.**	
DANGER	**THIS APPLIANCE MUST BE GROUNDED AT THE TERMINAL PROVIDED. FAILURE TO GROUND THE APPLIANCE COULD RESULT IN ELECTROCUTION AND DEATH.**	DANGER HIGH VOLTAGE
WARNING	**INSTALLATION OF THE UNIT MUST BE DONE BY PERSONNEL QUALIFIED TO WORK WITH ELECTRICITY AND PLUMBING. IMPROPER INSTALLATION CAN CAUSE INJURY TO PERSONNEL AND/OR DAMAGE TO EQUIPMENT. UNIT MUST BE INSTALLED IN ACCORDANCE WITH ALL APPLICABLE CODES.**	
NOTICE	**The data plate is located behind the access door, over the tank drain. The fryer voltage, wattage, serial number, wire size, and clearance specifications are on the data plate. This information should be carefully read and understood before proceeding with the installation.**	
NOTICE	**The installation of any components such as a vent hood, grease extractors, fire extinguisher systems, must conform to their applicable National, State and locally recognized installation standards.**	
WARNING	**MAKE SURE THE MAIN POWER SUPPLY TO THE FRYER IS TURNED OFF AT THE SOURCE PRIOR TO CONNECTING POWER TO THE FRYER.**	
CAUTION	**BE SURE THE POWER SUPPLY VOLTAGE MATCHES THE VOLTAGE SPECIFIED ON THE DATA PLATE.**	
WARNING	**NEVER ENERGIZE THE HEATING ELEMENTS WITH NO OIL IN THE KETTLE OR WITH THE OIL LEVEL MORE THAN 3-INCHES FROM THE LOWER FILL LEVEL**	
WARNING	**ALWAYS TURN THE FRYER POWER SWITCH OFF BEFORE LIFTING THE HEATING ELEMENTS OUT OF THE FRYER OIL.**	
CAUTION	**ALWAYS KEEP THE AREA NEAR THE APPLIANCE FREE FROM COMBUSTIBLE MATERIALS.**	
CAUTION	**KEEP FLOOR IN FRONT OF EQUIPMENT CLEAN AND DRY. IF SPILLS OCCUR, CLEAN IMMEDIATELY, TO AVOID THE DANGER OF SLIPS OR FALLS.**	
WARNING	**KEEP WATER AND SOLUTIONS OUT OF CONTROLS. NEVER SPRAY OR HOSE CONTROL CONSOLE, ELECTRICAL CONNECTIONS, ETC.**	

CAUTION	**MOST CLEANERS ARE HARMFUL TO THE SKIN, EYES, MUCOUS MEMBRANES AND CLOTHING. PRECAUTIONS SHOULD BE TAKEN TO WEAR RUBBER GLOVES, GOGGLES OR FACE SHIELD AND PROTECTIVE CLOTHING. CAREFULLY READ THE WARNING AND FOLLOW THE DIRECTIONS ON THE LABEL OF THE CLEANER TO BE USED.**	
NOTICE	**Service on this or any other, STAR appliance must be performed by qualified personnel only. Consult your authorized service agent directory or call the factory at 1-800-807-9054 or visit our website** WWW.STAR-MFG.COM. **For the service agent nearest you.**	
WARNING	**BOTH HIGH AND LOW VOLTAGES ARE PRESENT INSIDE THIS APPLIANCE WHEN THE UNIT IS PLUGGED/WIRED INTO A LIVE RECEPTACLE. BEFORE REPLACING ANY PARTS, DISCONNECT THE UNIT FROM THE ELECTRIC POWER SUPPLY.** **DO NOT THROW ICE INTO THE FRYER BASKET WHILE THE UNIT IS HOT. FAILURE TO COMPLY MAY RESULT IN SERIOUS INJURY AND MAY DAMAGE THE EQUIPMENT.**	
CAUTION	**USE OF ANY REPLACEMENT PARTS OTHER THAN THOSE SUPPLIED BY Star Manufacturing OR THEIR AUTHORIZED DISTRIBUTORS CAN CAUSE BODILY INJURY TO THE OPERATOR AND DAMAGE TO THE EQUIPMENT AND WILL VOID ALL WARRANTIES.**	

F-28SM & R-28SM

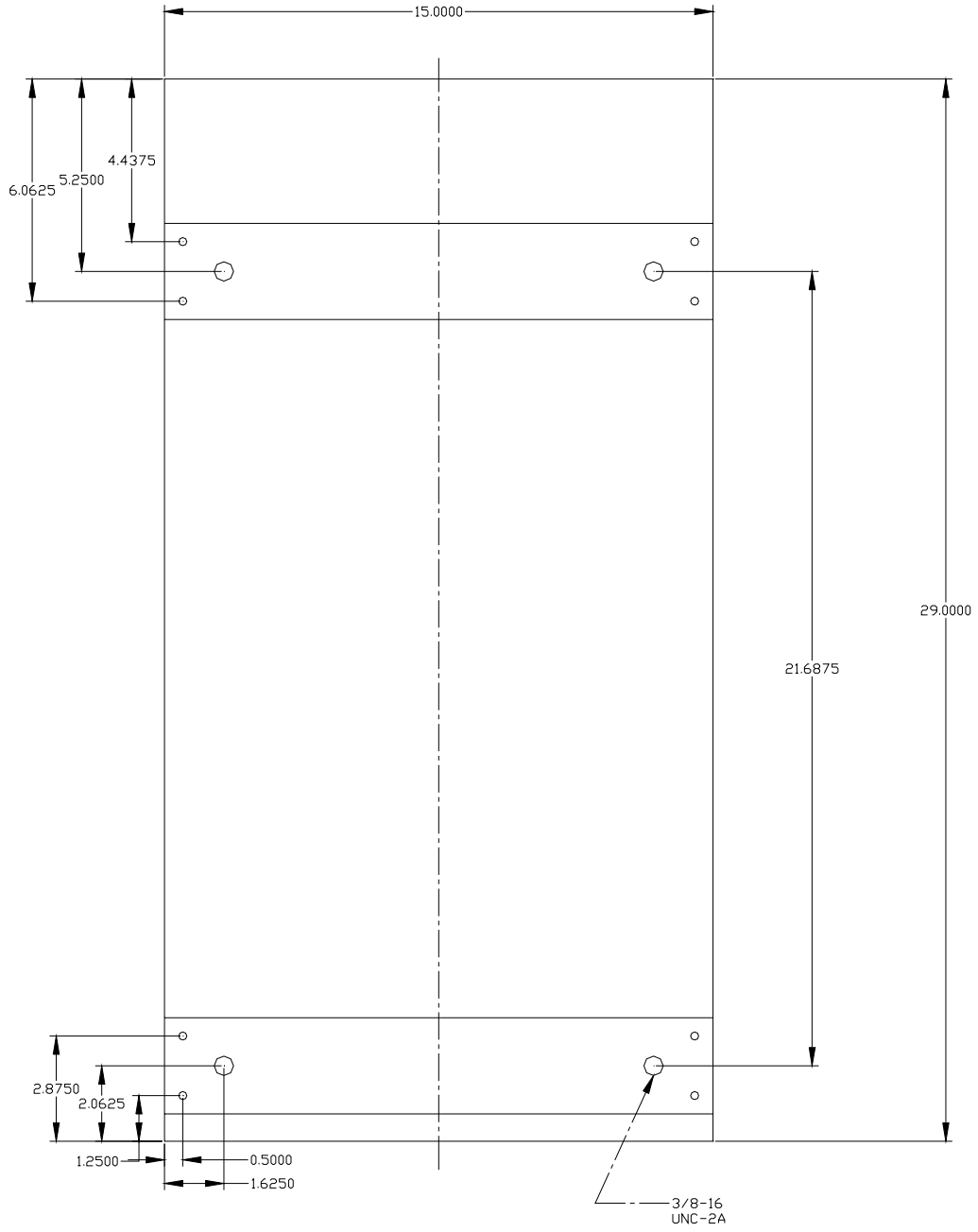
15.0000
6.0625
5.2500
4.4375
29.0000
21.6875
2.8750
2.0625
1.2500
0.5000
1.6250
3/8-16
UNC-2A

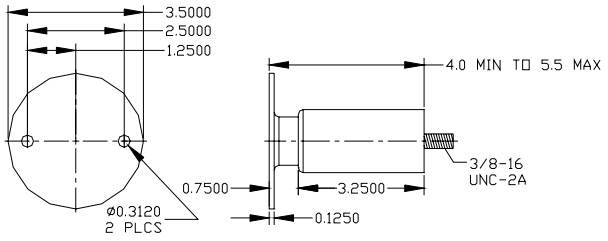
3.5000
2.5000
1.2500
4.0 MIN TO 5.5 MAX
3/8-16
UNC-2A
0.7500
3.2500
ø0.3120
2 PLCS
0.1250

C-28SM

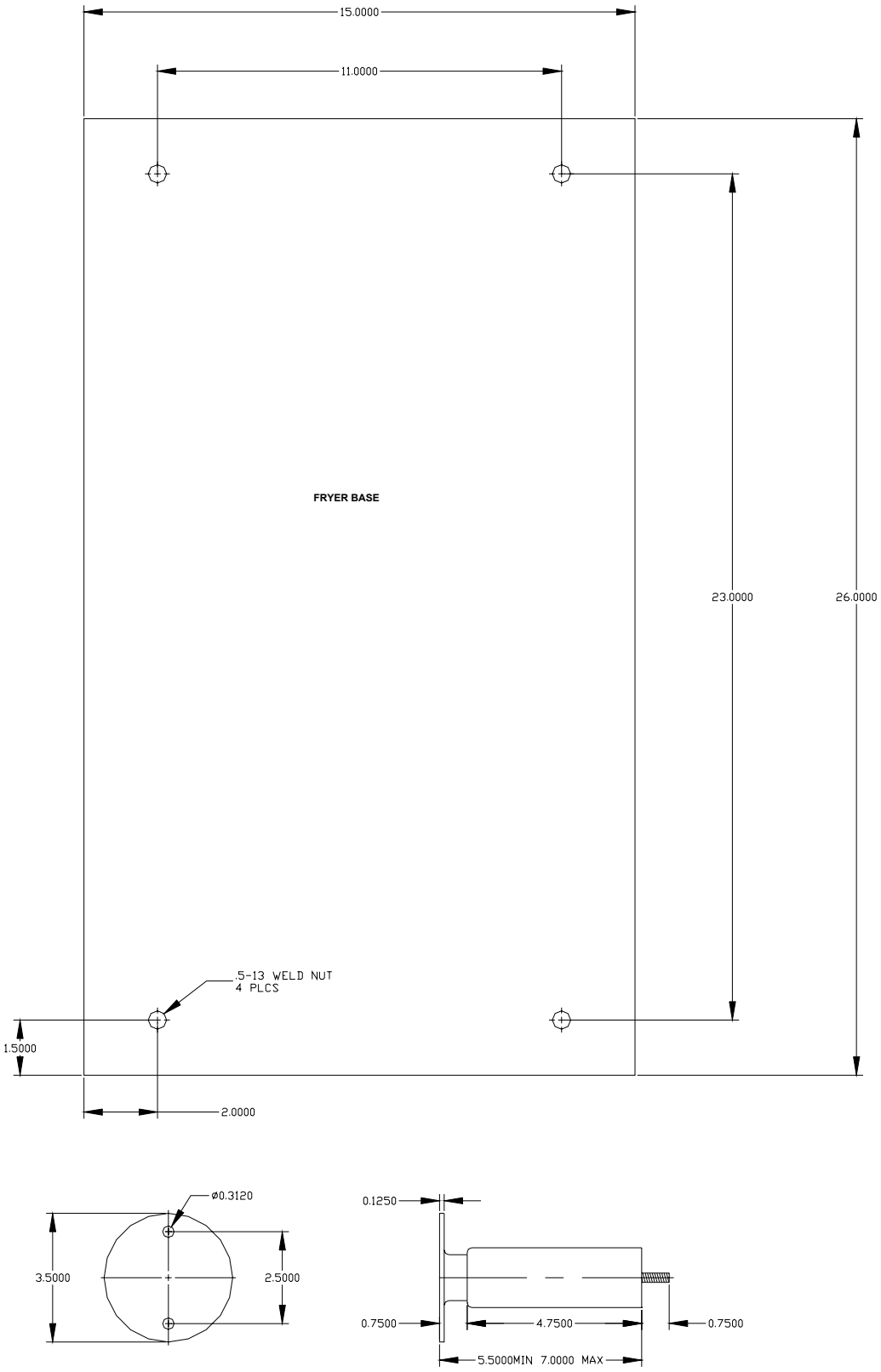
15.0000
11.0000
FRYER BASE
23.0000
26.0000
.5-13 WELD NUT
4 PLCS
1.5000
2.0000
ø0.3120
3.5000
2.5000
0.1250
0.7500
4.7500
0.7500
5.5000MIN 7.0000 MAX

Equipment Description

Items

- 1 ea. C-28M or 1ea. F-28M or 1ea R-28M
- 4 ea. 6”, Bolt down legs (F-28M)
- 4 ea. 4”, Bolt down legs (C-28M)
- 1 ea. Operation Manual
- 1 ea. Marine Handle

Fryer Controls

The Fryer comes with a “ON / OFF toggle switch, one mechanical thermostat that has a temperature range of 200°F -400°F and three indicator lamps for power, heat, and over temp. In addition to the standard controls, the fryer comes with a power interrupt terminal block, a shunt trip terminal block and an over temperature test switch.

Unpacking

CAUTION	**EACH IS EXTREMELY HEAVY. FOR SAFE HANDLING, INSTALLER SHOULD OBTAIN HELP AS NEEDED, OR EMPLOY APPROPRIATE MATERIALS HANDLING EQUIPMENT (SUCH AS A FORKLIFT, DOLLY, OR PALLET JACK) TO REMOVE THE UNIT FROM THE SKID AND MOVE IT TO THE PLACE OF INSTALLATION.**	
CAUTION	**ANY STAND, COUNTER OR OTHER DEVICE ON WHICH THE FRYER WILL BE LOCATED MUST BE DESIGNED TO SUPPORT THE WEIGHT OF THE FRYER.**	
CAUTION	**SHIPPING STRAPS ARE UNDER TENSION AND CAN SNAP BACK WHEN CUT.**	

Receiving the Fryer

Upon receipt, check for freight damage, both visible and concealed. Visible damage should be noted on the freight bill at the time of delivery and signed by the carrier's agent. Concealed loss or damage means loss or damage, which does not become apparent until the merchandise has been unpacked. If concealed loss or damage is discovered upon unpacking, make a written request for inspection by the carrier's agent within 15 days of delivery. All packing material should be kept for inspection. Do not return damaged merchandise to Star Manufacturing Company. File your claim with the carrier.

Location

Prior to un-crating, move the fryer as near its intended location as practical. The crating will help protect the unit from the physical damage normally associated with moving it through hallways and doorways.

Un-Crating

The fryer will arrive inside a wood frame covered by a cardboard box and strapped to a skid. Remove the cardboard cover, cut the straps and remove the wood frame. The fryer may now be removed from the skid**.**

Installing the Legs

To install the legs, place some cardboard on the floor and gently tip the fryer portion onto its side. A threaded weld nut is provided in each of the four corners of the unit. Thread each leg into the threaded weld nuts and lift the fryer back onto the legs. (See “Leg Specification”).

DANGER	**THIS APPLIANCE MUST BE GROUNDED AT THE TERMINAL PROVIDED. FAILURE TO GROUND THE APPLIANCE COULD RESULT IN ELECTROCUTION AND DEATH.**
WARNING	**INSTALLATION OF THE UNIT MUST BE DONE BY PERSONNEL QUALIFIED TO WORK WITH ELECTRICITY AND PLUMBING. IMPROPER INSTALLATION CAN CAUSE INJURY TO PERSONNEL AND/OR DAMAGE TO EQUIPMENT. UNIT MUST BE INSTALLED IN ACCORDANCE WITH ALL APPLICABLE CODES.**
NOTICE	**The data plate is located behind the access door, over the tank drain. The fryer voltage, wattage, serial number, wire size, and clearance specifications are on the data plate. This information should be carefully read and understood before proceeding with the installation.**
NOTICE	**The installation of any components such as a vent hood, grease extractors, fire extinguisher systems, must conform to their applicable National, State and locally recognized installation standards.**

Electrical Connection

A 1¼" knockout is provided on the unit for electrical connection (see "Specification Sheet for knockout location & wiring diagram for proper terminal block connection & phasing).

The electrical connection must be made in accordance with local codes or in the absence of local codes with **National Electrical Code** latest edition (in Canada use**: CSA STD. C22.1**).

Safety Circuit Connections

Fire Control Shutoff

Two terminals are provided on the four pole terminal block for connection to an external fire control system if required. A jumper is provided across two of these terminals when the fryer leaves the factory. The jumper on this terminal block is in series with the power switch circuit. If connection to a fire control system is required, remove this jumper and supply a relay contact closure to maintain this closed circuit. If the fire control system does not have this type of output, a separate relay must be provided to interface the system. **DO NOT APPLY VOLTAGE TO THIS CONNECTION**.

Shunt Trip Circuit

Two terminals are provided on the four pole terminal block for a shunt trip circuit. Connect to the shunt terminals of the main circuit breaker.

The Fryer can now be connected to power.

CAUTION	**BE SURE THE POWER SUPPLY VOLTAGE MATCHES THE VOLTAGE SPECIFIED ON THE DATAPLATE.**

CAUTION **NEVER ENERGIZE THE HEATING ELEMENTS WITH NO OIL IN THE KETTLE OR WITH THE OIL LEVEL MORE THAN 3-INCHES FROM THE LOWER FILL LEVEL**

Filling the Fryer

Fill the fryer with cooking oil. There are two fill marks on the sides of the kettle. The oil level should be maintained between the upper and lower marks. When the elements are out of the unit the oil should not sink below the bottom fill mark and when the elements are in the oil it should not rise above the top fill mark.

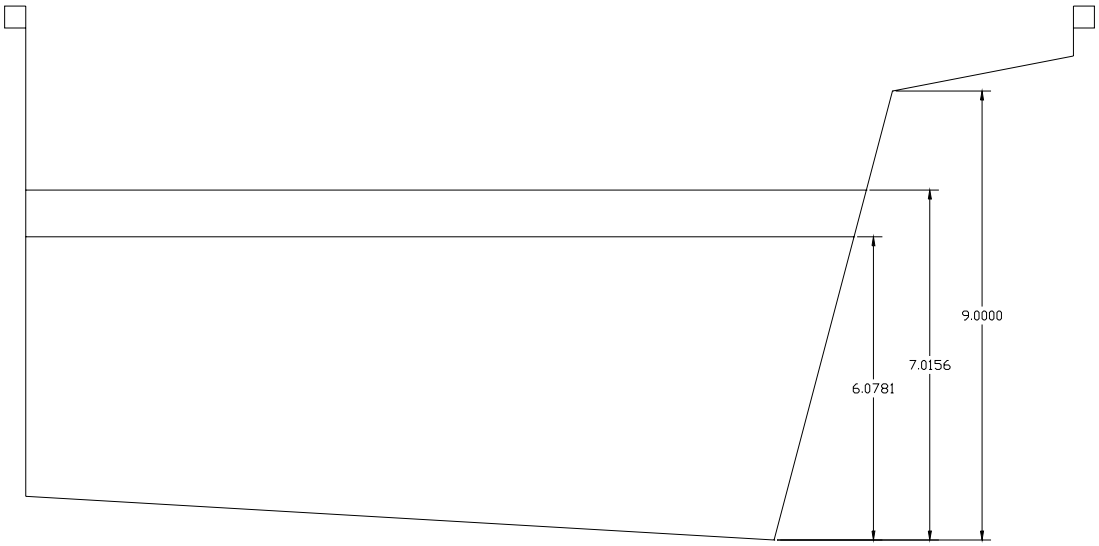

Turning the Fryer On

The power switch on the control box at the front of the fryer energizes the control circuits. When this switch is on, the “power” indicator lamp will be illuminated.

Setting the Temperature

Turn the temperature selector dial on the thermostat to the desired temperature setting. This control is located above the elements at the rear of the kettle. The “heat” indicator lamp will illuminate indicating power is applied to the heating elements.

Over-Temperature Indicator

The lamp marked “over temp” will illuminate if the oil reaches an over temperature condition. The over temperature thermostat shuts off the fryer before the oil reaches a dangerously high temperature.

CAUTION **ALWAYS TURN THE FRYER POWER SWITCH OFF BEFORE LIFTING THE HEATING ELEMENTS OUT OF THE FRYER OIL.**

Raising the Elements

The elements may be raised and locked in the up position. The latch is located on the rear top surface of the fryer and may be activated by lifting the handle at either side of the fryer.

Draining the Oil

A drain valve is provided at the left front of the fryer. A lever that is located inside the access panel is used to open and close the drain valve.

To drain the oil, make sure that the valve is closed and the oil is cool. Remove the steel cap from the drainpipe. Connect a drainpipe extension to the drainpipe. Move the lever into the open position and allow draining. Close valve after draining is complete and replace the end cap.

Controls

Power Switch- A toggle switch used to turn the unit on and off.

Pilot Lights- Lights that are located in the rear control panel area.

Power- Lights up when the power switch is in the "ON" position.

Heat- Lights up when the element contactors engage.

Over-temp- Lights up when the over-temperature thermostat trips.

NOTICE **Follow all established safety precautions as described in you operations manual.**

Testing Procedures for the Lang Model 130F Safety System

Important: Heed warnings listed on pages 5 and 6 prior to proceeding with these test procedures**!**

The limiting controls test switch, located at the front control panel, is a three-position switch used to test the first limit thermostats. To test the first limit thermostat push the switch to position "1" and hold until the audible alarm sounds and the over-temp light comes on (this will happen when the oil reaches a temperature of approximately 450ºF (232ºC). Next release the switch, if all the power to the fryer goes off, this indicates that the second over temperature has tripped as well – and has caused the "shunt trip" circuit breaker to activate. Note the "shunt trip" breaker is not located within the fryer.

If it is required that the second over temperature thermostat is tested independently (or if the power remains on the fryer with the switch in its normal, center, position), allow the oil to cool to approximately 400ºF (204ºC). Restore power to the unit by resetting the shunt trip circuit breaker (if necessary). Pull the over-temp test switch to position "2" and hold until the "shunt trip" circuit breaker is activated (this will happen, when the oil reaches a temperature of approximately 450ºF (232ºC).

Allow the fryer to cool down. Restore power to the unit by resetting the "shunt trip" circuit breaker.

CAUTION	**ALWAYS KEEP THE AREA NEAR THE APPLIANCE FREE FROM COMBUSTIBLE MATERIALS.**
CAUTION	**KEEP FLOOR IN FRONT OF EQUIPMENT CLEAN AND DRY. IF SPILLS OCCUR, CLEAN IMMEDIATELY, TO AVOID THE DANGER OF SLIPS OR FALLS.**
WARNING	**KEEP WATER AND SOLUTIONS OUT OF CONTROLS. NEVER SPRAY OR HOSE CONTROL CONSOLE, ELECTRICAL CONNECTIONS, ETC.**
CAUTION	**MOST CLEANERS ARE HARMFUL TO THE SKIN, EYES, MUCOUS MEMBRANES AND CLOTHING. PRECAUTIONS SHOULD BE TAKEN TO WEAR RUBBER GLOVES, GOGGLES OR FACE SHIELD AND PROTECTIVE CLOTHING. CAREFULLY READ THE WARNING AND FOLLOW THE DIRECTIONS ON THE LABEL OF THE CLEANER TO BE USED.**

Fryer Cleaning

Daily Cleaning

It is recommended the fryer oil be kept as clean as possible by straining regularly (several times a day) and filtering daily. This will lengthen the life of your oil and improve the performance of the fryer.

Weekly or As Required

1. Turn power switch off.
2. Remove the baskets, let baskets drain and then set aside.
3. Raise heating elements out of oil and lock in up position.
4. Drain Oil (See Draining the oil on previous page).
5. Remove loose food particles from heating units with spatula and wire brush.
6. Flush out scrapings and sediment with a small quantity of hot oil, and allow draining thoroughly.
7. Close drain valve and fill with a fryer cleaning agent or soapy solution of non-corrosive grease dissolving cleaner.
8. Set thermostat to 250°F (121ºC).and boil solution for 15 to 20 minutes.
9. Drain solution from kettle. Refill with water and add 1/2 cup of white vinegar to neutralize alkaline left by soap. Bring solution to a boil and allow to stand for a few minutes.
10. Drain kettle and rinse with clear, hot water. Dry kettle and heating units thoroughly, and close drain valve.
11. Refill fryer with oil, and lower heating elements slowly.
12. Operate fryer as normal.

Emergency Lockout

Locate power disconnect at source and remove power from fryer.

Long Term Storage

Secure fryer from power.
Drain oil from kettle.
Apply a generous amount of Lang Mfg. Prima Shine (72804-41) to the stainless steel.

Temperature Control

A bulb thermostat located near the right heating element as the fryer is viewed from the front provides temperature control. This thermostat controls the #1 contactor. The control portion of the thermostat is located in the component box at the back of the fryer.

Over-Temperature Protection

The over-temperature thermostat is located next to the left heating element and provides protection in case of malfunction of the temperature control. It will open both contactors removing all power from the heating elements.

Optional Shunt Trip Protection

The shunt trip temperature thermostat located next to the center-heating element provides protection in case of malfunction of the temperature control. It is used in conjunction with a shunt trip circuit, which will disconnect power to the fryer at the circuit breaker.

Thermostat Bulbs Check

The three thermostat bulbs, (temperature control thermostat bulb, over-temp thermostat bulb and shunt trip thermostat bulb), are all connected to the fryer heating elements. The brackets that hold these bulbs in place should be checked on a regular basis for tightness. If any of the brackets/ bulbs become loose, the brackets that hold the bulbs should be tightened right away.

Component Access

The temperature control thermostat, over temperature thermostat, and shunt trip thermostat are all located in the component box at the back of the fryer as well as the indicator lamps. This box may be removed by removing the 4 sheet metal screws located beneath the box on the left and right sides of the fryer lower front. All other components are located at the base of the unit in the back or behind the access panel in the front to the unit.

In the event the fryer is built into a location, all maintenance may be done from the front by removing the oil pot to gain access to the components. To remove the pot, the control box must be removed as above. Also, remove the small section of sheet metal baffle held on by 2 sheet metal screws, located just above the drain valve. The front of the pot may now be lifted up and moved forward until the rear of the pot will rotate up and out. The baffles behind the pot may be removed by taking out the 4 screws. This exposes the components.

Calibration

The Fryer calibration procedure consists of accessing and adjusting the temperature thermostat. The temperature control thermostat is located behind the component box on the top at the back of the fryer.

Calibration Check

- Remove the elements from the fryer tank and wrap a temperature-sensing probe around the capillary tube of the temperature control thermostat.
- Place elements back in fryer tank and set thermostat to 350°F.
- Allow fryer to reach temperature and cycle for 15 minutes.
- After fryer has cycled for 15 minutes, record the on and off temperatures for three cycles and average these temperatures together (add together and divide by six), the temperature should be between 340-360°F.

Calibration Adjustment

The average temperature should only be off by 340-360°F (171-182ºC).. If temperature is off then a 1/16" flat blade screwdriver with a 2" shaft is required to make adjustments on the thermostat.

- Maintain the temperature at 350°F. (177ºC)
- Without turning the thermostat, remove the knob.
- Locate the adjustment screw at the base of the shaft and insert the screwdriver.
- Grasp the shaft and turn the screw, counter clockwise to increase and clockwise to decrease, (1/8 of a turn will move the temperature 5-7 °F in either direction).
- Reinstall the oven knob and recheck the oven temperature.

NOTICE **Service on this, or any other, STAR appliance must be performed by qualified personnel only. Consult your authorized service agent directory or call the factory at 1-800-807-9054 or visit our website** WWW.STAR-MFG.COM **for the service agent nearest you.**

WARNING **BOTH HIGH AND LOW VOLTAGES ARE PRESENT INSIDE THIS APPLIANCE WHEN THE UNIT IS PLUGGED/WIRED INTO A LIVE RECEPTACLE. BEFORE REPLACING ANY PARTS, DISCONNECT THE UNIT FROM THE ELECTRIC POWER SUPPLY.**

CAUTION **USE OF ANY REPLACEMENT PARTS OTHER THAN THOSE SUPPLIED BY Star Manufacturing OR THEIR AUTHORIZED DISTRIBUTORS CAN CAUSE BODILY INJURY TO THE OPERATOR AND DAMAGE TO THE EQUIPMENT AND WILL VOID ALL WARRANTIES.**

Troubleshooting

Not Heating

Probable Cause	Corrective Action
Incorrect wiring	Confirm that fryer is getting proper voltage. Confirm that fryer is phased correctly.
Defective transformer	Confirm that transformer is getting correct voltage. Confirm that transformer is putting out correct voltage.
Defective Fuses	Replace fuses.
Defective Contactor	Confirm that contactor is getting correct voltage on the coil.
Defective Thermostat	Confirm that thermostat is getting correct voltage. Confirm that thermostat is operating properly.
Defective Element	Confirm that element is getting correct voltage Check element for normal operation. (11.5 Amps)

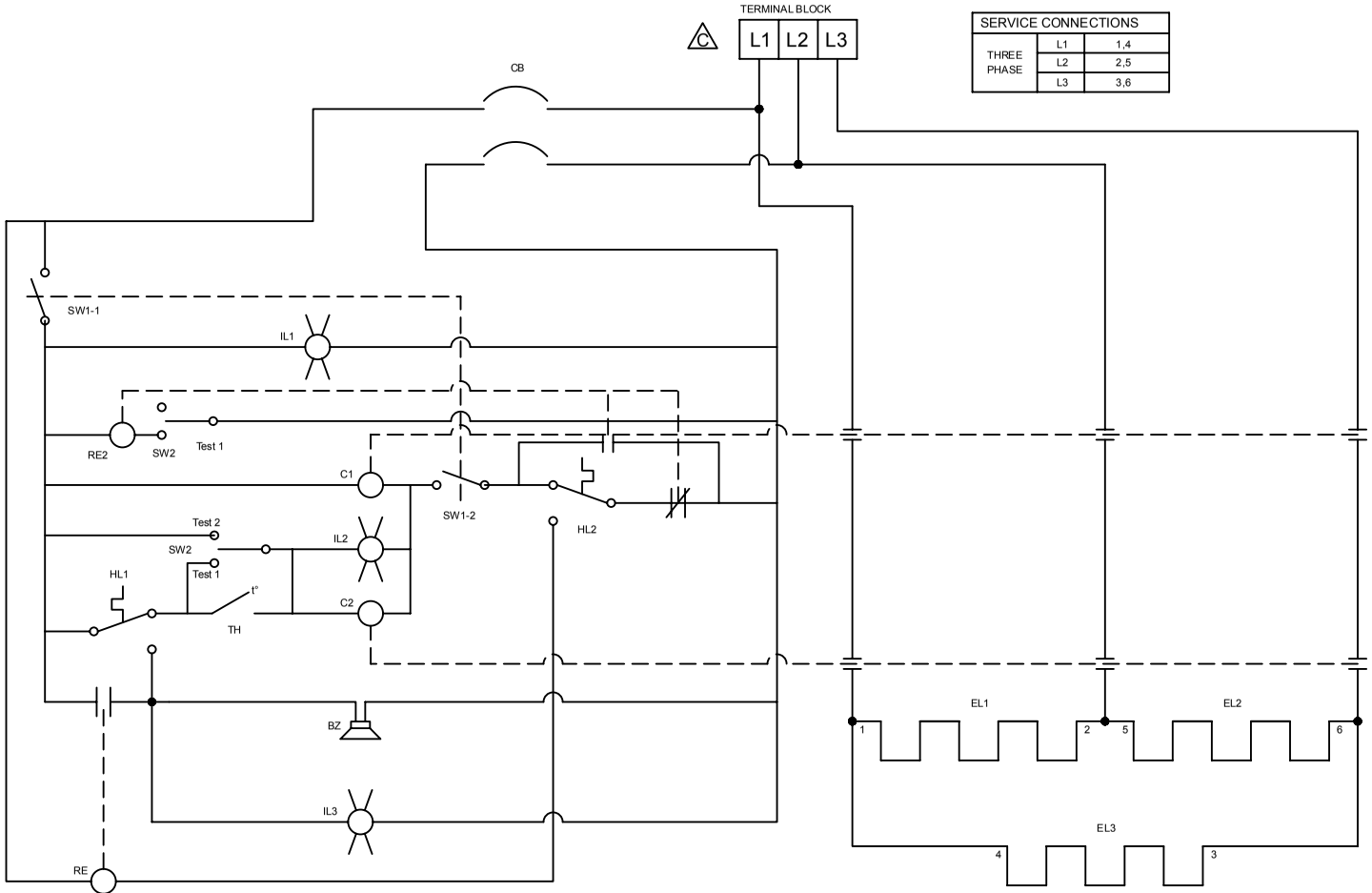

SERVICE CONNECTIONS		
THREE PHASE	L1	1,4
	L2	2,5
	L3	3,6

TB	TERMINAL BLOCK, 3 POLE
BZ	BUZZER, 240 V
C1 & C2	CONTACTOR, 3 POLE, 240 V COIL
CB	CIRCUIT BREAKER, 2/10 AMP
EL1	ELEMENT (208, 220, OR 240 V)
EL2	ELEMENT (208, 220, OR 240 V)
EL3	ELEMENT (208, 220, OR 240 V)
HL1	THERMOSTAT, HI-LIMIT, 425 F
HL2	THERMOSTAT, HI-LIMIT, 450 F
IL1	LAMP, INDICATOR, POWER, GREEN
IL2	LAMP, INDICATOR, HEAT, AMBER
IL3	LAMP, INDICATOR, OVERTEMP, RED
RE & RE2	RELAY, 2 POLE, 240 V COIL
SW1	SWITCH, TOGGLE, POWER
SW2	SWITCH, TOGGLE, HILIMIT BYPASS
TH	THERMOSTAT, REGULATING, 400 F
ITEM	DESCRIPTION

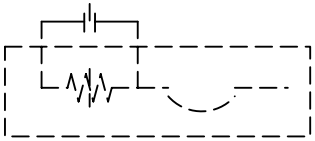

SHUNT-TRIP CIRCUIT BREAKER
PROVIDED BY OTHERS

STAR MODEL	LANG MODEL	VOLT	KW				AMPS 3 PHASE		
			L1-L2	L2-L3	L1-L3	TOTAL	L1	L2	L3
130FM	C28SM	208	4.0	4.0	4.0	12	33.3	33.3	33.3
		220	3.4	3.4	3.4	10.2	26.5	26.5	26.5
		240	4.0	4.0	4.0	12.0	28.9	28.9	28.9

THIS DRAWING CONTAINS INFORMATION CONFIDENTIAL TO STAR MFG. INT'L. INC.
NO REPRODUCTION OR DISCLOSURE OF ITS CONTENTS IS PERMITTED.

MODELS:
C28-Marine 208-240VAC
130F- Marine 208-240VAC

Lang™
A Division of Star Mfg. Int'l, Inc.

2M-61116-20 Rev C

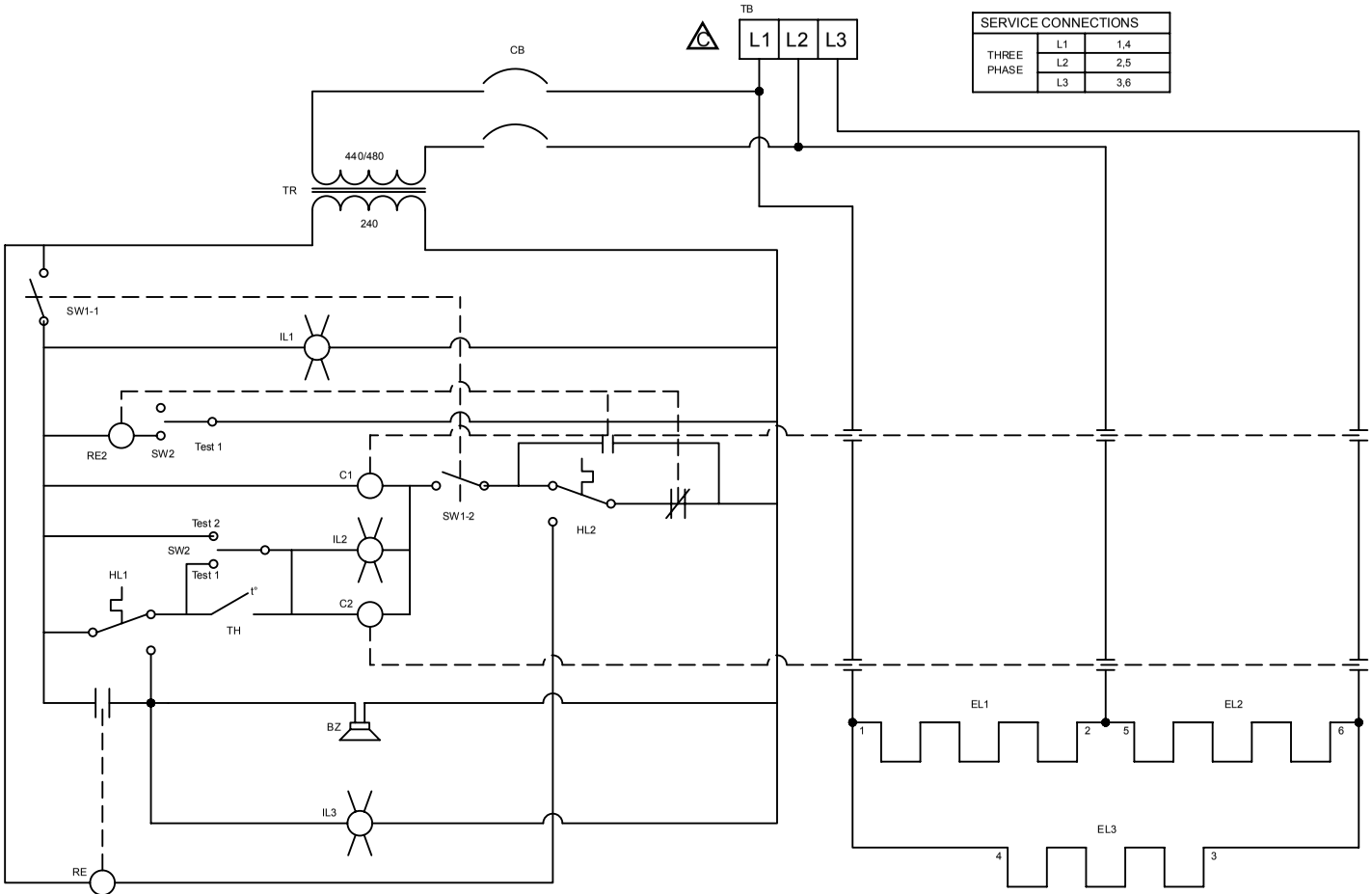

SERVICE CONNECTIONS		
THREE PHASE	L1	1,4
	L2	2,5
	L3	3,6

ITEM	DESCRIPTION
TB	TERMINAL BLOCK, 3 POLE
BZ	BUZZER, 240 V
C1 & C2	CONTACTOR, 3 POLE, 240 V COIL
CB	CIRCUIT BREAKER, 2/10 AMP
EL1	ELEMENT (380,415, 440, OR 480 V)
EL2	ELEMENT (380,415, 440, OR 480 V)
EL3	ELEMENT (380,415, 440, OR 480 V)
HL1	THERMOSTAT, HI-LIMIT, 425 F
HL2	THERMOSTAT, HI-LIMIT, 450 F
IL1	LAMP, INDICATOR, POWER, GREEN
IL2	LAMP, INDICATOR, HEAT, AMBER
IL3	LAMP, INDICATOR, OVERTEMP, RED
RE & RE2	RELAY, 2 POLE, 240 V COIL
SW1	SWITCH, TOGGLE, POWER
SW2	SWITCH, TOGGLE, HILIMIT BYPASS
TH	THERMOSTAT, REGULATING, 400 F
TR	TRANSFORMER

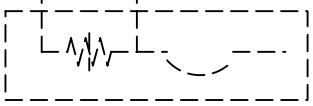

SHUNT-TRIP CIRCUIT BREAKER
PROVIDED BY OTHERS

STAR MODEL	LANG MODEL	VOLT	KW				AMPS 3 PHASE		
			L1-L2	L2-L3	L1-L3	TOTAL	L1	L2	L3
130FM	C28SM	380	4.0	4.0	4.0	12.0	15.3	15.3	15.3
		415	4.0	4.0	4.0	12.0	14.0	14.0	14.0
		440	4.0	4.0	4.0	12.0	13.2	13.2	13.2
		480	4.0	4.0	4.0	12.0	12.1	12.1	12.1

THIS DRAWING CONTAINS INFORMATION CONFIDENTIAL TO STAR MFG. INT'L. INC.
NO REPRODUCTION OR DISCLOSURE OF ITS CONTENTS IS PERMITTED.

MODELS:
C28-Marine 380-480VAC
130F- Marine 380-480VAC

Lang™
A Division of Star Mfg. Int'l, Inc.

2M-61116-21 Rev C 10/6/2003

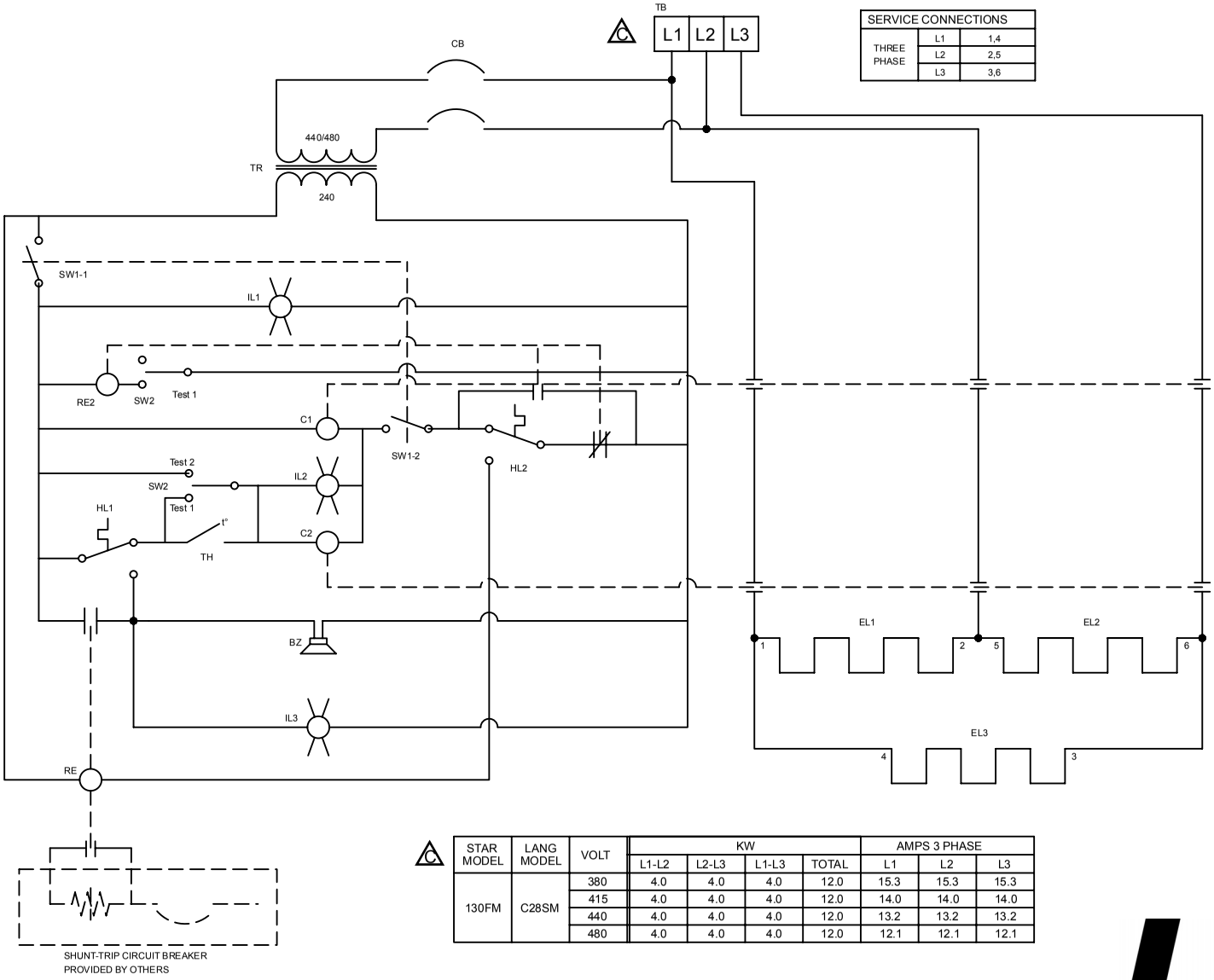

SERVICE CONNECTIONS		
THREE PHASE	L1	1,4
	L2	2,5
	L3	3,6

TB	TERMINAL BLOCK, 3 POLE
BZ	BUZZER, 240 V
C1 & C2	CONTACTOR, 3 POLE, 240 V COIL
CB	CIRCUIT BREAKER, 2/10 AMP
EL1	ELEMENT (380,415, 440, OR 480 V)
EL2	ELEMENT (380,415, 440, OR 480 V)
EL3	ELEMENT (380,415, 440, OR 480 V)
HL1	THERMOSTAT, HI-LIMIT, 425 F
HL2	THERMOSTAT, HI-LIMIT, 450 F
IL1	LAMP, INDICATOR, POWER, GREEN
IL2	LAMP, INDICATOR, HEAT, AMBER
IL3	LAMP, INDICATOR, OVERTEMP, RED
RE & RE2	RELAY, 2 POLE, 240 V COIL
SW1	SWITCH, TOGGLE, POWER
SW2	SWITCH, TOGGLE, HILIMIT BYPASS
TH	THERMOSTAT, REGULATING, 400 F
TR	TRANSFORMER
ITEM	DESCRIPTION

SHUNT-TRIP CIRCUIT BREAKER
PROVIDED BY OTHERS

STAR MODEL	LANG MODEL	VOLT	KW				AMPS 3 PHASE		
			L1-L2	L2-L3	L1-L3	TOTAL	L1	L2	L3
130FM	C28SM	380	4.0	4.0	4.0	12.0	15.3	15.3	15.3
		415	4.0	4.0	4.0	12.0	14.0	14.0	14.0
		440	4.0	4.0	4.0	12.0	13.2	13.2	13.2
		480	4.0	4.0	4.0	12.0	12.1	12.1	12.1

THIS DRAWING CONTAINS INFORMATION CONFIDENTIAL TO STAR MFG. INT'L. INC.
NO REPRODUCTION OR DISCLOSURE OF ITS CONTENTS IS PERMITTED.

MODELS:
C28-Marine 380-480VAC
130F- Marine 380-480VAC

Lang™
A Division of Star Mfg. Int'l, Inc.

2M-61116-21 Rev C 10/6/2003

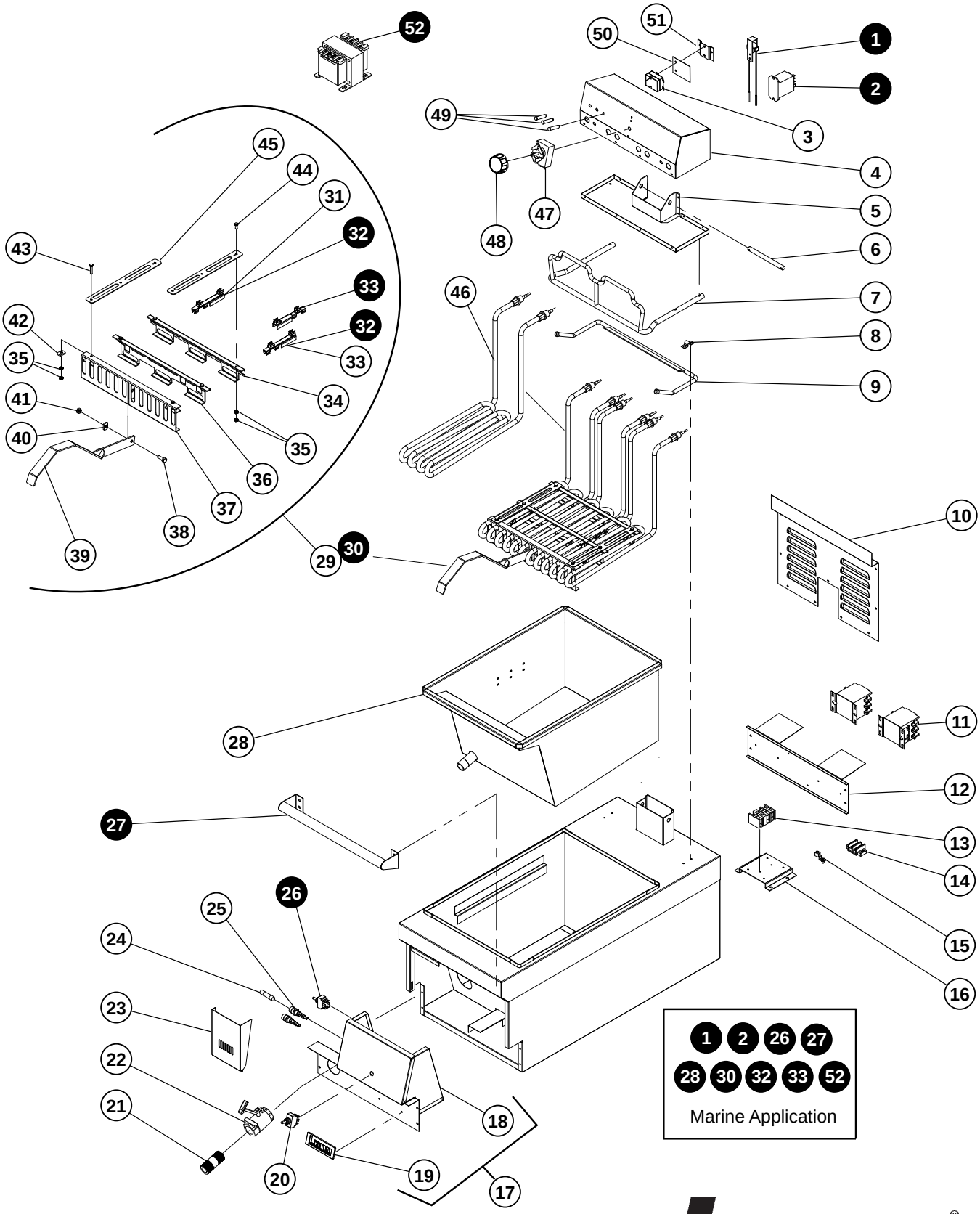

Model Commercial & Marine
130F Counter Model Fryer
C28 Counter Model Fryer

Lang®

SK2294 Rev. A 7/15/08

PARTS LIST

June 23, 2010, Rev B

Model No: 130F & C28
COMMERCIAL & MARINE ELECTRIC FRYER

130F Commerical & Marine Fryer				
Fig No.	**Part No**	**Qty**	**Description**	**Application**
1	2J-30802-01-1	1	BUZZER, MECHANICAL 240V W/WIRE	130F 208VM, 240VM, 440VM, 480VM
2	2E-30600-10	1	RELAY 2PDT 240V	130F 208VM, 240VM, 440VM, 480VM
3	2T-30401-13	1	STAT FXD TEMP 240VAC 450o	130F 208V, 240V, 480V
	2T-30401-33		STAT FXD TMP NEGBIAS 490°F	130FM MARINE
4	O9-C28-130	1	HEAD WRAP	130F 208VM, 240VM, 440VM, 480VM
	O9-C28-130-1		HEAD WRAP FOR TEST SWITCH	130F 208VM, 240VM, 440VM, 480VM
	O9-C28-135	2	HEAD END	ALL MODELS
5	O9-C28-136	1	HEAD PIVOT SUPPORT	ALL MODELS
	O9-C28-138		HEAD BOTTOM NO LIFT	ALL MODELS
6	O9-C28-137	1	HEAD PIVOT	ALL MODELS
7	2B-51100-02	1	BASKET HANGER ASSY (C28)	ALL MODELS
8	O9-60102-114	2	CLAMP	ALL MODELS
9	O9-C28-133	1	ELEMENT STOP A	ALL MODELS
10	O9-C28-117	1	REAR COVER	ALL MODELS
11	2E-30700-03	2	CONTC 3POLE 40A208-240VAC	ALL MODELS
12	O9-C28-111-2	1	CONTACTOR MOUNT SPOTWELD	ALL MODELS
13	2E-30500-09	1	TRM BLOCK 3 POLE SMALL 95	ALL MODELS
14	2E-30500-01	AR	TRM STRP 2 POLE 30A 300V	ALL MODELS
15	Y9-31200-02-1	1	GROUNDING LUG/+LABEL	ALL MODELS
16	O9-C28-315	1	TRANSFORMER MOUNT	09-60102-327
17	O9-60102-322	1	CONTROL BOX ASSY, w/labels	ALL MODELS
18	O9-C28-186	1	CONTROL BOX ASSY	ALL MODELS
19	K9-60301-43-1	1	DIE CAST LOG + TINNERMAN	ALL MODELS
20	2E-30303-06	1	SWT TOG ON-ON DPDT BLK	ALL MODELS
21	2K-70302-15	1	PIPE NIPPLE 1X 2 1/2 BLK	ALL MODELS
22	2V-70400-01	1	VALVE 1BALL NIC PLTD (NO	ALL MODELS
23	O9-C28-109-01	1	VALVE ACCESS PNL	ALL MODELS
24	2E-30900-15	2	FUSE 3 AMP AGC	130F 208V, 240V, 480V
25	2E-30901-02	2	FUS HLDR FOR 15AMP FUSE	130F 208V, 240V, 480V
26	2E-30303-13	1	SWT TOG ON-OFF-ON MOM MTL	ALL MODELS
27	O9-50300-49	1	GRAB BAR ASSY 15	130F 208VM, 240VM, 440VM, 480VM
28	O9-C28-118	1	BUCKET WELDMENT	ALL MODELS
29	O9-C28-182	1	ELEMENT ASSY. COMMERCIAL	130F 208V, 240V, 480V
30	O9-C28-181	1	ELEMENT ASSY. MARINE	130F 208VM, 240VM, 440VM, 480VM
31	O9-C28-174	1	EGO STAT HOLDER WELDMENT	130F 208V, 240V, 480V
32	O9-C28-184	2	OVER TEMP BULB BRKT	130F 208VM, 240VM, 440VM, 480VM
33	O9-C28-180	1	THERMOSTAT BULB BRKT	ALL MODELS
34	O9-C28-154	1	ELEMENT HOLDER BACK	ALL MODELS
35	2C-20301-45	6	NUT HEX 10-32 18-8 TOP	ALL MODELS
36	O9-C28-153	1	ELEMENT HOLDER MIDDLE	ALL MODELS
37	O9-C28-152	1	ELEMENT HOLDER FRONT	ALL MODELS
38	2C-20111-02	1	SCRW HXHD CAP 1/4-20X3/4	ALL MODELS

IMPORTANT: WHEN ORDERING, SPECIFY VOLTAGE OR TYPE GAS DESIRED
INCLUDE MODEL AND SERIAL NUMBER

Some items are included for illustrative purposes only and in certain instances may not be available.

Lang®

PARTS LIST

June 23, 2010, Rev B

Model No: 130F & C28
COMMERCIAL & MARINE ELECTRIC FRYER

130F Commerical & Marine Fryer				
Fig No.	**Part No**	**Qty**	**Description**	**Application**
39	O9-C28-158	1	HANDLE WELDMENT	ALL MODELS
40	2C-20305-05	1	WELD NUT S/S 1/4-20 2-EAR	ALL MODELS
41	2C-20303-01	1	NUT HX SS 1/4-20	ALL MODELS
42	O9-C28-155	2	ELEMENT CLAMP	ALL MODELS
43	2C-20111-13	1	SCRW HXHD CAP 10-32X1 SS	ALL MODELS
44	O9-C28-150	2	ELEMENT BRACKET SUPPORT	ALL MODELS
45	2C-20111-09	AR	SCRW HXHD CAP 10-32X1/2	ALL MODELS
46	2N-11110-39	3	ELMNT FRYER 480V 4KW C28	130F 480V AND 480VM
	2N-11110-43		ELMNT FRYER 208V 4KW C28	130F 208V AND 208VM
	2N-11110-44		ELMNT FRYER 240V 4KW C28	130F 240V AND 240VM
	2N-11110-45		ELMNT FRYER 380V 4KW C28	130F-380VM
	2N-11110-47		ELMNT FRYER 440V 4KW C28	130F 440VM
47	2T-30402-12	1	STAT ADJ 400o 24 C/T	ALL MODELS
48	2R-70700-01	1	KNOB BLNK UNIVERSAL BLACK	ALL MODELS
49	2J-31601-15	1	PILOT LT 250V 6LEAD AMBER	130F 208VM, 240VM, 440VM, 480VM
	2J-31601-16		PILOT LT 250V 6LEAD GREEN	130F 208VM, 240VM, 440VM, 480VM
	2J-31601-20		PILOT LT 250V 6LEAD RED	130F 208VM, 240VM, 440VM, 480VM
	Y9-31601-01-1	3	PILOT LT 250V W/TIN CLIP	130F 208V, 240V, 480V
50	O9-C28-131-2	2	OVERTEMP STAT INSULATOR	ALL MODELS
51	O9-C28-131-1	2	O.T. STAT SPACER	ALL MODELS
52	2E-31400-04	1	XFRMR 480/240VAC 100VA	130F-440VM, 480VM
	2E-31400-17		XFORMR 380/240VAC 100VA	130F-380VM
NI	2P-70900-01	1	CAP PLUG 1-5/16IDX1.89	

IMPORTANT: WHEN ORDERING, SPECIFY VOLTAGE OR TYPE GAS DESIRED
INCLUDE MODEL AND SERIAL NUMBER

Some items are included for illustrative purposes only and in certain instances may not be available.

Lang®

STAR MANUFACTURING
10 Sunnen Drive, St. Louis, MO 63143 U.S.A.
(800) 807-9054 (314) 781-2777
Parts & Service (800) 807-9054
www.star-mfg.com