Ice Machine Parts List for Series B0200 Models

BR0200A	**BD0203W**
BR0201W	**BY0204A**
BD0202A	**BY0205W**

B0200 CONTROL BOX

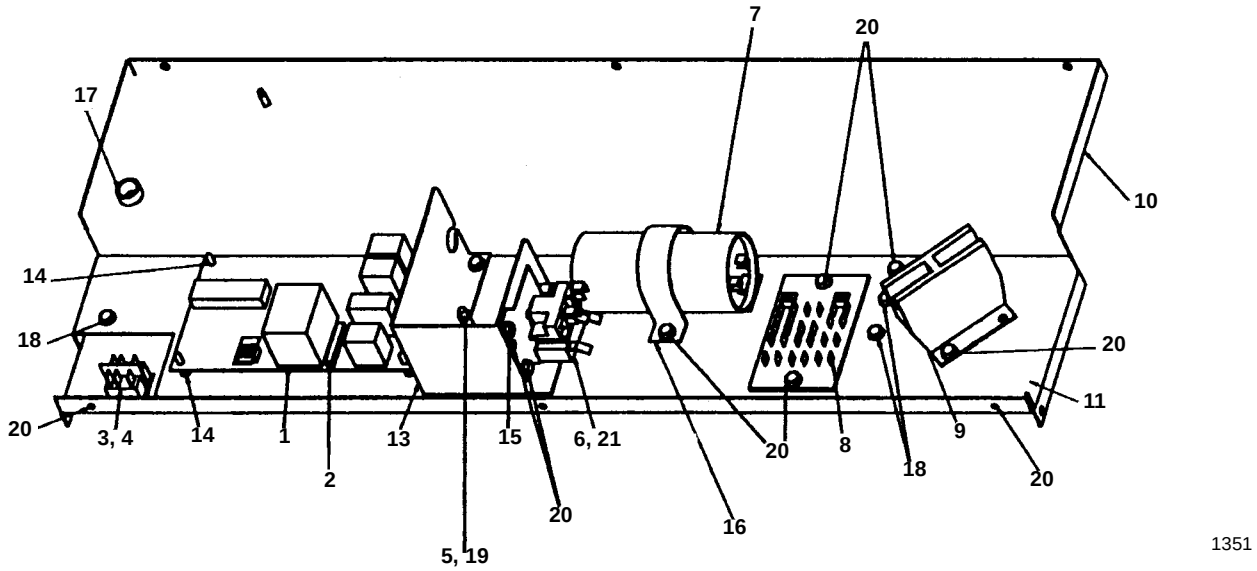

	DESCRIPTION	PART NO.
1	Control Board (For use with all voltages)	† 76-2800-3
2	Fuse for Control Board, 7 Amp	25-1100-3
2a	Mini-fuse for Control Board, .125 Amp*	† 25-1116-9
3	Toggle Switch only	23-0134-3
4	Toggle Switch With Wiring Harness	† 20-3105-9
5	High Pressure Cut-out Control	† 23-5536-9
6	Start Relay	85-0374-3
7	Start Capacitor	85-0371-3
8	Terminal Board With Wiring Harness	No Longer Available
9	Contactor, 120V*	† 20-0658-9
10	Control Box Base	† 601408-1
11	Control Box Panel	600934-1
12	Control Box Cover (Not shown)	† 601409-1
13	Shield for Control Board	600929-1
14	Support for Control Board	43-0225-3
15	Bracket for Mounting Relay	600492-1
16	Bracket for Capacitor	600452-1
17	Bushing, .625"	† 25-0016-9
18	Screw, Ground	† 52-0216-9
19	Screw for High Pressure Control	† 51-2166-9
20	Screw, #10-24 x 1/2"	† 52-0206-9
21	Screw, #8-32 x 1/4"	† 50-2672-9

* See Page 8 for 230V Applications

† Refer to Cross Reference Guide

B0200 EVAPORATOR

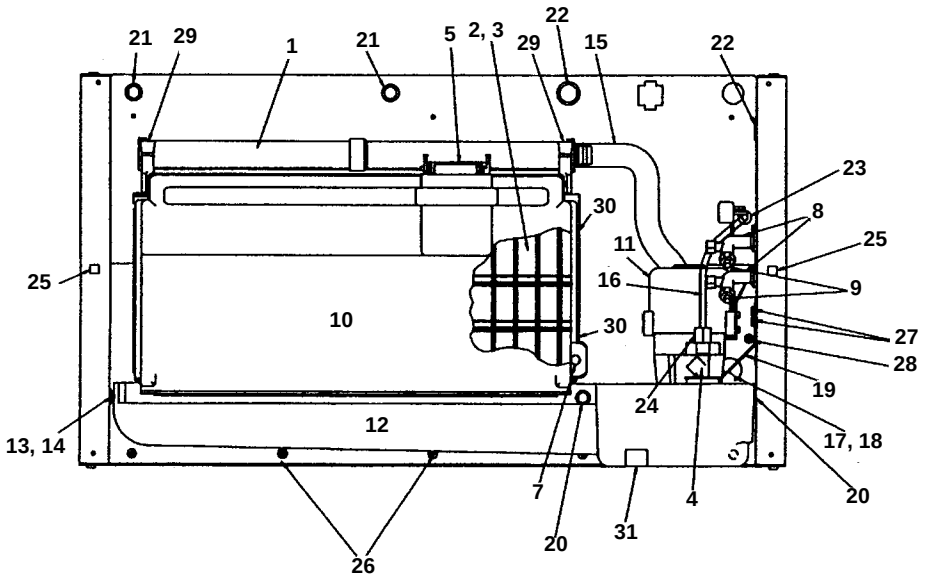

	DESCRIPTION	PART NO.
1	Distribution Tube Assembly	† 76-2498-3
2	Evaporator, Regular Cube	† 76-2585-9
3	Evaporator, Dice Cube	† 76-2584-9
3a	Evaporator, Half Dice	† 76-2658-9
4	Float Valve	† 83-6904-9
5	Ice Thickness Control	† 76-2781-3
6	Ice Thickness Control Adjustment Screw	† 50-1210-9
7	Magnetic Bin Switch	† 23-0148-3
8	Process Valve with Stem	† 83-7310-9
9	Stem Assembly only	No Longer Available
10	Water Curtain	40-0478-3
10a	Water Curtain Hanger	76-2776-3
10b	Water Curtain Magnet And Clip	† 76-2802-3
11	Water Pump	† 76-2306-3
12	Water Trough	† 76-2748-3
13	Water Trough Support	† 43-0201-9
14	Hex Nut, White Nylon	† 54-2945-9
15	Molded Tube, White	44-2096-3
16	Poly Tubing	44-2029-1
17	Reducing Tee	43-0057-3
18	Union Connector (White nylon)	83-9005-3
19	Bracket to Mount Float Bracket	† 76-2140-3
20	Push-in Screw Up to SN 951162096	† 50-1227-9
20a	Receptacle After SN 951162096	56-5085-3
20b	Wing-Head Stud After SN 951162096	56-5086-3
21	Bushing, .625"	† 25-0218-9
22	Bushing, .875"	† 25-0140-9
23	Bushing	† 25-0011-9
24	Compression Nut	† 56-5072-9
25	Cage Nut, #8-32	† 54-2910-9
26	Screw, #10-24 x 5/8"	† 52-0207-9
27	Screw, #10-24 x 1/2"	† 52-0206-9
28	Screw (To mount dump valve)	† 52-0205-9
29	Thumbscrew, #8-32 x 1/2"	† 50-0001-3
30	Screw for Mounting Evaporator	† 52-0218-9
31	Water Trough Support Clip Assembly	† 76-2704-3
32	Evaporator Gasket/Top Molding Assembly (Not shown)	76-2621-3

† Refer to Cross Reference Guide

B0200 COMMON PARTS

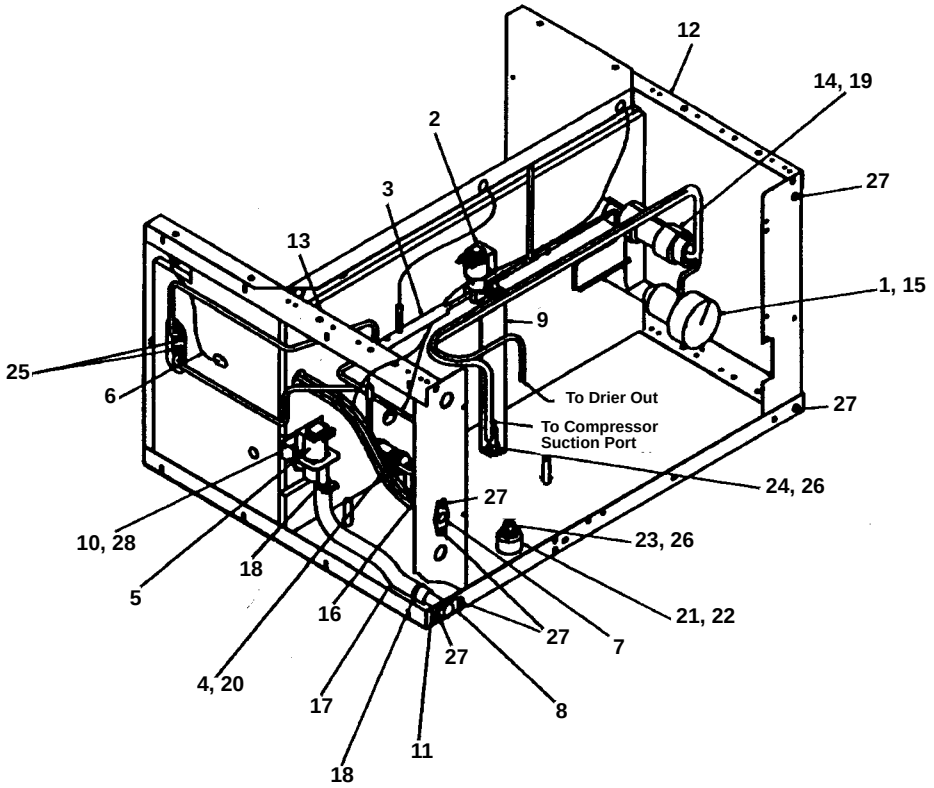

	DESCRIPTION	PART NO.
1	Expansion Valve	† 76-2583-3
2	Hot Gas Solenoid* 115V 60 Hz (Danfoss)	† 76-3001-1
3	Manifold/Strainer	83-1016-3
4	NTC Thermistor	23-5116-3
5	Dump Valve, 115V*	000001767
6	Water Pump Lead	† 20-7810-3
7	Adapter, Water Inlet	† 87-0609-3
8	Adapter, Water Outlet	17-0602-1
9	Bracket for Solenoid Support	No Longer Available
10	Bracket to Mount Water Dump Valve	626031-4
11	Drain Tube	11048-1
12	LH Corner Post Weldment	600926-1
13	RH Corner Post Weldment	600926-2
14	Neoprene Bulb Boot	40-8027-3
15	Neoprene TXV Boot	40-8026-3
16	Union	13-6096-1
17	Vinyl Tube	† 44-2038-3
18	Plastic Clamp	† 56-5070-9
19	Hex Head Wormdrive Clamp	† 56-5052-9
20	Worm Gear Clamp	56-5077-3
21	Rubber Grommet	† 85-0306-9
22	Sleeve	† 85-0394-9
23	Flatwasher 5/16	† 55-7309-9
24	Lockwasher 3/8 Split	† 55-4514-9
25	Hex Locknut - Palnut	† 54-7503-9
26	Hex Nut 3/8-16	† 54-3002-9
27	Screw, #10-24 x 1/2"	† 52-0206-9
28	Screw, #10-24 x 5/8"	† 52-0205-9

* See Page 8 for 230V Applications

† Refer to Cross Reference Guide

B0200 AIR-COOLED

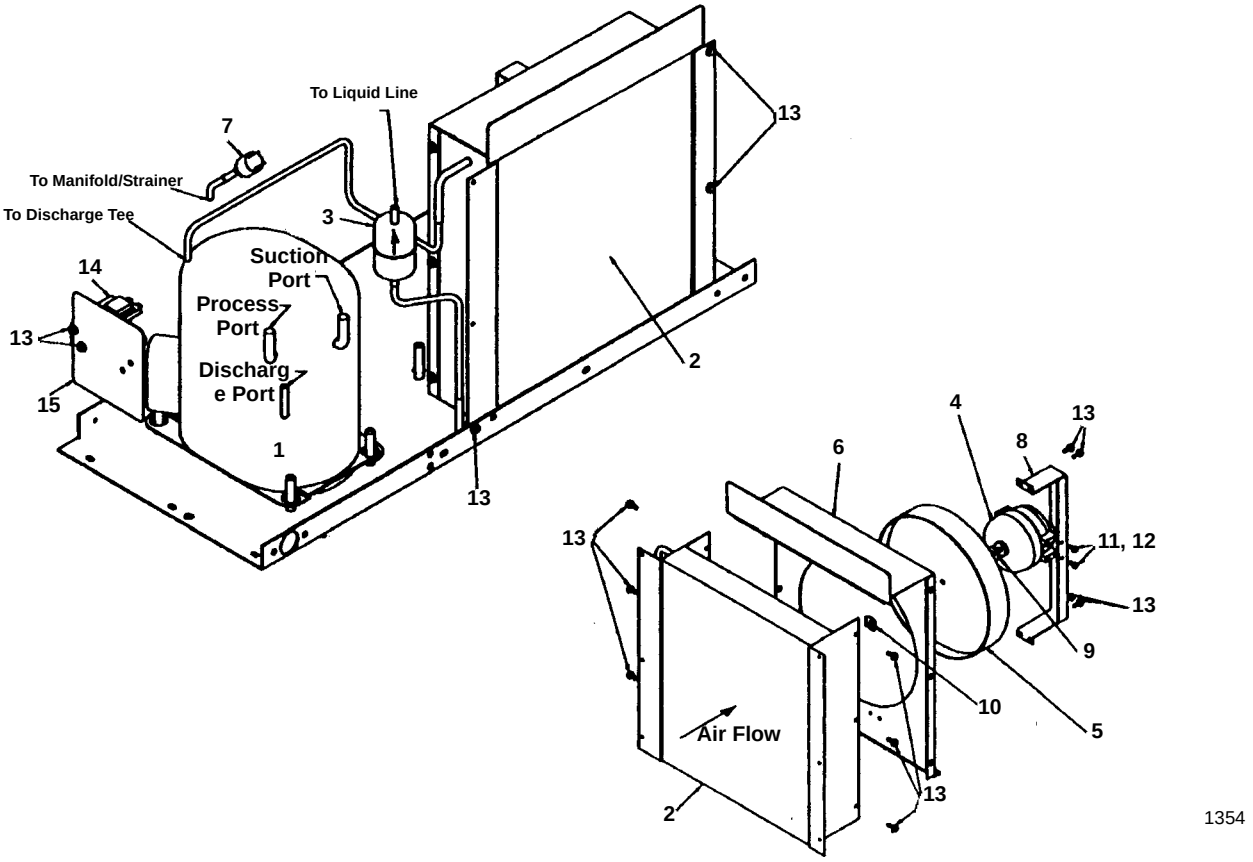

DESCRIPTION		PART NO.
1	Compressor Assembly, 115V 60 Hz*	† 76-2517-3
1a	Overload	† 85-0479-3
2	Air Condenser	88-5085-3
3	Drier	† 89-3025-9
4	Fan Motor*	† 24-1287-3
5	Fan Blade	24-1624-3
6	Fan Shroud	600944-1
7	Fan Cycling Control	† 20-0126-3
8	Bracket for Fan Motor	600810-1
9	Fiber Washer	† 55-7335-9
10	Speed Nut	† 54-7507-9
11	Flatwasher	† 55-0426-9
12	Screw, #8-36 x 7/16"	† 50-2559-9
13	Screw, #10-24 x 1/2"	† 52-0206-9
14	Dump Valve, 115V	000001767
15	Shield for Water Dump Solenoid	† 70-0062-3

* See Page 8 for 230V Applications

† Refer to Cross Reference Guide

B0200 WATER-COOLED

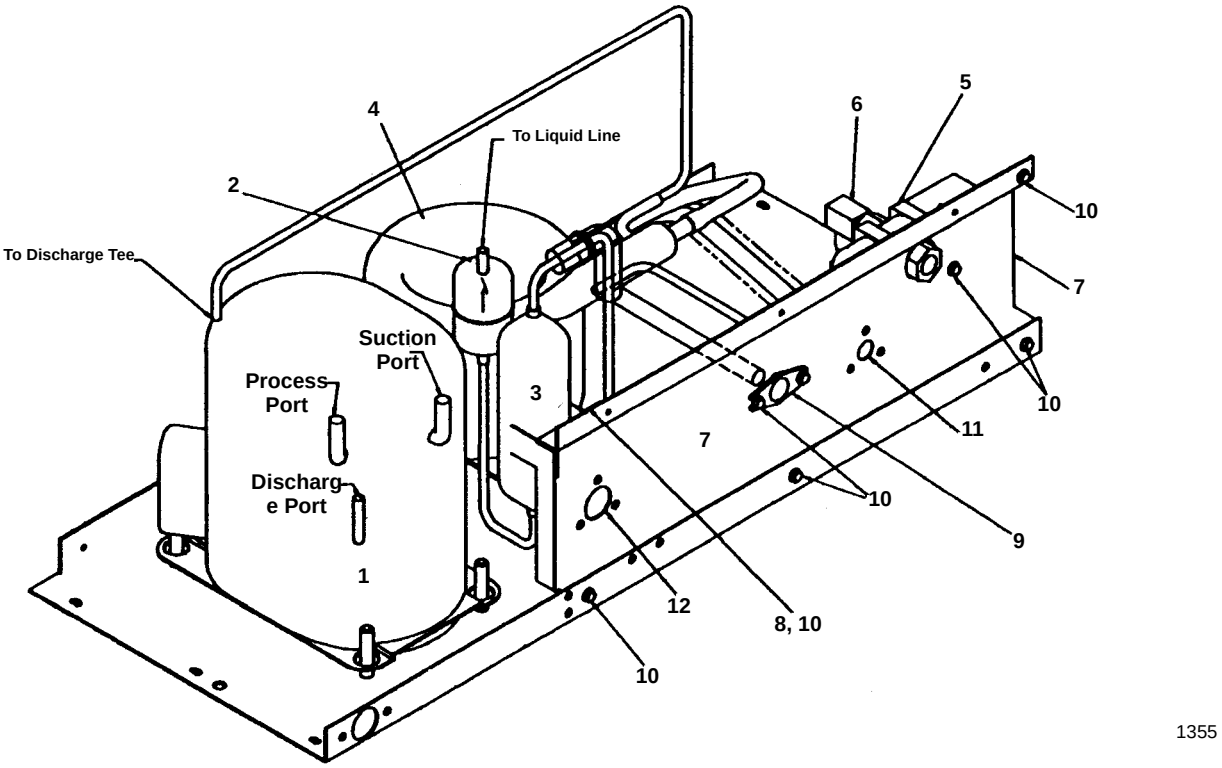

DESCRIPTION		PART NO.
1	Compressor Assembly, 115V 60 Hz*	† 76-2517-3
1a	Overload	† 85-0479-3
2	Drier	† 89-3025-9
3	Receiver	12-0003-1
4	Water Condenser	† 88-6531-3
5	Water Regulating Valve	† 83-7206-9
6	Elbow, 3/8 NPT x 1/2	83-0506-3
7	Coupling Mounting Panel	600057-1
8	Receiver Strap	600054-1
9	Adapter, Condenser Drain	87-0612-3
10	Screw, #10-24 x 1/2"	† 52-0206-9
11	Hole Plug, Black .625"	43-0264-3
12	Hole Plug, Black 1-1/16"	43-0192-3

* See Page 8 for 230V Applications

† Refer to Cross Reference Guide

B0200 PANELS

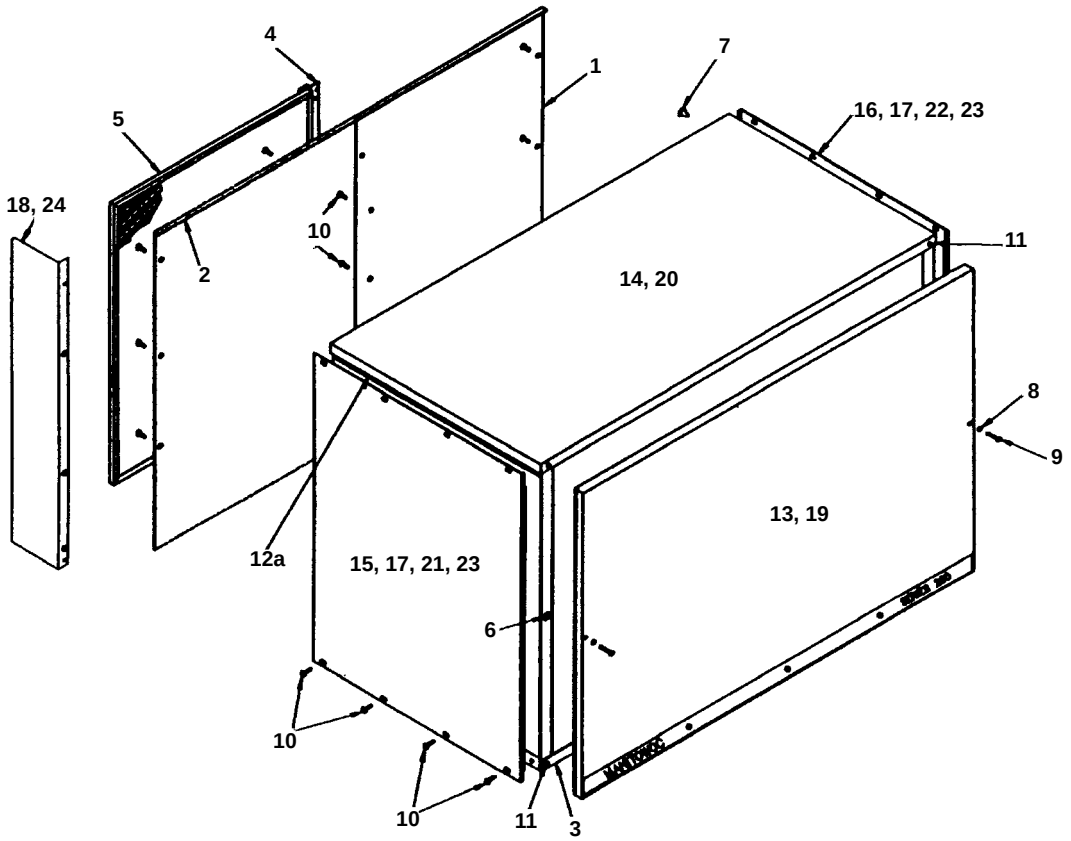

COMMON		PART NO.
1	Back Panel, Air-cooled	600945-1
2	Back Panel, Water-cooled	600946-1
3	Front Panel Support	† 658041-9
4	Bracket for Air Filter	† 76-2686-3
5	Air Filter	40-4012-3
6	Cage Nut #8-32	† 54-2910-9
7	Accordian Panel Clip	† 56-4820-9
8	“0” Ring	† 37-1819-9
8a	Washer	55-7338-3
9	Screw, #8-32 x 1.50"	† 50-2668-9
10	Screw, #10-24 x 1/2"	† 52-0206-9
11	Screw, #10-24 x 1/2"	† 52-0209-9
12	Washer, Flat	† 55-7338-9
12a	Extruded Tape	† 92-0250-9
FAWN		
13	Front Panel Assembly	76-2277-3
14	Top Cover	600068-1
15	LH Side Panel, Air-cooled	600937-1
16	RH Side Panel, Air-cooled	600938-1
17	RH-LH Panel, Water-cooled	600939-1
18	Air Baffle	600961-1
STAINLESS STEEL		
19	Front Panel Assembly	76-2278-3
20	Top Cover	600068-3
21	Side Panel LH, Air-cooled	600937-2
22	RH Side Panel, Air-cooled	600938-2
23	RH & LH Side Panel, Water-cooled	600939-2
24	Air Baffle	600961-2

† Refer to Cross Reference Guide

B0200 ELECTRICAL APPLICATIONS

All parts are the same as 115V Model with the following exceptions:

230V/50 Hz	**PART NO.**
Fuse for Control Board, 7 Amp	25-1100-3
Mini-fuse for Control Board, .1 Amp	25-1105-3
Compressor	No Longer Available
Overload	85-0470-3
Start Relay	No Longer Available
Start Capacitor	85-0372-3
Contactor	† 20-0659-9
Dump Valve, 208/230V	000001768
Fan Motor	† 24-1288-3
Water Pump	† 76-2601-3
Terminal Block	25-1103-3
Hot Gas Solenoid Valve 208/230V 50/60 Hz (Danfoss)	† 76-3007-1

230V/60 Hz	
Fuse for Control Board, 7 Amp	25-1100-3
Mini-fuse for Control Board, .125 Amp	† 25-1116-9
Compressor	No Longer Available
Overload	85-0469-3
Start Relay	85-0375-3
Start Capacitor	85-0372-3
Contactor	† 20-0659-9
Dump Valve, 208/230V	000001768
Fan Motor	† 24-1288-3
Water Pump	† 76-2601-3
Hot Gas Solenoid Valve 208/230V 50/60 Hz (Danfoss)	† 76-3007-1

† Refer to Cross Reference Guide