Ice Machine Parts List for Series i-600 Models

iD0602A	**iY0604A**
iD0603W	**iY0605W**
iD0692N	**iY0694N**
	JC0895

i600 CONTROL BOX

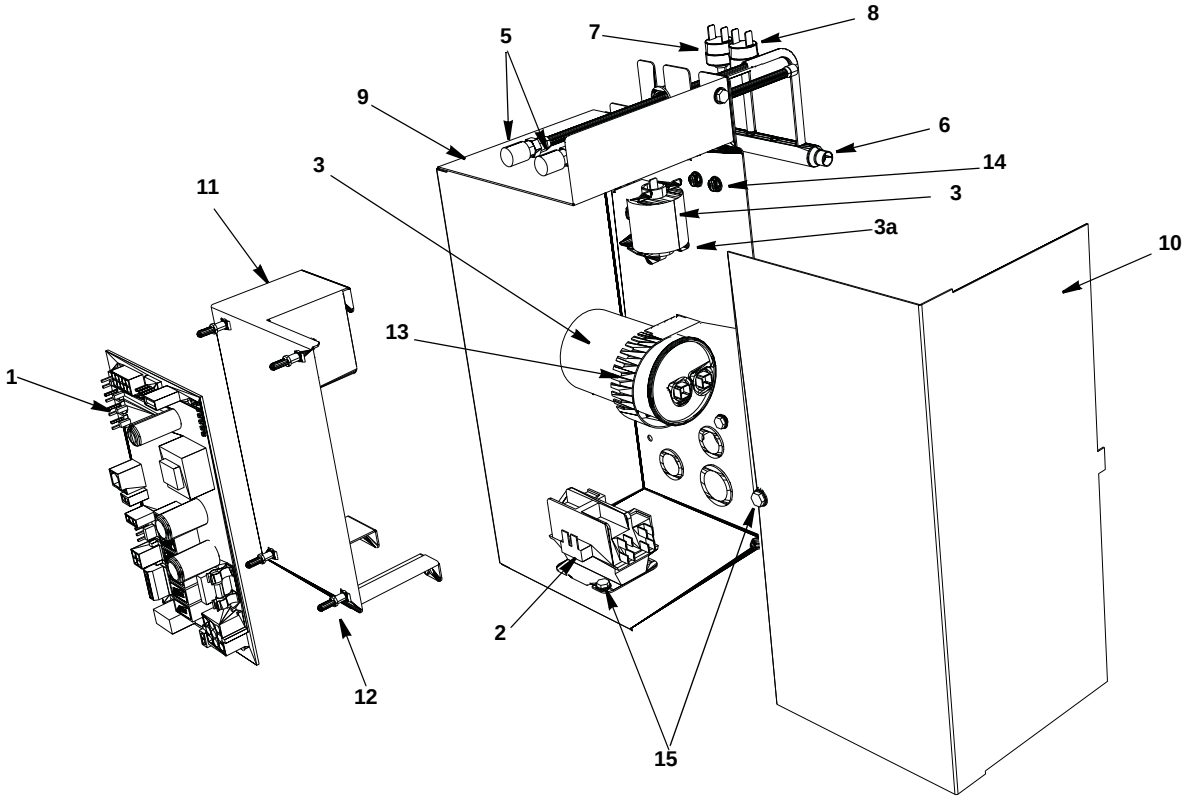

	DESCRIPTION	PART NO.
1	Control Board (for use with all voltages)	000008309
	a. 8 amp Ceramic Fuse – Mounted on Control Board	000009181
2	**Contactor**	
	a. 208-230V/60 Hz/1ph or 230V/50 Hz/1ph	20-0659-9
3	**PTCR Compressor Starter**	85-0499-3
	a. Bracket	85-0501-3
4	**Compressor Run Capacitor**	
	a. 208-230V/50-60 Hz/1ph	85-0393-3
5	Refrigeration Service Valve Assembly	83-7326-3
6	Manifold Strainer	82-5104-9
	a. Bracket	605857-1
7	High Pressure Cut-out (Auto Reset)	20-0124-3
8	Fan Cycling Control	† 20-0126-3
Miscellaneous – Brackets, Screws, etc.		
9	Control Box	000007563
10	Control Box Cover	000007569
11	Control Board Mounting Bracket	000007564
12	Control Board Mounting Supports	43-0225-3
13	Capacitor Mounting Strap	602495-3
14	Screws, #10-24 x .50 Ground	52-0216-9
	a. Star Washer	55-7320-9
15	Screw, #10-24 x .50	52-0206-9
16	Lockwashers	55-7320-9
17	Control Box Bushings	
	a. Large (1)	25-0001-9
	b. Small (4)	25-0140-9
18	**Control Box Wiring Harness** (Not shown)	
	a. 230/60/1	000007179
	b. 230/50/1	000007180
19	**Compressor Compartment Wiring Harness** (Not shown)	
	a. Air-cooled	000007185
	b. Water-cooled	000007177
	c. Remote Air-cooled	000007184

i600 EVAPORATOR COMPARTMENT - COMMON COMPONENTS

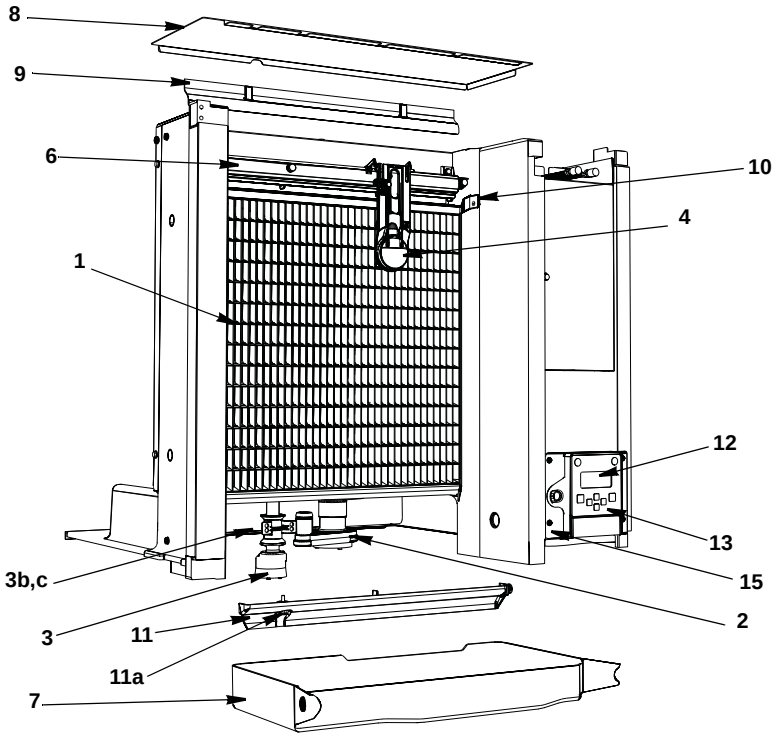

DESCRIPTION		PART NO.
1	**Evaporator Assembly**	
	a. Dice Cube	76-0283-9
	b. Half Dice Cube	76-0284-9
2	**Water Pump**	
	a. 230V/60 Hz 1/3PH	20-0739-9
	b. 230/50/1	82-5210-9
3	**Water Level Probe**	000007052
	a. Wire, control box to probe (Not shown)	000007099
	b. Holder	000007053
	c. Screw (Mount Water Level Probe Holder)	52-0209-9
4	Ice Thickness Control Probe	000008660
5	Water Curtain (Not shown)	40-1097-9
6	Water Distribution Tube Assembly	76-0219-3
	a. O-Rings (Back of Distribution Assembly)	50-0464-9
7	Water Trough	40-0360-9
8	Foodzone Seal Panel	000007613
9	Evaporator Top Filler Panel	40-0846-9
	a. Stainless Steel Clamp	606333-9
	b. Clamp Screw	52-0209-9
10	Evaporator Top Frame Assembly	76-0220-3
11	Water Diverter	76-0221-3
	a. Thumbscrew	53-0512-3
12	LCD Display	000006728
13	Touch Pad with Housing	000007926
14	LCD Wiring Harness (Not shown)	000007737
15	Touch Pad/Housing Mounting Bracket	000006697
16	Ice Deflector (Not shown)	000006700
Miscellaneous – Brackets, Screws, etc.		
17	Screw, (Water Distribution Tube Mounting) Each	50-0479-9
	a. O-Ring	50-0462-9
18	Screw, #12-16 x .687 Used to Mount Evaporator (Each)	50-0461-9
19	Water Pump Base O-Ring	50-0465-9
20	Water Pump Outlet O-Ring	50-0467-9

i600 REFRIGERATION COMPARTMENT – COMMON PARTS

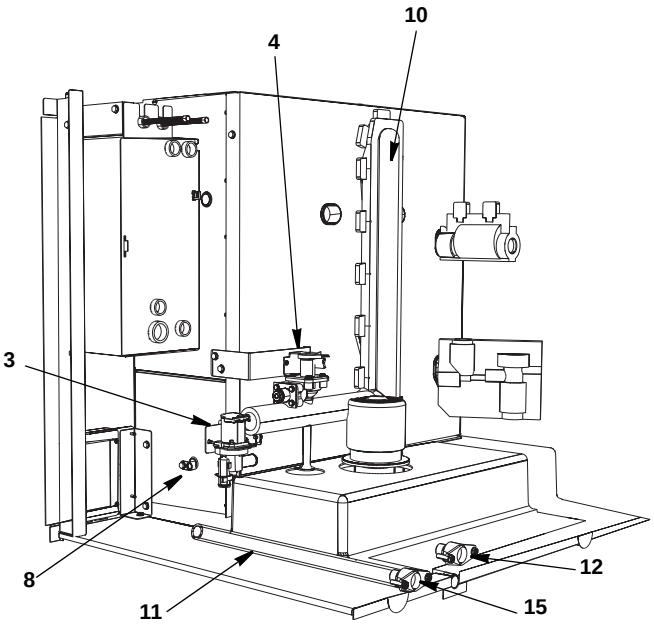

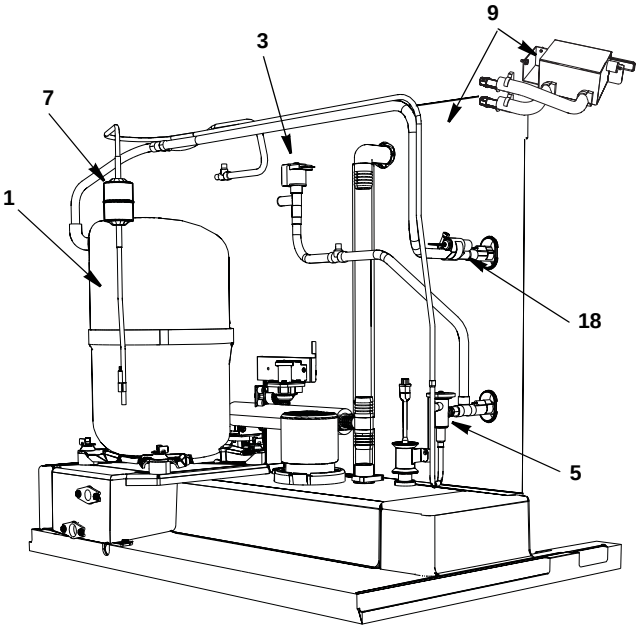

DESCRIPTION		PART NO.
1	**Compressor**	
	a. 208-230V/60 Hz/1 Ph	76-0291-3
	b. 220V/50 Hz/1 Ph	76-0292-3
	c. Molded Plug	20-0623-3
2	**Water Dump Valve** (with bracket)	
	a. 208-230V/50-60 Hz	000001768
	b. Mounting Bracket	605845-9
	c. Dump Valve Tubing 3.25 inches	44-2038-3
3	**Harvest Valve**	
	a. Harvest Valve Including 208/230V 50/60 Hz Electrical Coil	000007019
	b. Harvest Valve 208/230V Coil Only Danfoss	000005157
4	**Water Inlet Valve**	
	a. Water Inlet Valve Including 208-230V/50-60 Hz Coil	000007966
	b. Water Inlet Valve Bracket	000007594
5	**Expansion Valve**	
	a. Air-cooled	76-0158-3
	a. Water-cooled & Remote	76-0019-3
	a. Expansion Valve Body Insulation Boot	40-0036-3
	b. Expansion Valve Bulb Insulation Boot	40-0720-3
6	**Thermistors with Spring Clips**	000008310
7	**Drier**	
	a. Air & Water-cooled	89-3025-9
	b. Remote	89-3027-9
8	**Magnetic Bin Switch**	000007710
	a. Wiring Harness	000007410
9	**LuminIce**	K00424
	a. LuminIce Bulb	K00425
	b. LuminIce Wiring Harness	000007409
	c. Bulkhead Fitting 2.25”	000007990
	d. Bulkhead Fitting 2.75”	000008269
10	**Insulated Tube** (vinyl tubing from distribution tube to water pump & dump valve)	000003405
	a. Clamp 0.859/0.989 ID	56-5060-3
	b. Clamp 0.799/0.899 ID	56-5070-3
11	**Vinyl Tubing** 0.625 ID (dump valve to drain adapter)	000001382
	a. Insulation	603883-1
	b. Clamp	56-5070-9
Miscellaneous – Brackets, Screws, etc.		
12	Water Inlet Wing Adapter	87-0609-3
	a. Adapter Plastic Fitting	13-6096-1
13	Water Inlet Valve Tubing	40-1043-9
14	Connector Water Inlet Valve	13-6098-9
15	Water Drain Wing Adapter	87-0613-3
16	Compressor Mounting	
	a. Base	606170-9
	b. Rubber Grommet	† 85-0306-9
	c. Sleeve	85-0394-9
	d. Bolt	50-0481-9
	e. Nut	50-0482-9
17	Clamp, Expansion Valve Bulb	56-5052-9
18	Copper Bulb Strap	30-0050-3
19	Screw, #10-24 x .50	52-0206-9

i600 Refrigeration Compartment – Air-Cooled

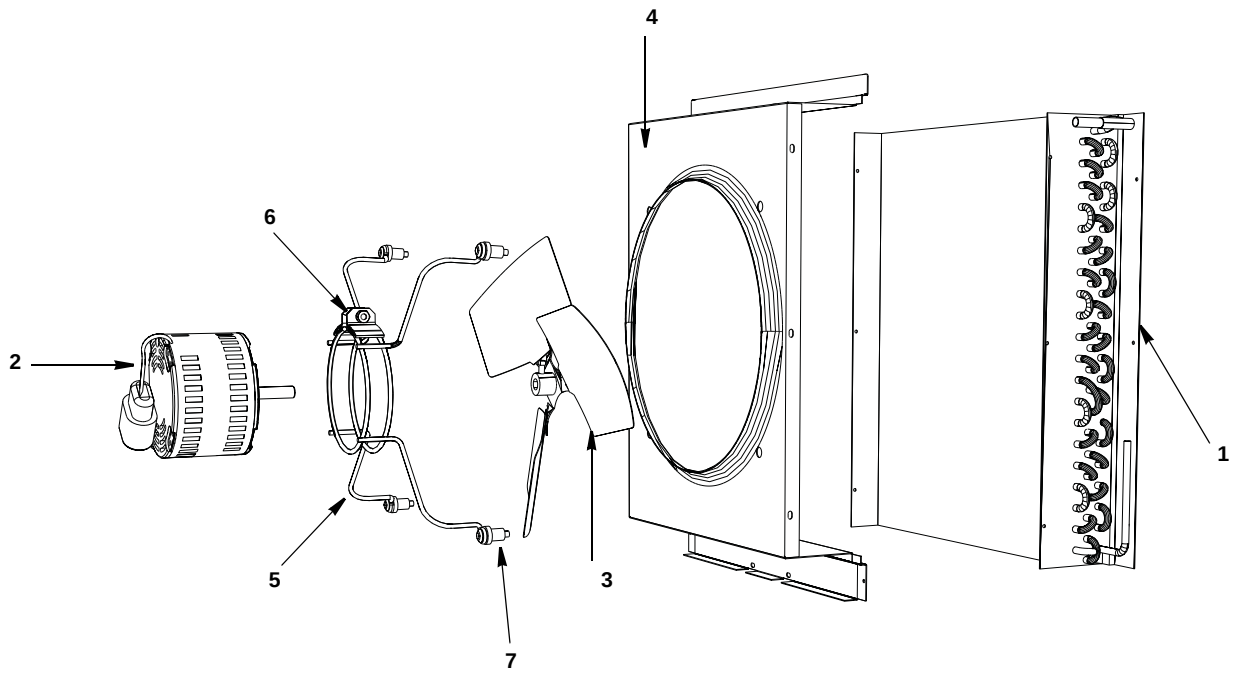

DESCRIPTION	PART NO.
1 Air Condenser	82-5294-9
2 Fan Motor	
a. 208-230V/60 Hz or 230V/50 Hz	000002315
3 Fan Blade	24-1617-3
Miscellaneous – Brackets, Screws, etc.	
4 Fan Shroud	000002485
5 Fan Motor Bracket	606186-9
6 Fan Motor Mounting Screw	† 50-3358-9
a. Fan Motor Mounting Lockwasher	† 55-4510-9
b. Fan Motor Mounting Hexnut	† 54-2952-9
7 Fan Bracket Mounting	
a. Screw	50-3238-9
b. Lockwasher	† 55-4510-9
c. Flatwasher	† 55-7305-9
d. Rubber Wellnut	† 54-2955-9
8 Screw, #10-24 x .50	† 52-0206-9

† Refer to Cross Reference Guide

i600 REFRIGERATION COMPARTMENT – WATER-COOLED

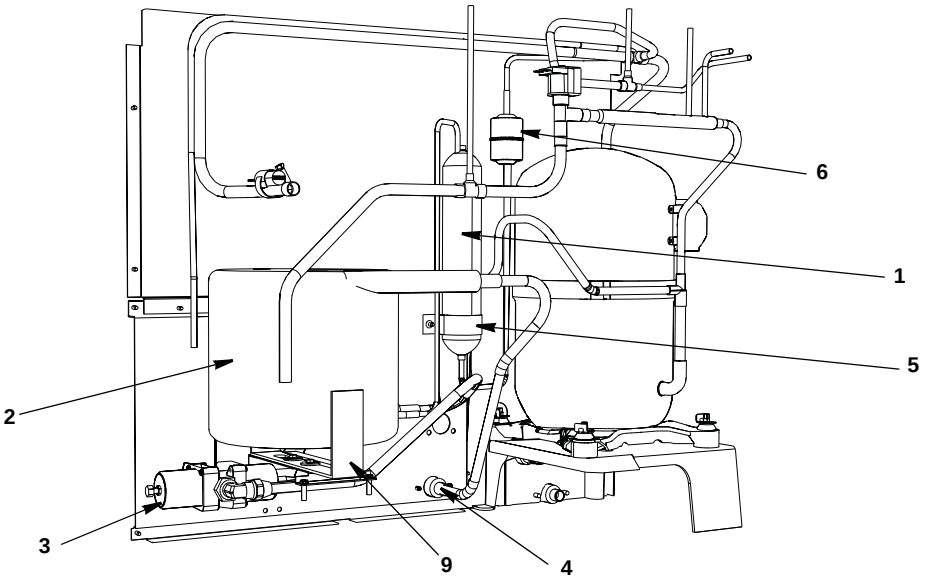

DESCRIPTION		PART NO.
1	Receiver	12-0003-1
2	Water-cooled Condenser	82-5303-9
3	Water Regulating Valve	82-5282-9
	a. Bracket	000007695
4	Condenser Water Drain Female Wing Adapter	87-0608-3
Miscellaneous – Brackets, Screws, etc.		
5	Receiver Strap	600054-1
6	Elbow 3/8 MF x 3/8 MPT	50-0215-9
7	Screw, #10-24 x .50	52-0206-3
8	Washer	55-7341-9
9	Base, Water Condenser/Receiver	605865-9

† Refer to Cross Reference Guide

i600 REFRIGERATION COMPARTMENT – REMOTE

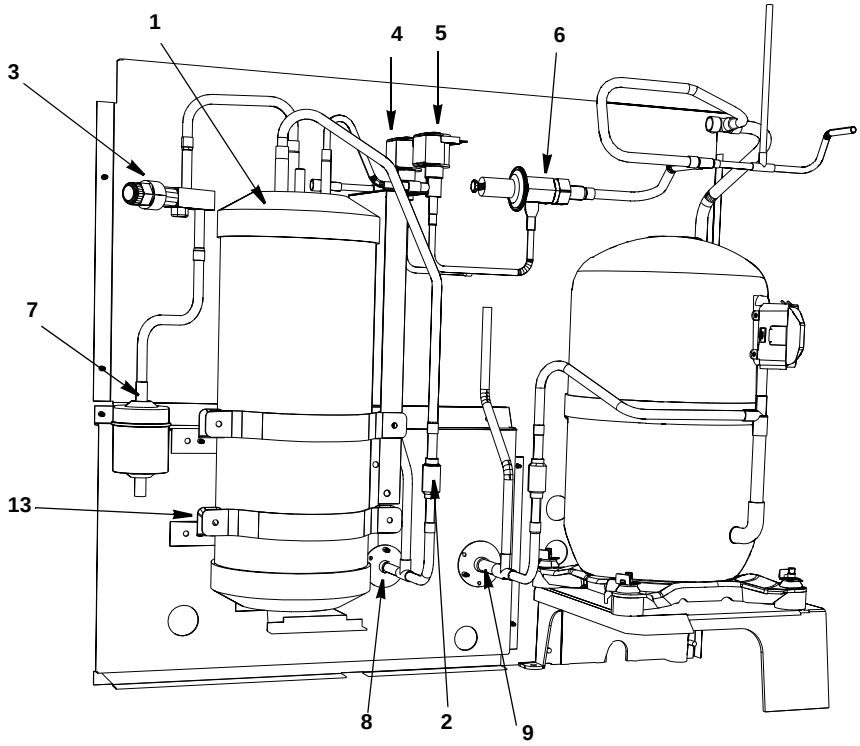

DESCRIPTION	PART NO.
1 Receiver	82-5058-3
2 Magni-Check Valve	† 83-7314-9
3 Refrigeration Service Valve	† 83-7316-9
a. Cap for Refrigeration Service Valve	56-5075-9
4 **Harvest Pressure Regulating Solenoid (HPR) Valve**	
a. HPR Valve Including 230V 50-60 Hz Electrical Coil (Danfoss)	000007034
b. HPR Valve 230V 50-60 Hz Coil Only Danfoss	000005157
5 **Liquid Line Solenoid (LLS) Valve**	
a. LLS Valve Including 230V 50-60 Hz Electrical Coil (Danfoss)	000007032
b. LLS Valve 230V 50-60 Hz Coil Only Danfoss	000005157
6 Harvest Pressure Regulating Valve (HPR)	† 83-6779-3
7 Drier	89-3027-9
8 Coupling – Male, 5/8-18	† 83-6034-3
9 Coupling – Male, 1-1/6-12	† 83-6035-3
Miscellaneous – Brackets, Screws, etc.	
10 Coupling Mounting Flange for 5/8-18	83-6005-3
11 Coupling Mounting Flange for 1-1/16-12	83-6006-3
12 Drier Support Bracket	56-5061-9
13 Receiver Mounting	
a. Bracket (between receiver and panel)	600056-1
b. Strap	630721-4
c. Support Bracket	000006721
d. Base	605865-9
e. Screw, #10-24 x .50	† 52-0206-9

† Refer to Cross Reference Guide

i600 PANELS

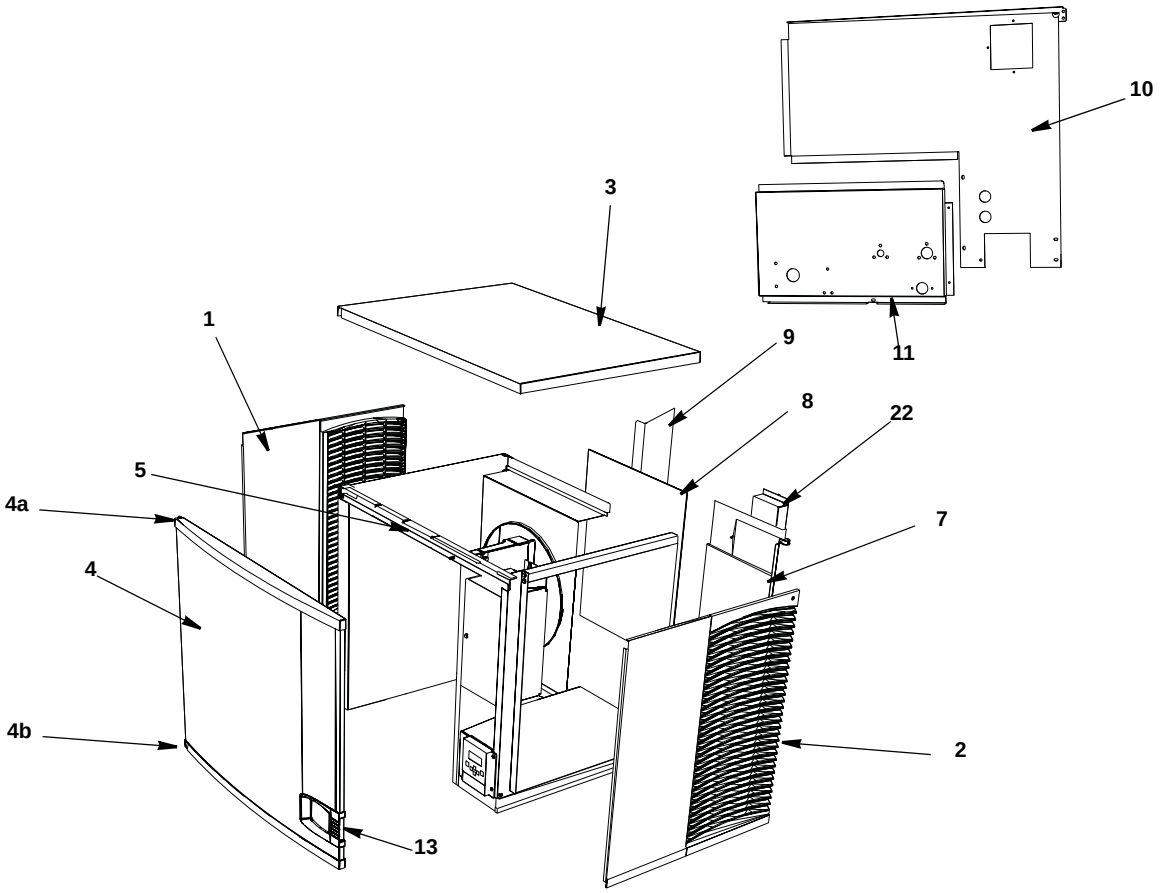

DESCRIPTION		PART NO.
1	Left Side Panel	000005217
2	Right Side Panel	000005215
3	Top Cover	000006699
4	Front Panel Assembly	000006577
	a. Top Endcap	000006538
	b. Bottom Endcap	000006539
5	Front Top Support	000006730
	Mounting Screw Left Side 8-32 x 1	50-0537-9
	Mounting Screw Right Side 10-24 x.50	50-0509-9
6	Back Coupling Panel, Drain/Water Connection (Compressor Base)	606170-9
Air-Cooled Back Panels		
7	Back Panel with Electrical Connection Box, Air-cooled Models	606595-9
8	Air Filter	30-0568-9
9	Air Baffle Assembly	000007314
Water-Cooled & Remote Air-Cooled Back Panels		
10	Back Panel with Electrical Connection Box,	607207-1
11	Back Coupling Panel, Water-Cooled/Remote Connections	606173-9
12	Drain Fitting	87-0608-3
Miscellaneous – Brackets, Screws, etc.		
13	Front Panel LCD Frame	000006564
14	Right/Left Door Screw	50-0489-9
15	Bottom Door Frame	76-0226-3
	a. Mounting Screw Left Side 8-32 x 1 PHIL	50-0537-9
	b. Mounting Screw Right Side 10/24 x .50 PHIL	52-0209-9
16	Door Catch Bracket (RHD)	606236-9
	a. Mounting Screw 8-32 x .50 Phil	50-2624-9
17	Left Door Pivot Leaf Hinge (Top or Bottom)	30-0557-9
	a. Mounting Screw 8-32 x 1 PHIL	50-0537-9
18	Left Top Channel	606864-9
19	Right Top Channel	606257-9
20	Left Corner Post	606293-9
21	Right Corner Post	606292-9
22	Electrical Connection Box Cover	Included in Back Panel Assembly
23	**Electrical Box on Rear of Ice Machine**	
	a. Box	Included in Back Panel Assembly
	b. Terminal Block 3 Pole	20-0614-3
	c. Groundscrew #10-24 x .50	52-0216-9

JC0895 REMOTE CONDENSER

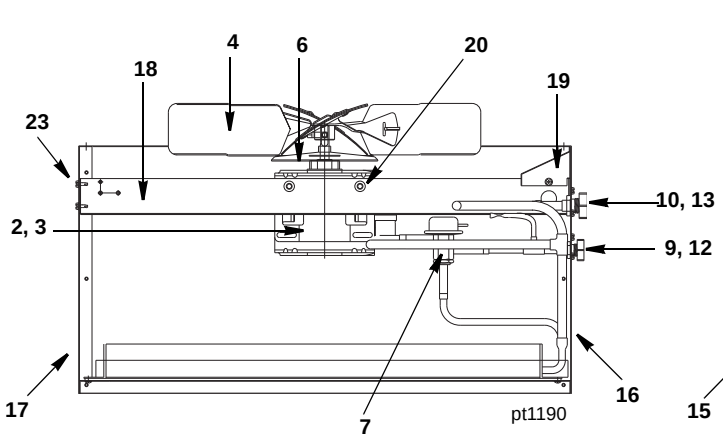

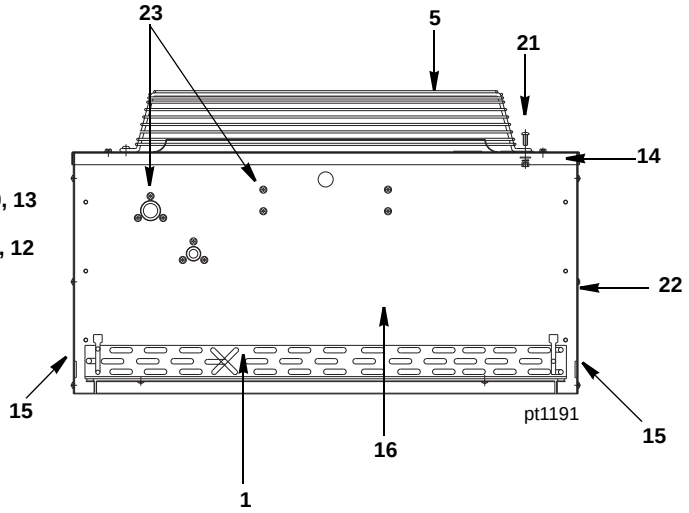

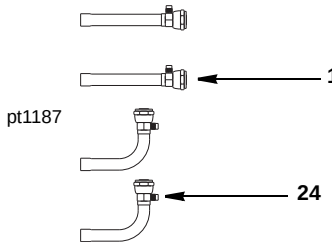

DESCRIPTION		PART NO.
1	Air Condenser	† 88-5062-9
2	Fan Motor (208-230V 50/60 Hz/1 Ph)	† 76-2941-3
3	Fan Motor Run Capacitor (Emerson)	85-0458-3
3	Fan Motor Run Capacitor (Magnatec)	No Longer Available
4	Fan Blade	24-1611-3
5	Fan Guard	34-0064-3
6	Rain Slinger	24-1505-3
7	Head Pressure Control	000004070
8	Terminal Block	000008040
9	Coupling – Male, 5/8-18	† 83-6034-3
10	Coupling – Male, 1-1/6-12	† 83-6035-3
11	Female Line Set Coupling Kit (Sold as Finished Goods Sales Kit)	Sales K0129
Miscellaneous – Brackets, Screws, etc.		
12	Coupling Mounting Flange (for 5/8-18)	83-6005-3
13	Coupling Mounting Flange (for 1-1/16-12)	83-6006-3
14	Top Cover	† 601775-1
15	Panel – Side	† 601774-1
16	Panel – Rear	† 601773-1
17	Panel – Front	† 601772-1
18	Fan Motor Mounting Bracket	† 601768-1
19	Electrical Box Cover	† 601776-1
20	**Fan Motor Mounting Screw** (5/16-18 x 5/8)	† 50-3565-9
	a. Fan Motor Mounting Flatwasher	† 55-7309-9
	b. Fan Motor Mounting Lockwasher	† 55-7313-9
	c. Fan Motor Mounting Hexnut	54-2975-9
21	**Fan Guard Mounting Screw** (1/4-20 x 5/8)	† 50-3345-9
	a. Fan Guard Mounting Flatwasher	† 55-7304-9
	b. Fan Guard Mounting Lockwasher	† 55-4511-9
	c. Fan Guard Mounting Hexnut	† 54-2952-9
22	**Panel/Condenser Mounting Screw** (#8 x 1/2)	† 51-2153-9
	a. Panel/Condenser Mounting Lockwasher	† 55-4459-9
23	Screw (#10-24 x 1/2)	† 52-0206-9
24	Valve Cores (used in linesets)	76-2684-3
25	Legs (Not shown) (4 Req.)	† 601769-1

† Refer to Cross Reference Guide