PS536 Gas and Electric
Europe
ENGLISH/German/
French/Spanish

Middleby Marshall®

P/N 46525
Rev. B • V1 • 9/01

ENGLISH page 1
DEUTSCH Seite 35
FRANÇAIS page 69
ESPAÑOL página 103

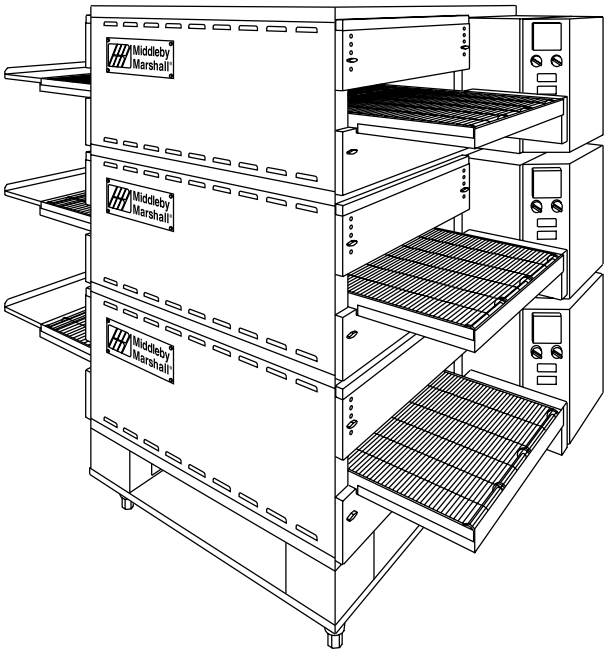

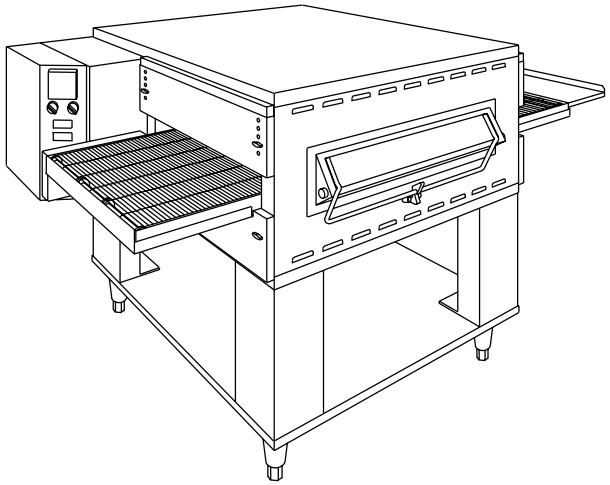

PS536 Gas and Electric Ovens

Models:

- PS536

Combinations:

- Single Oven
- Double Oven (Two-Stack)
- Triple Oven (Three-Stack)

OWNER'S OPERATING AND INSTALLATION MANUAL

for European export ovens

	Single Oven	*Double Oven*	*Triple Oven*
Rated Heat Input, Gas Ovens	Natural Gas 14.6kW-hr. Propane 13.2 kW-hr.	Natural Gas 2x14.6kW-hr. Propane 2x13.2 kW-hr.	Natural Gas 3x14.6kW-hr. Propane 3x13.2 kW-hr.
Rated Heat Input, Electric Ovens	17kW	2x17kW	3x17kW
Heating Zones	1 controlled heat zone	2 controlled heat zones	3 controlled heat zones

Middleby Cooking Systems Group • 1400 Toastmaster Drive • Elgin, IL 60120 • (847)741-3300 • FAX (847)741-4406

ENGLISH

NOTICE:

This Owner's Operating and Installation Manual should be given to the user. The operator of the oven should be familiar with the functions and operation of the oven.

This manual must be kept in a prominent, easily reachable location near the oven.

Gas ovens are designed for use with EITHER natural gas OR liquid propane gas, as specified on the serial plate. Where permitted by local and national codes, the oven can be converted from natural gas to propane operation, or from propane to natural gas operation. This conversion is described in the *Installation* section of this Manual. The conversion requires the installation of the appropriate Middleby Marshall Gas Conversion Kit.

It is suggested to obtain a service contract with a Middleby Marshall Authorized Service Agent.

WARNING

POST, IN A PROMINENT LOCATION, THE EMERGENCY TELEPHONE NUMBER OF YOUR LOCAL GAS SUPPLIER AND INSTRUCTIONS TO BE FOLLOWED IN THE EVENT YOU SMELL GAS.

Instructions to be followed in the event the user smells gas shall be obtained by consulting the local gas supplier. If the smell of gas is detected, immediately call the emergency phone number of your local Gas Company. They will have personnel and provisions available to correct the problem.

FOR YOUR SAFETY
Do not store or use gasoline or other flammable vapors or liquids in the vicinity of this or any other appliance.

WARNING:

Improper installation, adjustment, alteration, service or maintenance can cause property damage, injury or death. Read the installation, operating and maintenance instructions thoroughly before installing or servicing this equipment.

IMPORTANT
An electrical wiring diagram for the oven is located inside the machinery compartment.

IMPORTANT
It is the customer's responsibility to report any concealed or non-concealed damage to the freight company. Retain all shipping materials until it is certain that the equipment has not suffered concealed shipping damage.

NOTICE: CONTACT YOUR MIDDLEBY MARSHALL AUTHORIZED SERVICE AGENT TO PERFORM MAINTENANCE AND REPAIRS. AN AUTHORIZED SERVICE AGENCY DIRECTORY IS SUPPLIED WITH YOUR OVEN.

NOTICE: Using any parts other than genuine Middleby Marshall factory manufactured parts relieves the manufacturer of all warranty and liability.

NOTICE: Middleby Marshall (Manufacturer) reserves the right to change specifications at any time.

NOTICE: The equipment warranty is not valid unless the oven is installed, started and demonstrated under the supervision of a factory certified installer.

Retain This Manual For Future Reference

Middleby Cooking Systems Group • 1400 Toastmaster Drive • Elgin, IL 60120 • USA • (847)741-3300 • FAX (847)741-4406
24-Hour Service Hotline: 1-(800)-238-8444
www.middleby.com

TABLE OF CONTENTS

ENGLISH

SECTION 1 - DESCRIPTION

ENGLISH

I. OVEN USES

PS536 Ovens can be used to bake and/or cook a wide variety of food products, such as pizza, pizza-type products, cookies, sandwiches and others.

II. OVEN COMPONENTS - see Figure 1-1.

A. Window (on ovens so equipped): Allows the user to see and access food products inside the baking chamber.

B. Conveyor Exit Tray: Prevents food products from falling off the end of the moving conveyor.

C. Eyebrows (on ovens so equipped): Can be adjusted to various heights to prevent heat loss into the environment.

D. End Plugs: Allow access to the oven's interior.

E. Control Panel: Location of the operating controls for the oven. Refer to Section 3, Operation, for details.

F. Machinery Compartment Access Panel: Allows access to the oven's interior components. No user-servicable parts are located inside the machinery compartment.

G. Serial Plate: Provides specifications for the oven that affect installation and operation. Refer to Section 2, Installation, for details.

H. Conveyor Drive Motor: Moves the conveyor.

I. Crumb Pans: Catch crumbs and other material that drop through the conveyor belt. One crumb pan is located underneath each end of the conveyor.

J. Conveyor: Moves the food product through the oven.

Not Shown:

K. Gas Burner (gas ovens) or Heating Elements (electric ovens): Heat air, which is then projected to the air fingers by the blowers.

L. Blowers: Fans that project hot air from the burner or heating elements to the air fingers.

M. Air Fingers: Project streams of hot air onto the food product.

Fig. 1-1 - Oven Components

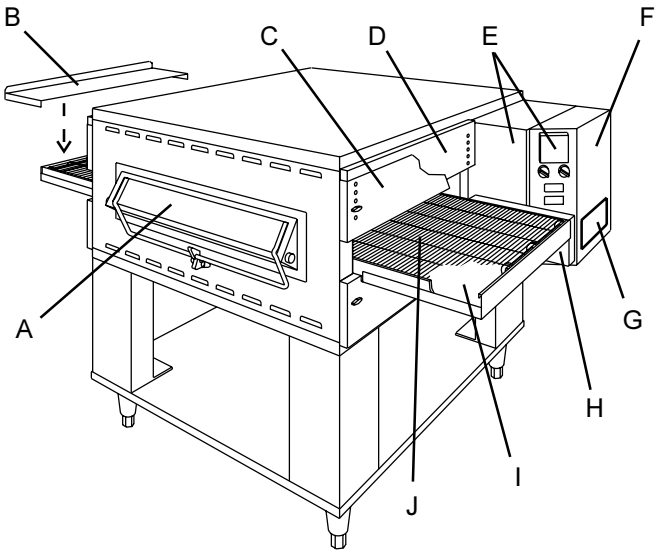

III. OVEN SPECIFICATIONS

Table 1-1: Dimensions

		Ovens with 1422mm-long Type 1 conveyor (custom)*	*Ovens with 1524mm-long Type 1 conveyor* (standard)*	*Ovens with 1524mm-long Type 2 conveyor* (standard)*	*Ovens with 1930mm-long Type 2 conveyor* (custom)*
Overall Height:	single oven w/standard 446mm legs	1105mm	1105mm	1105mm	--
	single oven w/custom 597mm legs	--	1256mm	1256mm	--
	double oven w/standard 446mm legs	1549mm	1549mm	1549mm	--
	double oven w/custom 521mm legs	--	1624mm	1624mm	1624mm
	triple oven w/standard 152mm legs	1702mm	1702mm	1702mm	--
Overall Depth:	without optional front window	1010mm	1010mm	1010mm	1010mm
	with optional front window	1092mm	1092mm	1092mm	1092mm
Overall Length:	without exit tray installed	1422mm	1524mm	1537mm	1943mm
	with exit tray installed	--	1734mm	1734mm	2140mm
Baking Chamber Length		< - - - - - - - - - - - - - - - - - - 914mm - - - - - - - - - - - - - - - - - - >			
Conveyor Width:	Single Belt	< - - - - - - - - - - - - - - - - - - 508mm - - - - - - - - - - - - - - - - - - >			
	Split Belt	< - - - - - - - - - - - - - - - - - - 2 x 241mm - - - - - - - - - - - - - - - - - - >			
Conveyor Length		1422mm	1524mm	1524mm	1930mm
Recommended Minimum Clearances:					
	Rear of oven to wall	< - - - - - - - - - - - - - - - - - - 76mm - - - - - - - - - - - - - - - - - - >			
	Control end of conveyor to wall	< - - - - - - - - - - - - - - - - - - 457mm - - - - - - - - - - - - - - - - - - >			
	Non-control end of conveyor to wall	< - - - - - - - - - - - - - - - - - - 76mm - - - - - - - - - - - - - - - - - - >			

*** Refer to Figures 2-9 and 2-10 in the *Installation* section for illustrations of Type 1 and Type 2 conveyors.**

Table 1-2: General specifications (per oven cavity)

Weight		182kg
Rated Heat Input:	Gas Ovens, Natural Gas	14.6kW-hr.
	Gas Ovens, Propane	13.2kW-hr.
	Electric Ovens	17kW
Operating Temperature		93-316°C
Warmup Time		25 minutes

Table 1-3: Electrical specifications for electric ovens (per oven cavity)

Main Blower Voltage	*Control Circuit Voltage*	*Phase*	*Freq.*	*Current Draw*	*kW Rating*	*Poles*	*Wires*
230V	120V conv. speed control, drive motor, contactor, & temp. control; all others 230V	3 Ph	50 Hz	25A	17.0 kW at 380V	4 Pole	5 Wire (3 hot, 1 neutral, 1 ground)

IMPORTANT: Additional electrical information is provided on the oven's serial plate, and on the wiring diagram inside the machinery compartment.

CAUTION: The current draw shown in the chart above is an average value for normal operation. The initial amperage draw on oven startup may exceed the listed value.

Table 1-4: Electrical specifications for gas ovens (per oven cavity)

Main Blower Voltage	*Control Circuit Voltage*	*Phase*	*Freq*	*Current draw (avg.) **	*Poles*	*Wires*
220-230V	120V conveyor speed controller (with transformer); all other control circuits 230V	1 Ph	50Hz	4.0-4.6A *	2 Pole	3 Wire (1 hot, 1 neutral, 1 ground)

IMPORTANT: Additional electrical information is provided on the oven's serial plate, and on the wiring diagram inside the machinery compartment.

CAUTION: The current draw shown in the chart above is an average value for normal operation. The initial amperage draw on oven startup may exceed the listed value.

Table 1-5: Gas orifice and pressure specifications (per oven cavity)

		Supply (Inlet) Pressure							
Gas Type	*Main Orifice dia.*	*IT,PT,ES,SE, UK,CH,IT,AT, DK,FI,GB* I_{2H}	*NL* I_{2L}	*DE* I_{2E}	*BE,FR* I_{2E+}	*SE,CH,AT,DK, FI,DE,NL* $I_{3B/P}$	*BE,IE,IT,PT, ES,GB* I_{3+}	*Orifice (Manifold) Pressure*	*Rated Heat Input*
G20	2.3749 mm	20 mbar	--	20 mbar	20 mbar	--	--	11.21 mbar	14.6 kW-hr.
G25	2.3749 mm	--	25 mbar	--	--	--	--	16.19 mbar	14.6 kW-hr.
G30	2.3749 mm	--	--	--	--	29 or 50 mbar	28, 30, 37, or 50 mbar	26.15 mbar	13.2 kW-hr.

SECTION 2 - INSTALLATION

ENGLISH

WARNING - For gas ovens, after any conversions, readjustments, or service work on the oven:

- **Perform a gas leak test.**
- **Test for correct air supply.**
- **Test for proper combustion and gas supply.**
- **Check that the ventilation system is in operation.**

WARNING

For electric ovens, after any conversions, readjustments, or service work on the oven, check that the ventilation system (if so equipped) is in operation.

WARNING

Keep the appliance area free and clear of combustibles.

WARNING

The oven must be installed on an even (level) non-flammable flooring and any adjacent walls must be non-flammable. Recommended minimum clearances are specified in the *Description* section of this Manual.

WARNING

Do not obstruct the flow of combustion and ventilation air to and from your oven. There must be no obstructions around or underneath the oven. Constructional changes to the area where the oven is installed shall not affect the air supply to the oven.

CAUTION

For additional installation information, contact your local Authorized Service Agent.

NOTE

There must be adequate clearance between the oven and combustible construction. Clearance must also be provided for servicing and for proper operation.

NOTE

An electrical wiring diagram for the oven is located inside the machinery compartment.

NOTE

Four casters are provided to allow the oven to be more easily moved to the installation location. These casters are intended to simplify pre-installation movement only, and are NOT suitable for use as part of the oven installation. During the installation procedure, the casters MUST be removed, so that the oven can be supported by the supplied 152mm adjustable legs.

NOTE

All aspects of the oven installation, including placement, utility connections, and ventilation requirements, must conform with any applicable local, national, or international codes. These codes supercede the requirements and guidelines provided in this manual.

Figure 2-1 - Installation Kit

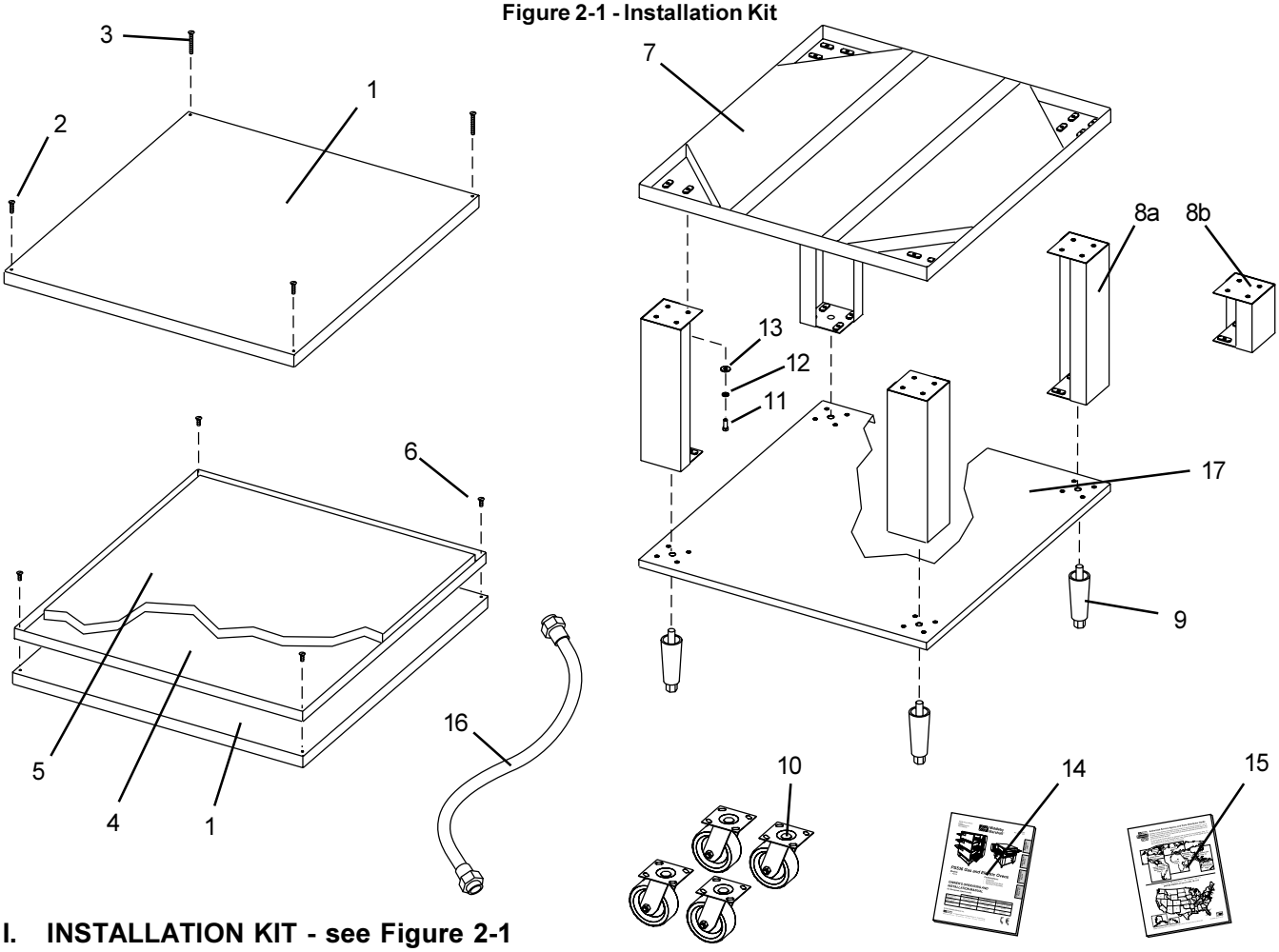

I. INSTALLATION KIT - see Figure 2-1

Item	Qty. Single Oven	Qty. Double Oven	Qty. Triple Oven	Part No.	Description
1	1	2	3	42882	Top panel
2	2	2	2	220352	Screw, pan head #10 x 1" (top panel - front)
3	2	2	2	3A80A8801	Screw, pan head #10 x 2" (top panel - rear)
4	--	1	2	44837	Stacking panel
5	--	1	2	44918	Insulation, stacking panel, pre-cut
6	--	4	8	4111A8815	Screw, hex head #10-32 x 1/2" (stacking panels)
7	1	1	1	42893	Base pad
8a	4	4	--	42890	445mm leg extension (standard), for single and double ovens
8b	4	--	--	45329	597mm leg extension (custom), for single ovens
8c	4	4	--	45360	521mm leg extension (custom), for single and double ovens
8b	--	--	4	44799	152mm leg extension (standard), for triple ovens
9	4	4	4	22450-0028	Leg, adjustable, 152mm
10	4	4	4	22290-0010	Caster, with flat plate (no brake) ***NOTE:*** *These casters are provided to allow the oven to be more easily moved to the installation location, and are NOT suitable for use as part of the oven installation. Refer to the notice on the preceding page.*
11	32	32	32	220373	Hex bolt, 3/8"-16 x 1"
12	32	32	32	21416-0001	Flat washer, 3/8"
13	32	32	32	21422-0001	Lockwasher, 3/8"
14	1	1	1	46525	*Owner's Operating Manual,* PS536 Gas and Electric Ovens (European Export models), English/German/French/Spanish
15	1	1	1	1002040	*Middleby Marshall Authorized Service Agency Listing*
16	1	2	3	22361-0001	Gas hose (gas ovens only)
Optional components (available separately):					
17	1	1	1	46393	Lower shelf

ENGLISH

II. VENTILATION SYSTEM

IMPORTANT

Where national or local codes require the installation of fire suppression equipment or other supplementary equipment, DO NOT mount the equipment directly to the oven.

MOUNTING SUCH EQUIPMENT ON THE OVEN MAY:

- ***VOID AGENCY CERTIFICATIONS***
- ***RESTRICT SERVICE ACCESS***
- ***LEAD TO INCREASED SERVICE EXPENSES FOR THE OWNER***

A. Requirements

CAUTION

Gas oven installations REQUIRE a mechanically driven ventilation system with electrical exhaust air sensing control.

A mechanically driven ventilation system is STRONGLY RECOMMENDED for electric oven installations.

PROPER VENTILATION OF THE OVEN IS THE RESPONSIBILITY OF THE OWNER.

B. Recommendations

NOTE THAT THE HOOD DIMENSIONS SHOWN IN FIGURE 2-2 ARE RECOMMENDATIONS ONLY. LOCAL, NATIONAL AND INTERNATIONAL CODES MUST BE FOLLOWED WHEN INSTALLING THE VENTILATION SYSTEM. ANY APPLICABLE CODES SUPERSEDE THE RECOMMENDATIONS SHOWN IN THIS MANUAL.

The rate of air flow exhausted through the ventilation system may vary depending on the oven configuration and hood design. Consult the hood manufacturer or ventilation engineer for these specifications.

To avoid a negative pressure condition in the kitchen area, return air must be brought back to replenish the air that was exhausted. A negative pressure in the kitchen can cause heat-related problems to the oven components as if there were no ventilation at all. The best method of supplying return air is through the heating, ventilation and air conditioning (HVAC) system. Through the HVAC system, the air can be temperature-controlled for summer and winter. Return air can also be brought in directly from outside the building, but detrimental effects can result from extreme seasonal hot and cold temperatures from the outdoors.

NOTE: *Return air from the mechanically driven system must not blow at the opening of the baking chamber. Poor oven baking performance will result.*

C. Other ventilation concerns

- Special locations, conditions, or problems may require the services of a ventilation engineer or specialist.
- Inadequate ventilation can inhibit oven performance.
- It is recommended that the ventilation system and duct work be checked at prevailing intervals as specified by the hood manufacturer and/or HVAC engineer or specialist.

Fig. 2-2 - Ventilation System

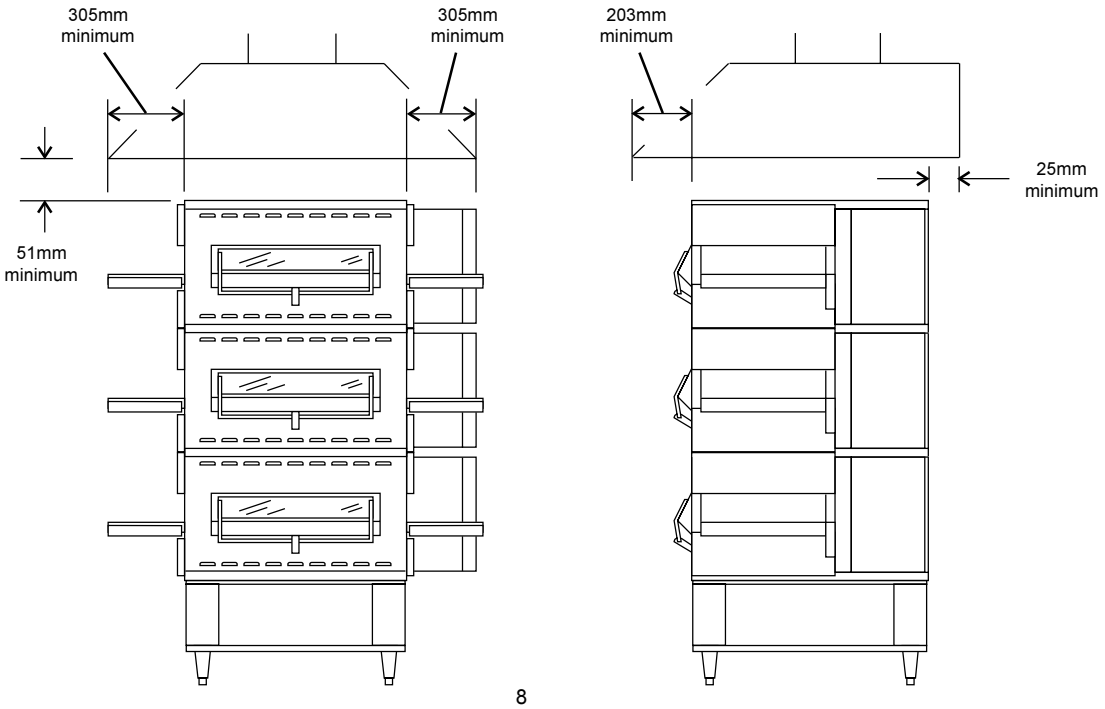

ENGLISH

III. ASSEMBLY

A. Base Pad Assembly

1. Install the four leg extensions onto the base pad using the 3/8"-16x1" screws, 3/8" flat washers, and 3/8" lockwashers supplied in the Base Pad Kit. See Figure 2-3. Check that the finished sides of each leg extension face OUTWARDS.
2. If desired, position the optional lower shelf in place as shown in Figure 2-3. Check that the lip on the shelf faces DOWN. The shelf is available separately, and is NOT included with the Installation Kit.
3. The Installation Kit includes four casters AND four 152mm adjustable legs. The casters are provided to allow the oven to be more easily moved to the installation location, and are NOT suitable for use as part of the oven installation. Refer to the notice at the beginning of this Section.
   - If the oven is already at the installation location, install one 152mm adjustable leg into the center hole on the bottom of each leg extension, as shown in Figure 2-4.
   - If it is necessary to move the oven to the installation location, TEMPORARILY install the casters using the remaining 3/8"-16x1" screws, 3/8" flat washers, and 3/8" lockwashers. Move the oven to its final location, and remove the casters. Then, install the 152mm adjustable legs as described in the previous step. The threaded studs on the adjustable legs extend through the lower shelf and into the leg extensions. This holds the lower shelf firmly in place.
4. Install the lower oven cavity onto the base pad. See Figure 2-4.
5. For single ovens ONLY, install the top panel using the screws included in the base pad kit, as shown in Figure 2-5. Then, skip ahead to Part C, Conveyor Installation.

   For double or triple ovens, continue on to Part B, Stacking. Note that the top panel should NOT be installed for double and triple ovens until after stacking the oven cavities.

Figure 2-3 - Leg extension and casters installation

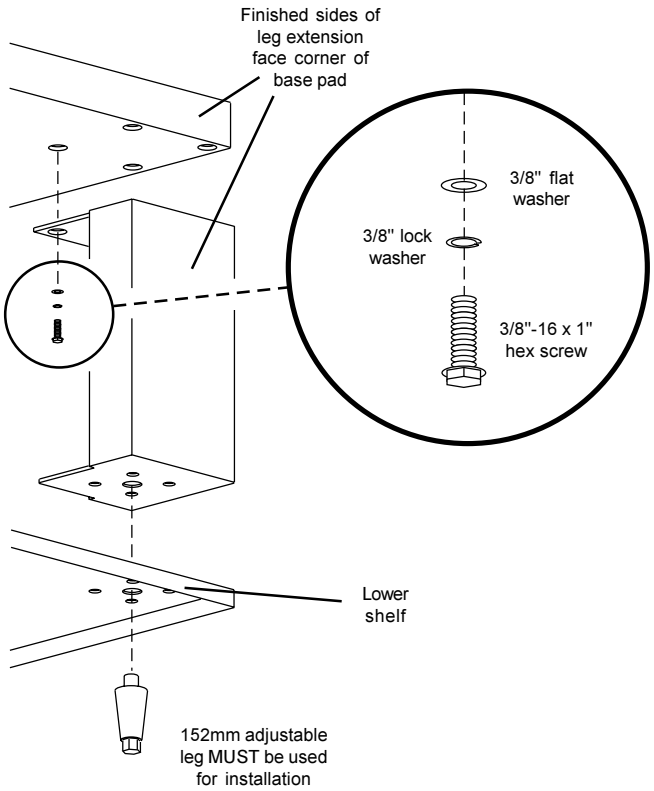

Figure 2-4 - Base pad installation

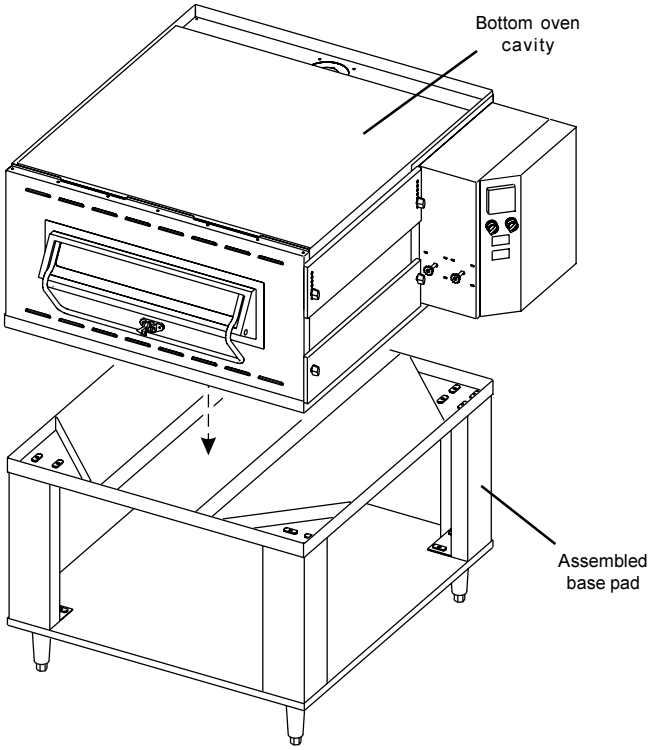

Figure 2-5 - Top panel installation

NOTE: DO NOT install top panel onto double or triple ovens until AFTER stacking the oven cavities. See Part B, Stacking.

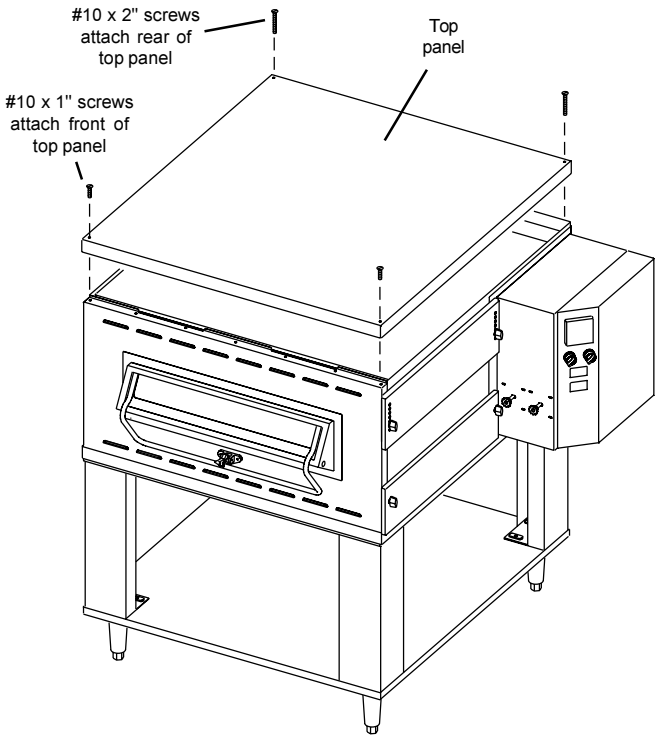

ENGLISH

B. Stacking

For single ovens, skip ahead to Part C, Conveyor Installation.

IMPORTANT

Middleby Marshall STRONGLY RECOMMENDS that PS536 oven cavities be stacked using the following:

- PS500 Series Stacking Lift Kit, P/N 30580
- PS536 Stacking Hardware Kit, P/N XXXXX

Contact your Middleby Marshall Authorized Service Agent for complete stacking instructions.

1. Assemble the stacking spacer(s) as shown in Figure 2-6. One spacer assembly is supplied for a double oven, while two are supplied for a triple oven.
2. Place one of the assembled spacers on top of the lower oven cavity, making sure that the insulation faces up.
3. Stack an oven cavity on top of the spacer. Check that all four sides of the spacer overlap the base of the oven, and that the oven is level and firmly seated. See Figure 2-7.
4. For triple ovens, repeat Steps 2 and 3 to install the top oven cavity.
5. Install the top panel using the screws included in the base pad kit, as shown in Figure 2-8.

Figure 2-6 - Assembling the stacking spacers

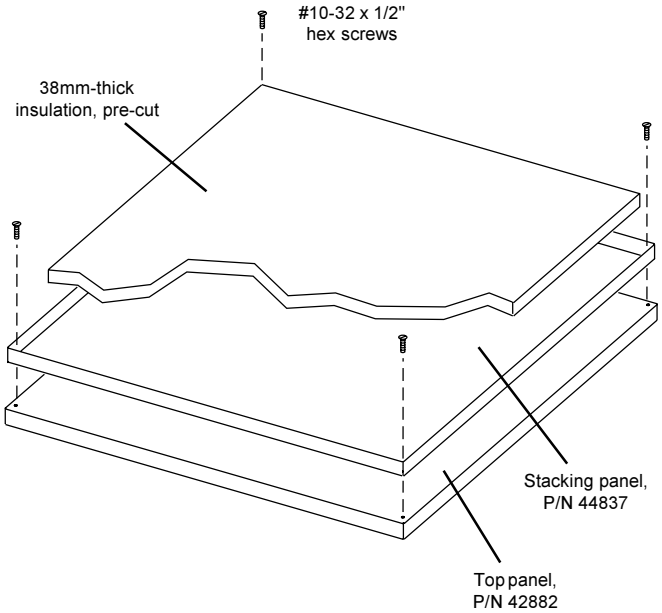

Figure 2-7 - Stacking

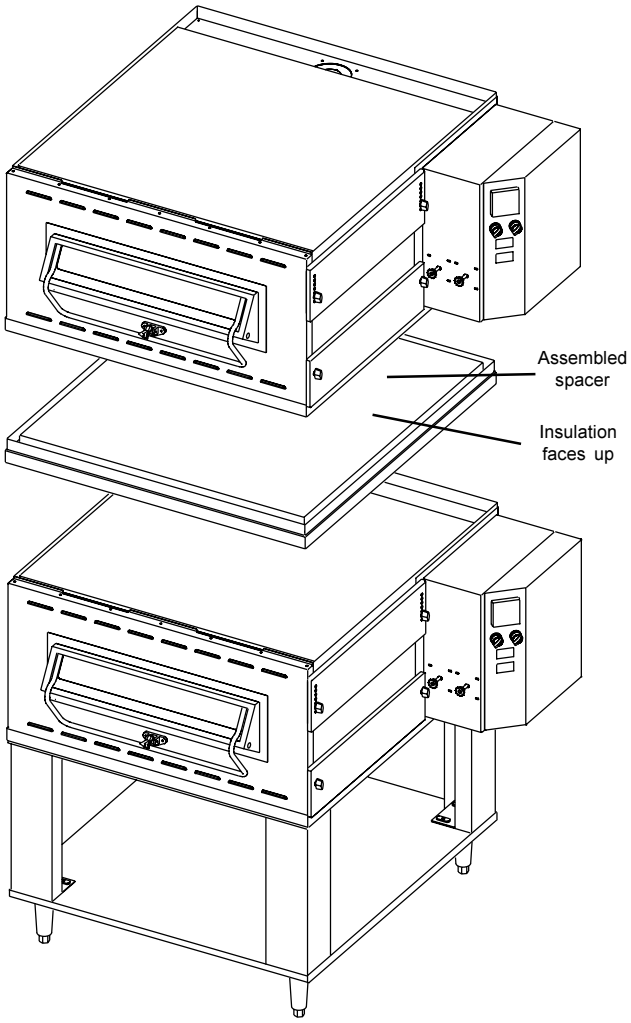

Figure 2-8 - Top panel installation

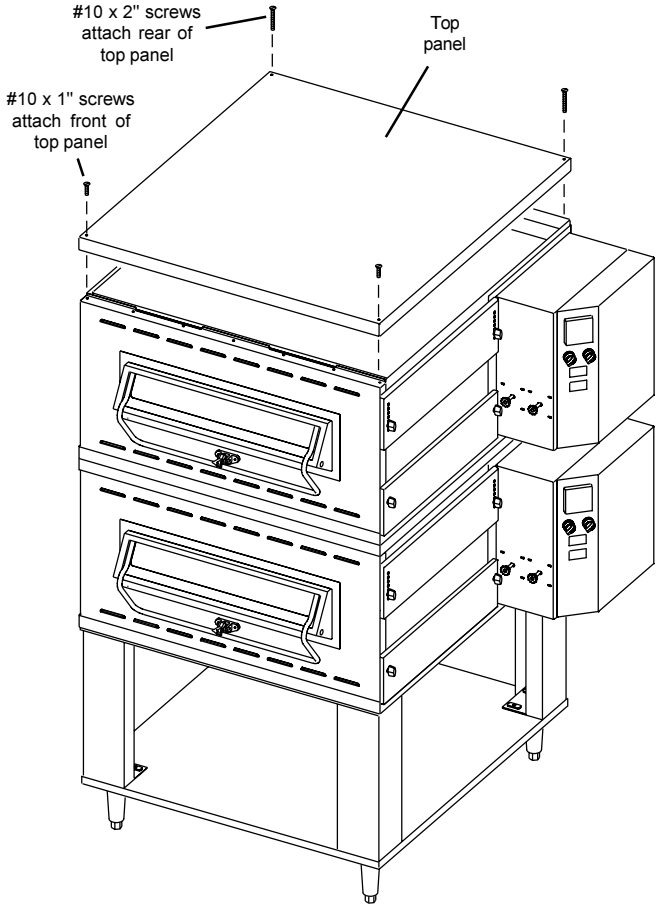

C. Conveyor Installation

PS536 ovens may be equipped with either of two different conveyor designs. Both designs are available in single belt and split belt configurations. Refer to Figures 2-9 and 2-10 to determine which conveyor was shipped with your oven.

- If your oven uses the Type 1 Conveyor, continue on to Step 1 in this section, "Type 1 Conveyor Installation."
- If your oven uses the Type 2 Conveyor, skip ahead to Step 2 in this section, "Type 2 Conveyor Installation."

Figure 2-9 - Identifying the Type 1 conveyor

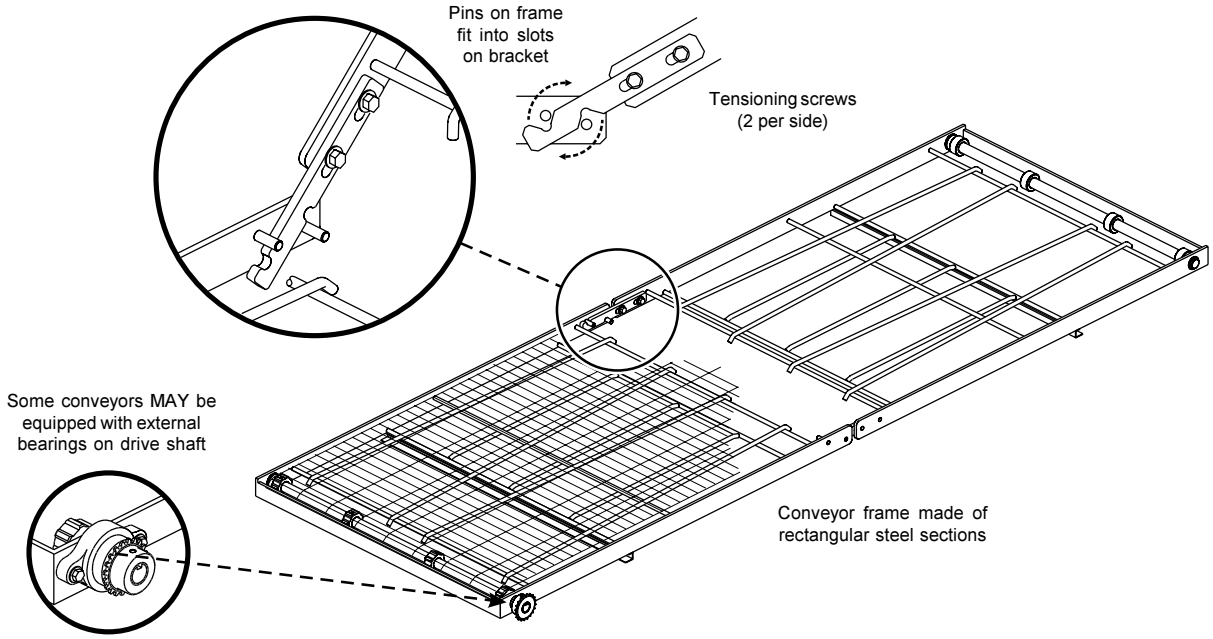

Figure 2-10 - Identifying the Type 2 conveyor

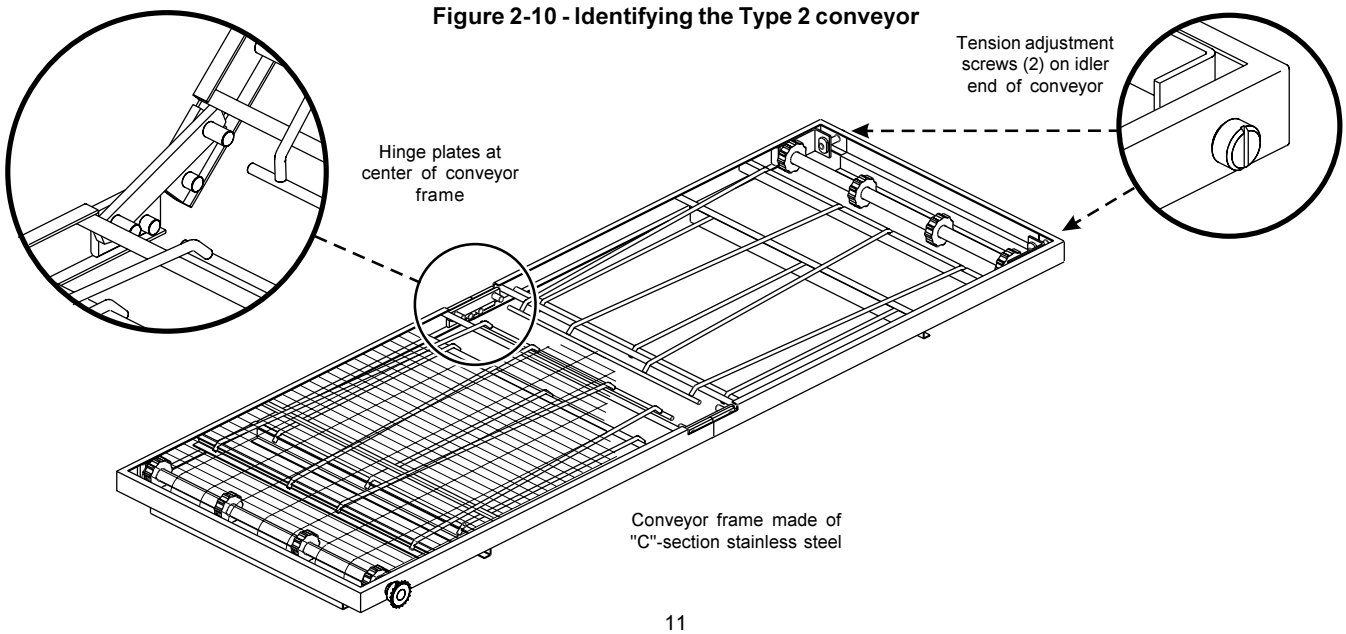

ENGLISH

1. Type 1 Conveyor Installation

a. Unfold the conveyor frame so that it lies flat on the floor. As you unfold the frame, check that the locator pins shown in Figure 2-11 lock into the slots on the bracket.

b. Refer to Figure 2-11. Note the locations of the four tensioning screws (2 per side) in the slotted holes on the brackets. Loosen these screws to allow the conveyor to be properly tensioned.

c. Lift the conveyor belt away from the frame, as shown in Figure 2-11, to check the belt tension. The belt should lift between 25-50mm.

If it is necessary to adjust the belt tension, gently push the two conveyor frame sections closer together, or further apart, as required. Then, re-check the tension of the conveyor belt. Repeat this step as necessary until the proper belt tension is achieved.

d. When the belt tension is correctly adjusted, tighten the two tensioning screws on each side of the conveyor frame. This fastens the two frame sections together at the correct belt tension.

e. If it is necessary to add or remove conveyor links to achieve the correct tension, OR if it is necessary to reverse the conveyor belt for correct orientation, the belt will need to be removed from the conveyor frame. If this is necessary, perform the following procedure:

- Remove the master links using long-nose pliers. Then, roll up the belt along the length of the conveyor frame.
- Add or remove belt links as necessary to achieve the correct belt tension.
- Replace the belt on the conveyor frame. Check that the conveyor belt links are oriented as shown in Figure 2-12, and that the smooth side of the conveyor belt faces UP.

f. Connect the inside master links. Check that the links are oriented as shown in Figure 2-12.

g. Connect the outside master links. Note that the outside master links each have an open hook on one side. This hook aligns with the hooks along the sides of the other conveyor links. See Figure 2-12.

Figure 2-11 - Assembling and tensioning the conveyor

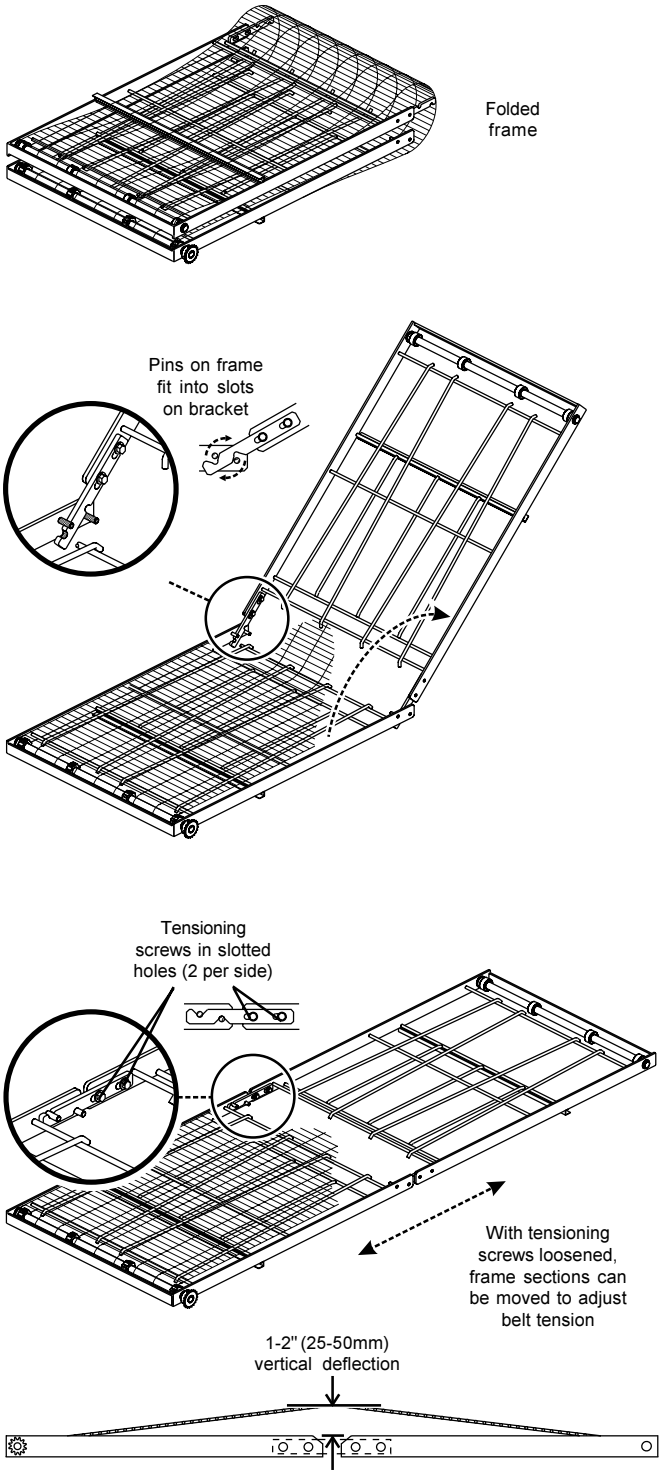

Figure 2-12 - Conveyor and master link orientation

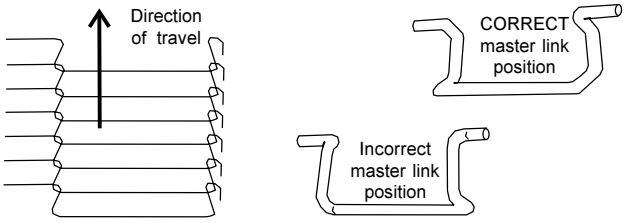

h. Lift the conveyor and position it in the oven. The conveyor can only be installed from the end of the oven with the drive motor.

i. Continue moving the conveyor into the oven until the conveyor frame is positioned properly. The inside supports for the crumb trays should rest firmly against the lower end plugs, as shown in Figure 2-13.

j. When the conveyor is positioned properly, check for freedom of movement of the conveyor belt by pulling it for about 60 to 90 cm with your fingers. The conveyor must move freely.

k. Install the drive chain between the conveyor drive sprocket and the motor sprocket. To install the chain, it will be necessary to lift the drive end of the conveyor slightly.

l. Install the conveyor drive motor cover as shown in Figure 2-15.

m. Some ovens are shipped with BOTH perforated AND solid crumb trays, as shown in Figure 2-14. For these ovens, the solid crumb trays should be used for the lower (or a single) oven, while the perforated trays should be used for all upper ovens.

Install the crumb trays as shown in Figure 2-15. First, place the inside edge of each tray onto its support bracket. Then, hook the outside edge of the tray over the end of the conveyor frame.

n. Press the conveyor exit tray down over the edge of the conveyor frame at the exit end of the oven. See Figure 2-15. Then, skip ahead to Section V, Electrical Supply.

Figure 2-13 - Conveyor placement

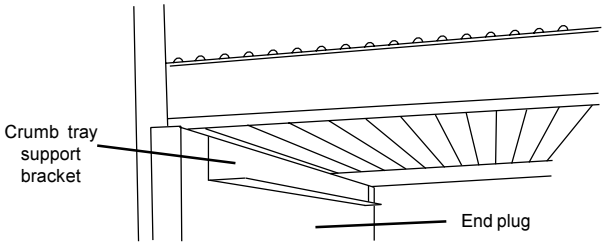

Figure 2-14 - Crumb trays

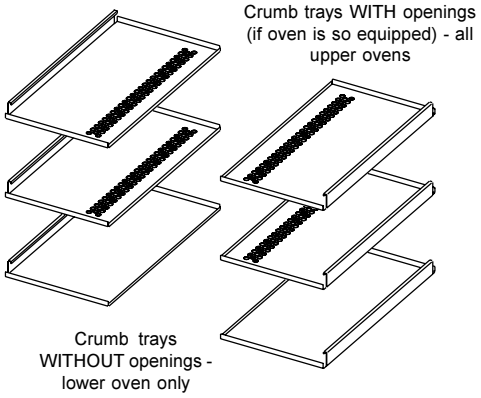

Figure 2-15 - Final assembly

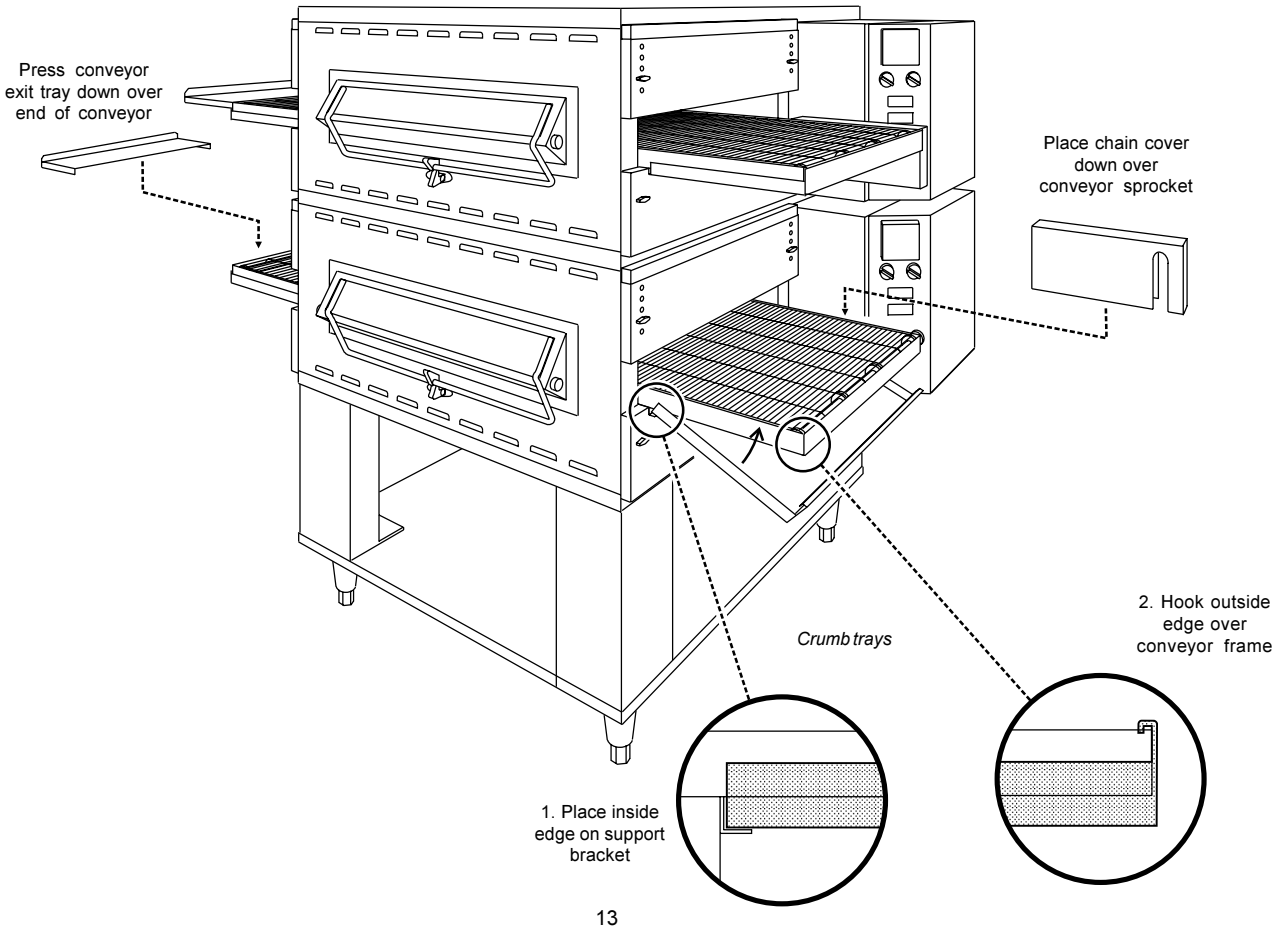

ENGLISH

2. Type 2 Conveyor Installation

a. Partially unfold the conveyor as shown in Figure 2-16. Then, begin to slide the conveyor into the end of the oven. The conveyor can only be installed from the end of the oven with the drive motor.

b. Continue moving the conveyor into the oven until the frame protrudes equally from each end of the oven. Check that the crumb tray supports located on the underside of the conveyor frame rest firmly against the lower end plugs, as shown in Figure 2-16.

c. When the conveyor is positioned properly, check for freedom of movement of the conveyor belt by pulling it for about 2-3 feet (0.75-1.00m) with your fingers. The drive and idler shafts must rotate smoothly, and the belt must move freely without rubbing on the inside of the oven.

d. Check the tension of the conveyor belt as shown in Figure 2-17. The belt should lift about 25mm. DO NOT OVERTIGHTEN THE CONVEYOR BELT.

NOTE:
If necessary, the belt tension can be adjusted by turning the conveyor adjustment screws, located at the idler (non-control) end of the conveyor. See Figure 2-18.

Figure 2-16 - Conveyor installation

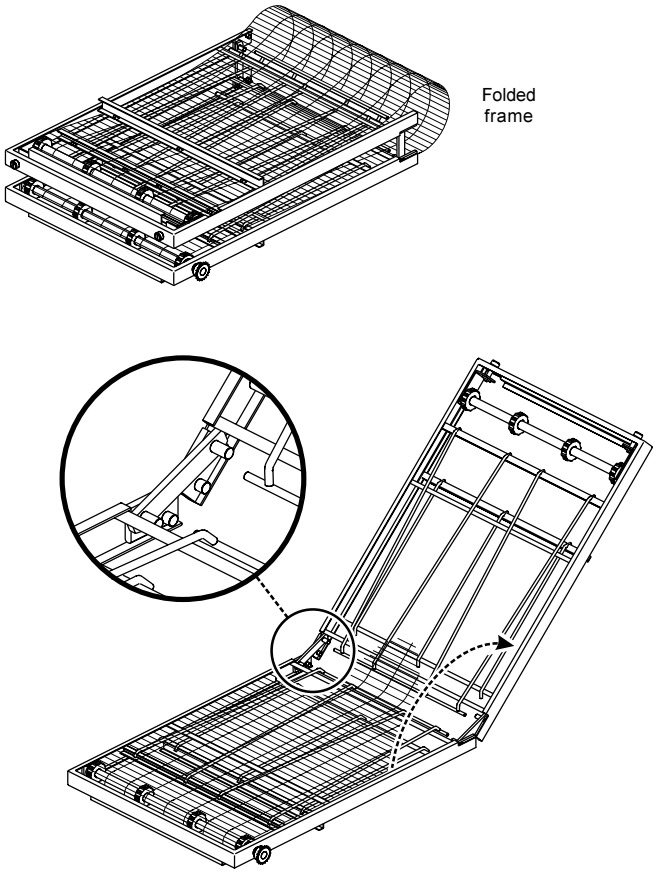

Figure 2-17 - Conveyor placement

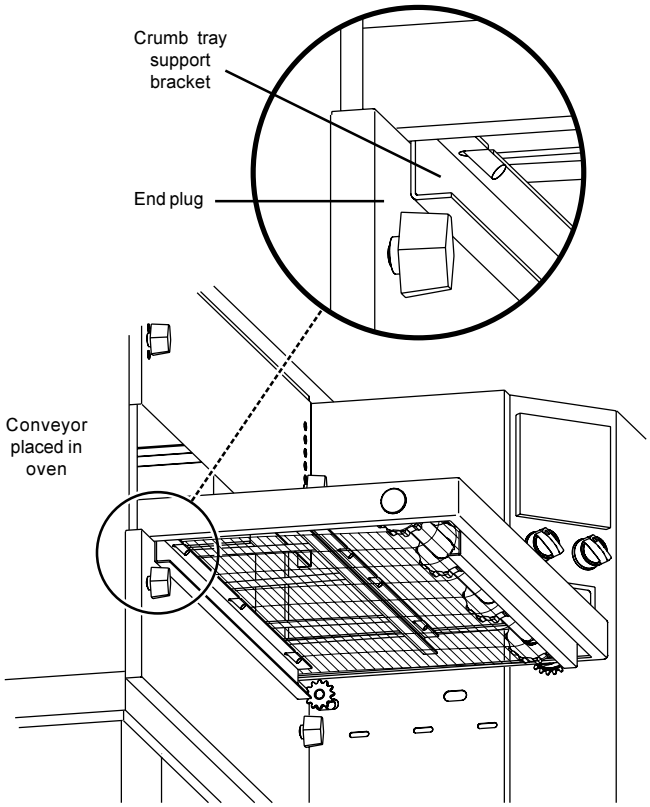

Figure 2-18 - Conveyor belt tension

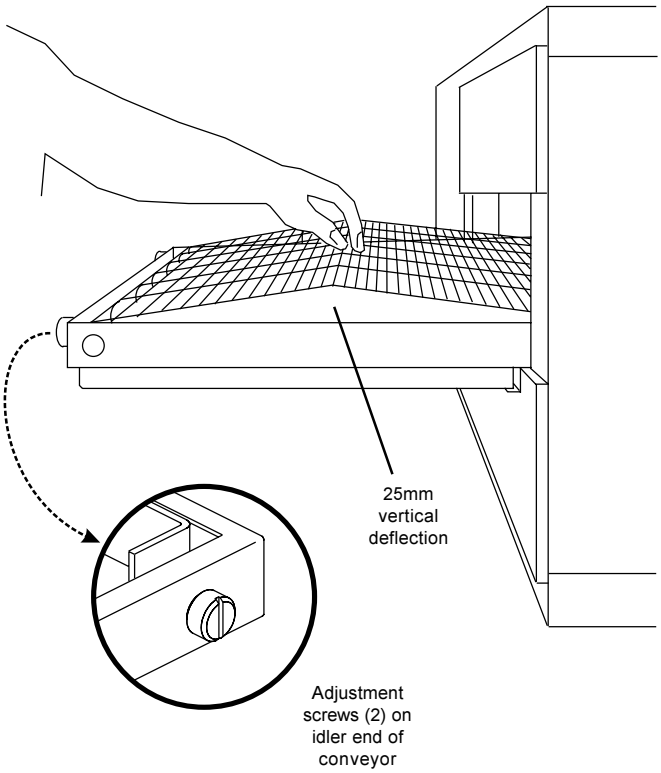

e. If it is necessary to add or remove conveyor links to achieve the correct tension, OR if it is necessary to reverse the conveyor belt for correct orientation, the belt will need to be removed from the conveyor frame. If this is necessary, perform the following procedure:

- Remove the conveyor assembly from the oven and place it flat on the floor.
- Remove the master links using long-nose pliers. Then, roll up the belt along the length of the conveyor frame.
- Add or remove belt links as necessary to achieve the correct belt tension.
- Replace the belt on the conveyor frame. Check that the conveyor belt links are oriented as shown in Figure 2-19, and that the smooth side of the conveyor belt faces UP.
- Connect the inside master links. Check that the links are oriented as shown in Figure 2-19.
- Connect the outside master links. Note that the outside master links each have an open hook on one side. This hook aligns with the hooks along the sides of the other conveyor links. See Figure 2-19.
- Replace the conveyor into the oven.

f. Install the drive chain between the conveyor drive sprocket and the motor sprocket. To install the chain, it will be necessary to lift the drive end of the conveyor slightly.

Figure 2-19 - Conveyor and master link orientation

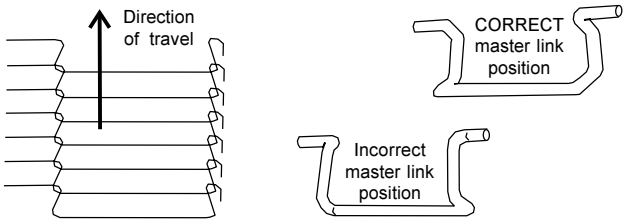

g. Install the conveyor chain cover as shown in Figure 2-20. Check that the chain cover does not bind on the conveyor sprocket or drive shaft.

h. Slide the crumb trays into place as shown in Figure 2-20.

i. Press the conveyor exit tray down over the edge of the conveyor frame at the exit end of the oven. See Figure 2-20. Proceed to Section V, Electrical Supply.

Figure 2-20 - Final assembly

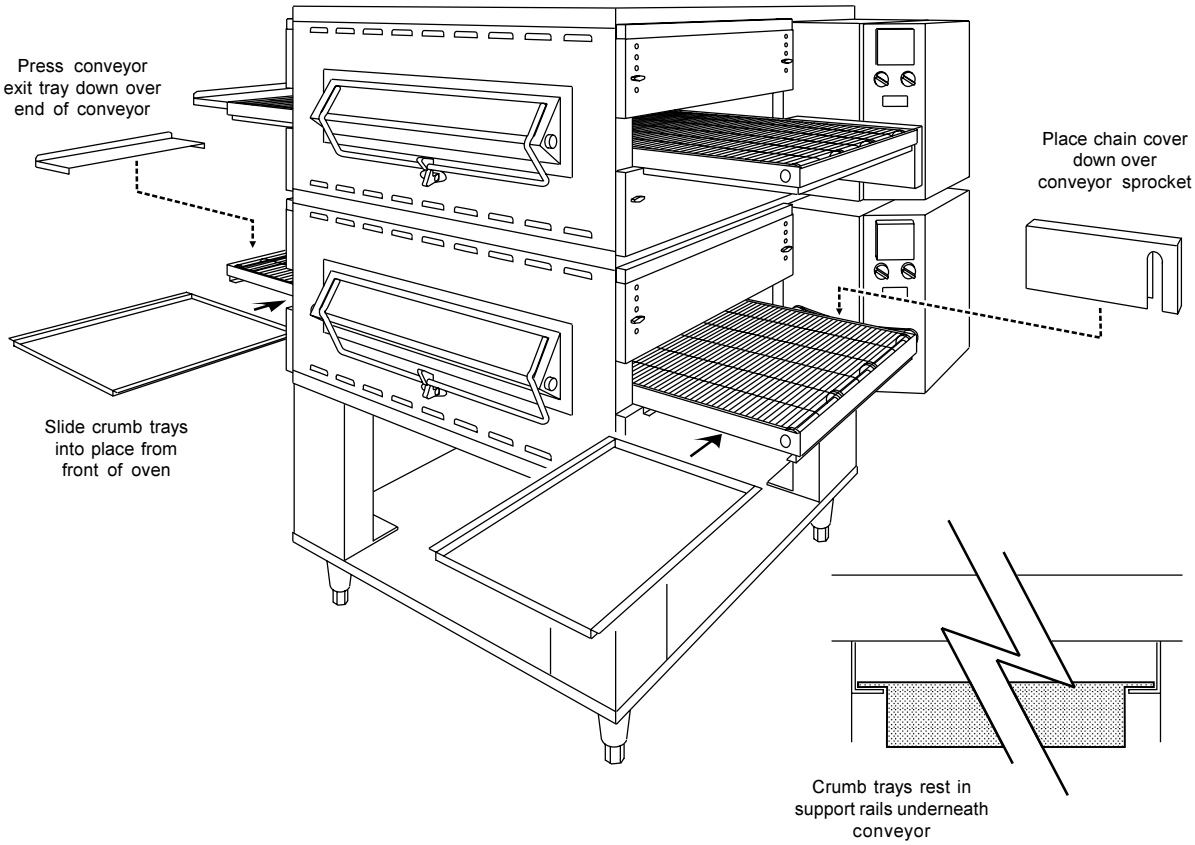

ENGLISH

IV. ELECTRICAL SUPPLY

WARNING
Authorized supplier personnel normally accomplish the connections for the ventilation system, electric supply, and gas supply, as arranged by the customer. Following these connections, the factory-authorized installer can perform the initial startup of the oven.

NOTE: *All aspects of the electrical supply connection must comply with current IEC/CEE requirements and with all applicable local, national, and international codes.*

Check the oven serial plate before making any electric supply connections. Electric supply connections must agree with data on the oven serial plate. The location of the serial plate is shown in Figure 1-1 (in Section 1, Description).

A fused disconnect switch or a main circuit breaker (customer furnished) MUST be installed in the electric supply line for each oven cavity. The circuit breaker/disconnect must have a minimum of 3mm contact separation breaking all poles of the supply. It is recommended that this circuit breaker/disconnect have lockout/tagout capability.

The supply conductors are to be 90°C-rated copper wiring. Additional wiring information is shown on the wiring diagrams in Section 5, Electrical Wiring Diagrams and inside the machinery compartment of the oven.

The oven requires a ground connection to the oven ground screw located in the electrical junction box. (The box is shown in Figure 2-21.) The ground connection must comply with current IEC/CEE requirements and with all applicable local, national, and international codes. If necessary, have the electrician supply the ground wire. *Do NOT use the wiring conduit or other piping for ground connections!*

A. Additional Information - Gas Ovens

All electric supply connections are made via the electrical junction box on the rear of the oven, shown in Figure 2-21. The power lines then connect to the oven circuits through safety switches located inside the machinery compartment and each blower motor compartment. These switches interrupt electric power to the oven when the Machinery Compartment Access Panel is opened, OR when either of the blower or rear shrouds is removed.

B. Additional Information - Electric Ovens

A 33mm dia. cutout in the back wall of the machinery compartment provides access to the electrical supply connections. The actual wiring connections are made at the terminal block located in the electrical junction box. See Figure 2-21.

Using flexible cables for the electric power supply conductors requires a 33mm strain-relief fitting (not furnished with the oven) to enable safe access to the terminal block.

C. Connection

Refer to the wiring diagram inside the machinery compartment, or in Section 5 of this Manual, to determine the correct connections for the electrical supply lines. Connect the supply as indicated on the wiring diagram.

If required by national or local codes, connect an equipotential ground wire to the lug next to the ⏚ symbol (shown in Figure 2-21). The equipotential ground connection must meet all applicable national and local code requirements.

Figure 2-21 - Utility connection locations

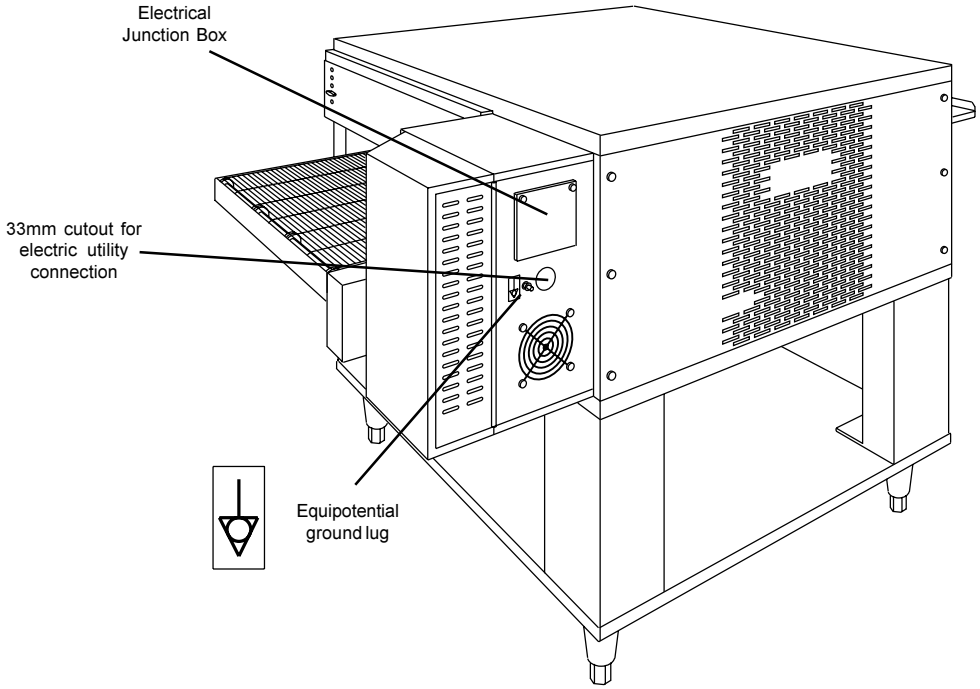

V. GAS SUPPLY

CAUTION

DURING PRESSURE TESTING NOTE ONE OF THE FOLLOWING:

1. The oven and its individual shutoff valve must be disconnected from the gas supply piping system during any pressure testing of that system at test pressure in excess of 3.45 kPa.

2. The oven must be isolated from the gas supply piping system by closing its individual manual shutoff valve during any pressure testing of the gas supply piping system at test pressure equal to or less than 3.45 kPa.

3. If incoming pressure is over 50mbar, a separate regulator MUST be installed in the line BEFORE the individual shutoff valve for the oven.

***WARNING:* To prevent damage to the control valve regulator during initial turn- on of gas, it is very important to open the manual shutoff valve very slowly.**

After the initial gas turn-on, the manual shutoff valve must remain open except during pressure testing as outlined in the above steps or when necessary during service maintenance.

ENGLISH

A. Connection

WARNING

Some procedures in this section may require conversions, readjustments, or service on the oven's gas system. Before performing these procedures, check that the main gas supply valve and the circuit breaker/fused disconnect are in the OFF ("O") position. After completing these procedures, perform a gas leak test before operating the oven.

CAUTION

The terms of the oven's warranty require all start-ups, conversions and service work to be performed by a Middleby Marshall Authorized Service Agent. The installation, start-up and changes required when changing from one gas type to another can be performed ONLY by a certified professional.

NOTE: *The gas supply connection should be according to applicable ISO 228-1 or ISO 7-1 recommendations. All aspects of the gas supply connection must comply with current IEC/CEE requirements and with all applicable local, national, and international codes.*

Check the oven's gas supply requirements before making the gas utility connection. Gas supply requirements are listed on the oven's serial plate and in Table 1-5, Gas Orifice and Pressure Specifications (in Section 1, Description).

Check the serial plate to determine the type of gas to be used with the oven. Check that the gas type indicated matches the local supply at the installation. If the gas type on the serial plate does NOT match the local supply, directions for converting the oven for use with other gases are described in Part B, Preparation for Use with Various Gases, in this section.

One 90° elbow equals a 2.13m length of pipe. The recommended pipe sizes are larger than usually required to eliminate any operation problems. It is much less expensive to make the initial installment large enough to do the job rather than redoing the job later.

Refer to the instructions in the gas hose package (included in the Installation Kit) before connecting the gas line. One gas line connection method is shown in Figure 2-22; however, compliance with the applicable standards and regulations is mandatory.

Figure 2-22 - Flexible Gas Hose Installation

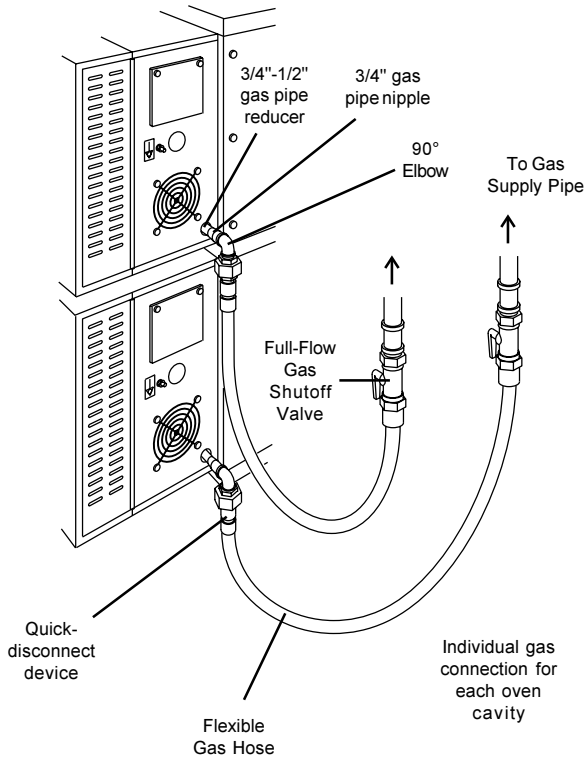

ENGLISH

B. Preparation for Use with Various Gases

Before proceeding to set up the oven for a specific gas, check that the main gas supply valve and the circuit breaker/fused disconnect are in the OFF ("O") position.

The main orifices must match the sizes shown in Table 1-5. If necessary, replace the orifices. Refer to Part C, Replacing the Gas Orifices.

The orifice (manifold) pressure should be adjusted to the value shown in Table 1-5 (in the Description section) for the specific gas type and location.

The actual heat input to the oven must match the rated heat input. The input to the burner can be determined using the orifice (manifold) pressure data or by the volume supplied using the gas meter. Both of these procedures are described in Part E, Checking the Heat Input.

If the measured input does not correspond with the rated input (shown in Table 1-5 in the Description section of this Manual), check first that the correct orifices are installed. If the orifices are correct, check and correct the supply and orifice pressures to obtain the correct input based on the gas meter reading.

C. Replacing the Gas Orifices (if so required)

1. Check that the main gas supply valve and the circuit breaker/fused disconnect are in the OFF ("O") position.
2. Remove AND RETAIN the hex screws that hold the rear wall in place. Then, remove the rear wall panel.
3. Loosen the burner tube fitting, shown in Figure 2-24.
4. Remove AND RETAIN the two screws that hold the manifold in place. Remove the manifold from the oven.
5. Remove and discard the two main orifices.
6. Install the two new main orifices into the manifold.
7. Replace the manifold into the oven. Fasten it in place with the two original mounting screws, and tighten the burner tube fitting.

WARNING
After completing these procedures, perform a gas leak test before operating the oven.

Figure 2-23

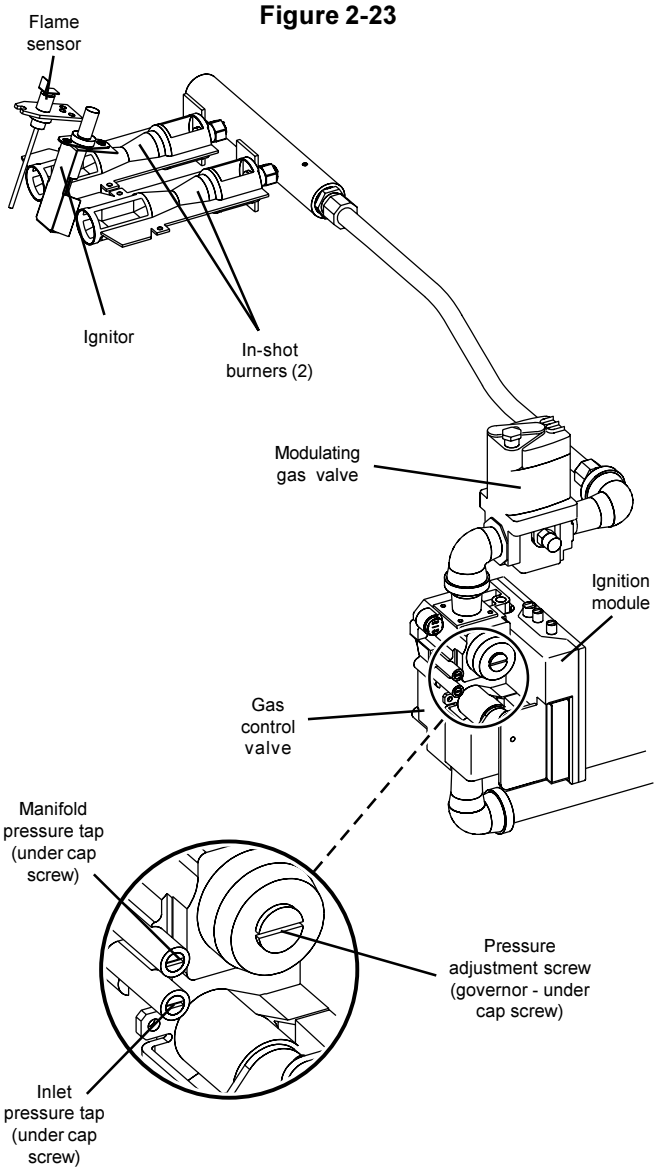

Figure 2-24

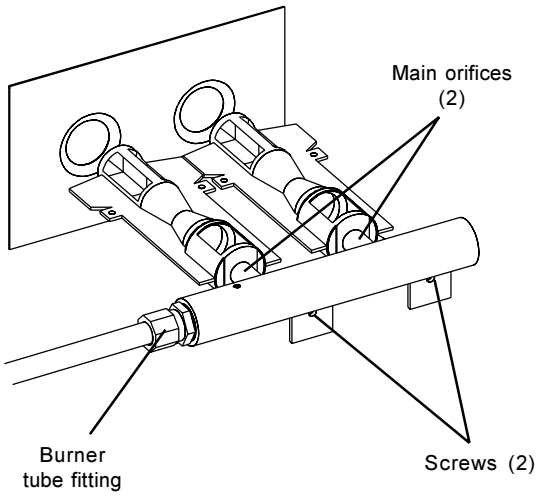

D. Checking the Gas Supply (Inlet) Pressure

1. Remove the supply (inlet) pressure cap screw from the gas control valve. Attach a manometer to the stud.
2. Depress the safety switches to allow the oven to operate.
3. Open the main gas supply valve. Switch the circuit breaker/ fused disconnect to the ON ("I") position.
4. Start the oven according the directions in the Operation section of this Manual. Adjust the temperature controller to the maximum setting (316°C).
5. Measure the supply (inlet) pressure.
6. Switch the oven off. Close the main gas supply valve, and switch the circuit breaker/fused disconnect to the OFF ("O") position. Remove the manometer, and replace the cap screw onto the gas control valve.
7. Compare the measured supply (inlet) pressure to the nominal pressures shown in Table 1-5 (in the Description section of this Manual).

If the supply pressure is lower or higher than the nominal pressure, the reason should be investigated and the gas supplier contacted.

For natural gas ovens, if the measured supply pressure is lower than 17mbar, or higher than 25mbar, contact the gas supplier. DO NOT OPERATE THE OVEN or adjust the oven controls.

E. Adjusting the Orifice (Manifold) Pressure and Heat Input

To use the orifice pressure method, you must know the specific gas type and quality used. If using the orifice pressure method, you should double-check the input using the volumetric method.

To use the volumetric method, you must know the heat value (HuB) of the gas used. This information is available from your gas supplier.

During these measurements, do not operate any other appliances that use the same gas meter as the oven.

1. *Orifice (Manifold) Pressure Method*
   a. Check that the main gas supply valve and the circuit breaker/fused disconnect are in the OFF ("O") position.
   b. Remove the regulated (manifold) pressure cap screw from the gas control valve. Attach a manometer to the stud.
   c. Remove the cap screw from the pressure adjustment screw (governor) on the gas control valve.
   d. Depress the safety switches to allow the oven to operate.
   e. Open the main gas supply valve. Switch the circuit breaker/fused disconnect to the ON ("I") position.
   f. Start the oven according the directions in the Operation section of this Manual. Adjust the temperature controller to the maximum setting (316°C).
   g. Adjust the pressure adjustment screw as necessary to match the correct pressure for the oven's specific gas type. Refer to Table 1-5 in the Description section of this Manual. Turning the adjustment screw clockwise increases the flow, while turning it counterclockwise reduces the flow.
   h. Switch the oven off. Close the main gas supply valve, and switch the circuit breaker/fused disconnect to the OFF ("O") position. Remove the manometer, and replace the cap screws onto the gas control valve.
2. *Volumetric Method*
   a. Determine the time of 0.1m³ (100 liters) of gas usage as follows.

$$\text{Consumption } (m^3/hr.) = \frac{\text{NB (Rated input in kW)}}{\text{HuB (Heat [Calorific] value of gas in kW/m3)}}$$

$$\text{Time (in minutes) of 0.1m3 of gas usage} = \frac{6}{\text{Consumption}}$$

   b. Check that the main gas supply valve and the circuit breaker/fused disconnect are in the OFF ("O") position.
   c. Remove the cap screw from the pressure adjustment screw (governor) on the gas control valve.
   d. Depress the safety switches to allow the oven to operate.
   e. Open the main gas supply valve. Switch the circuit breaker/fused disconnect to the ON ("I") position.
   f. Start the oven according the directions in the Operation section of this Manual. Adjust the temperature controller to the maximum setting (316°C).
   g. Adjust the pressure adjustment screw as necessary to match the calculated volume using the time (in minutes) of 0.1m³ of gas usage. Turning the adjustment screw clockwise increases the flow, while turning it counterclockwise reduces the flow.
   h. Record the reading obtained from the gas meter and calculate the obtained gas flow. Compare this value to the information in Table 1-4 in the Description section of this Manual.
   i. Switch the oven off. Close the main gas supply valve, and switch the circuit breaker/fused disconnect to the OFF ("O") position. Replace the cap screw onto the gas control valve.

NOTES:

SECTION 3 - OPERATION

I. LOCATION AND DESCRIPTION OF CONTROLS

Fig. 3-1 - Control Panel

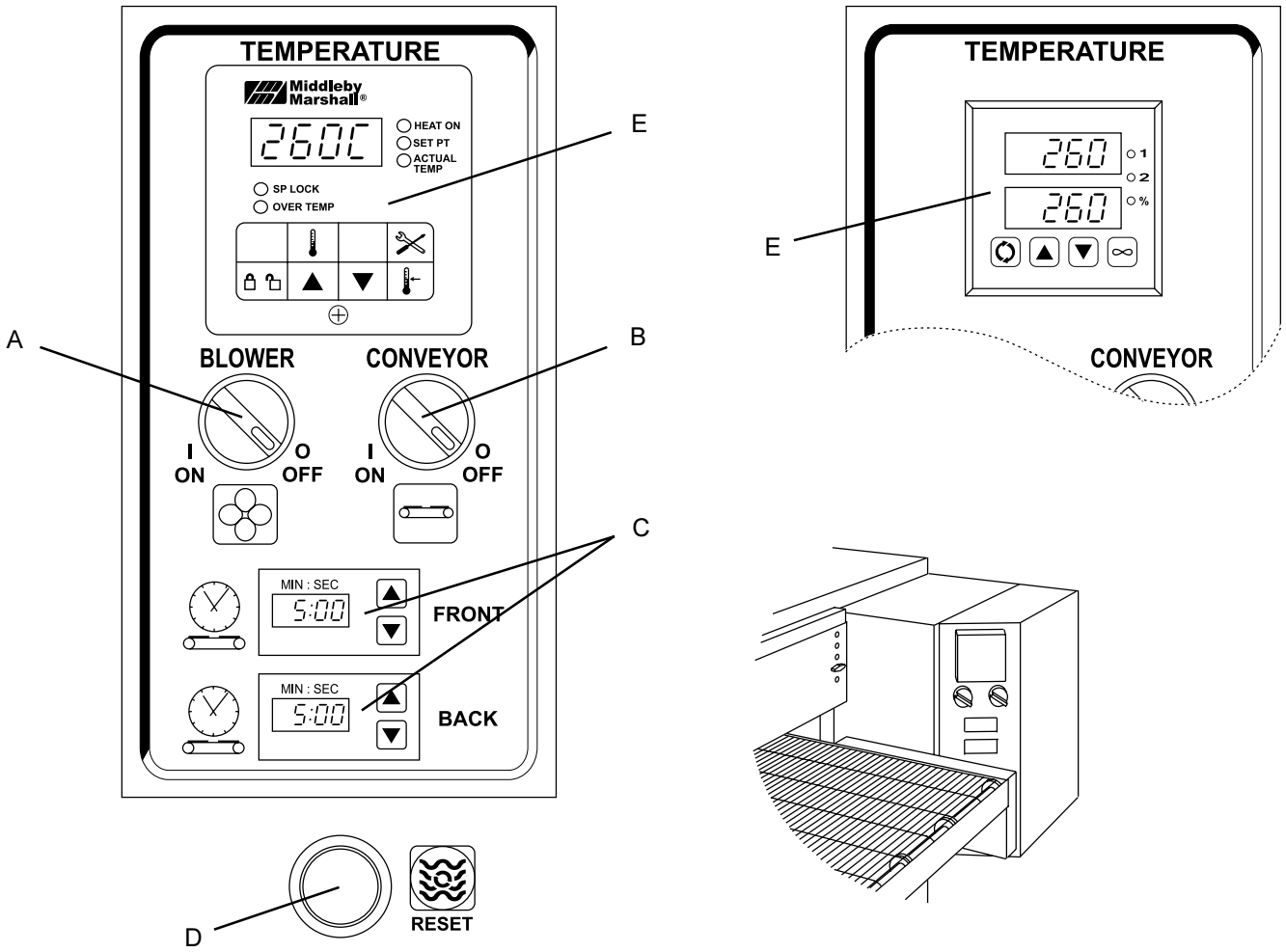

A. **"BLOWER" Switch:** Turns the blowers and cooling fans on and off. When set to the "ON" (I) position, it also allows the heating elements to activate. Activation is determined by the settings on the Digital Temperature Controller.

B. **"CONVEYOR" Switch:** Turns the conveyor drive motor on and off.

C. **Conveyor Speed Controller:** Adjusts and displays the bake time. Single-belt ovens have one controller. Split belt ovens have one controller for each conveyor belt, labeled "FRONT" and "BACK."

D. **"RESET" Switch:** Gas ovens only. Illuminates if the gas burner does not light. The switch can be pressed repeatedly to attempt to light the burner. If the burner does not light within 15 minutes, the "RESET" (RESET) switch is locked out.

E. **Digital Temperature Controller:** Continuously monitors the oven temperature. Settings on the Digital Temperture Controller control the activation of the burner or heating elements. Keypad controls allow the operator to select the cooking temperature and monitor oven operation.

Note that two different models of Digital Temperature Controller are used on PS536 ovens. This section provides instructions specific to each controller.

NOT SHOWN:

F. **Machinery Compartment Access Panel Safety Switch:** Disconnects electrical power to the controls and the blowers when the machinery compartment access panel is opened. The panel should only be opened by authorized service personnel.

ENGLISH

ENGLISH

II. NORMAL OPERATION - STEP-BY-STEP

A. DAILY STARTUP PROCEDURE

1. Check that the circuit breaker/fused disconnect is in the on position. Check that the window (if so equipped) is closed.

2. Turn the "BLOWER" switch to the "ON" ("I") position.

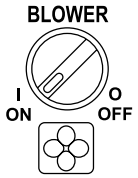

3. Turn the "CONVEYOR" switch to the "ON" ("I") position.

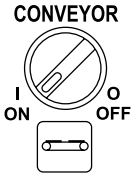

4. If necessary, adjust the conveyor speed setting by pressing the ▲ or ▼ pushbuttons on the conveyor speed controller to change the displayed bake time.

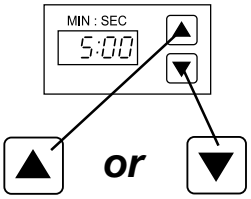

If the oven uses this Digital Temperature Controller:

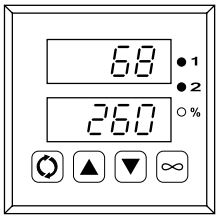

5a. Press the ▲ or ▼ pushbuttons on the digital temperature controller to adjust the set temperature, if necessary.

Note that the set temperature is shown in the lower window of the display, while the actual oven temperature is shown in the upper window.

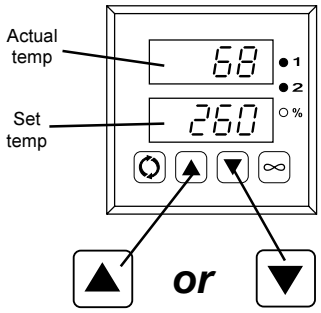

6a. Check that the "1" light illuminates. This shows that the burner or heating elements have been turned on.

The "2" light will illuminate while the oven heats to its minimum normal operating temperature of 93°C.

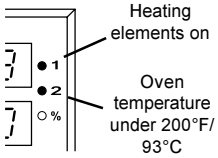

7a. Wait for the oven to heat to the set point temperature. Higher set point temperatures will require a longer wait. The oven can reach a temperature of 232°C in approximately 15 minutes.

8a. Allow the oven to preheat for 10 minutes after it has reached the set point temperature.

If the oven uses this Digital Temperature Controller:

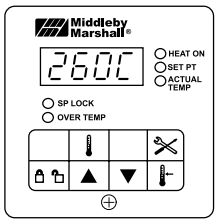

5b. Adjust the temperature controller to a desired set temperature, if necessary.

- Press the Set Point and Unlock keys at the same time. Wait for the "SET PT" light to turn on.

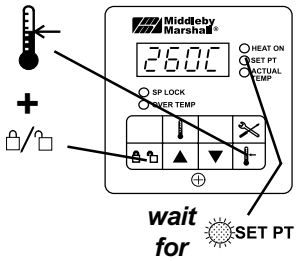

- Press the Up Arrow and Down Arrow Keys as necessary to adjust the set-point.

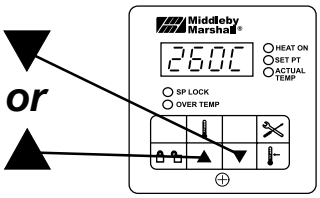

6b. Check that the "HEAT ON" light illuminates. This shows that the burner or heating elements have been turned on.

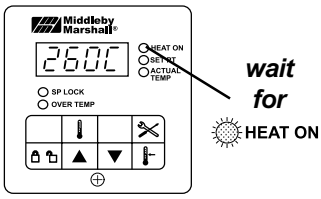

7b. (Gas ovens only) If the "RESET" (RESET) switch illuminates, the gas burner did not light. Press the "RESET" (RESET) switch (repeatedly if necessary) to attempt to light the burner.

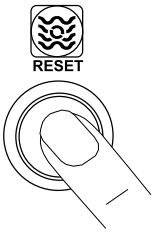

NOTE: *If the burner does not light within 15 minutes, the oven enters a safety lockout mode that disables the "RESET" (RESET) switch. If this occurs, turn the "HEAT" (), "BLOWER" (), and "CONVEYOR" () switches to the "OFF" ("O") position. Wait for AT LEAST FIVE MINUTES. Then, repeat the Daily Startup procedure.*

8b. Wait for the oven to heat to the setpoint temperature. Higher setpoint temperatures will require a longer wait. The oven can reach a temperature of 232°C in approximately 5 minutes.

9b. Allow the oven to preheat for 10 minutes after it has reached the set point temperature.

B. DAILY SHUTDOWN PROCEDURE

1. Turn the "BLOWER" () and "CONVEYOR" () switches to the "OFF" ("O") position. Open the window (if so equipped) to allow the oven to cool faster.

   Note that the blowers will remain in operation until the oven has cooled to below 93°C.

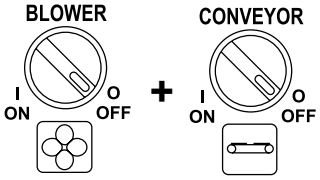

2. After the oven has cooled and the blowers are off, switch the circuit breaker/fused disconnect to the off position.

CAUTION

In case of power failure, turn all switches to the "OFF" ("O") position, open the oven window, and remove the product. After the power has been restored, perform the normal startup procedure.

On gas ovens, the burner will not operate and gas will not flow through the burner without electric power. No attempt should be made to operate the oven during a power failure.

ENGLISH

III. QUICK REFERENCE: DIGITAL TEMPERATURE CONTROLLERS

ENGLISH

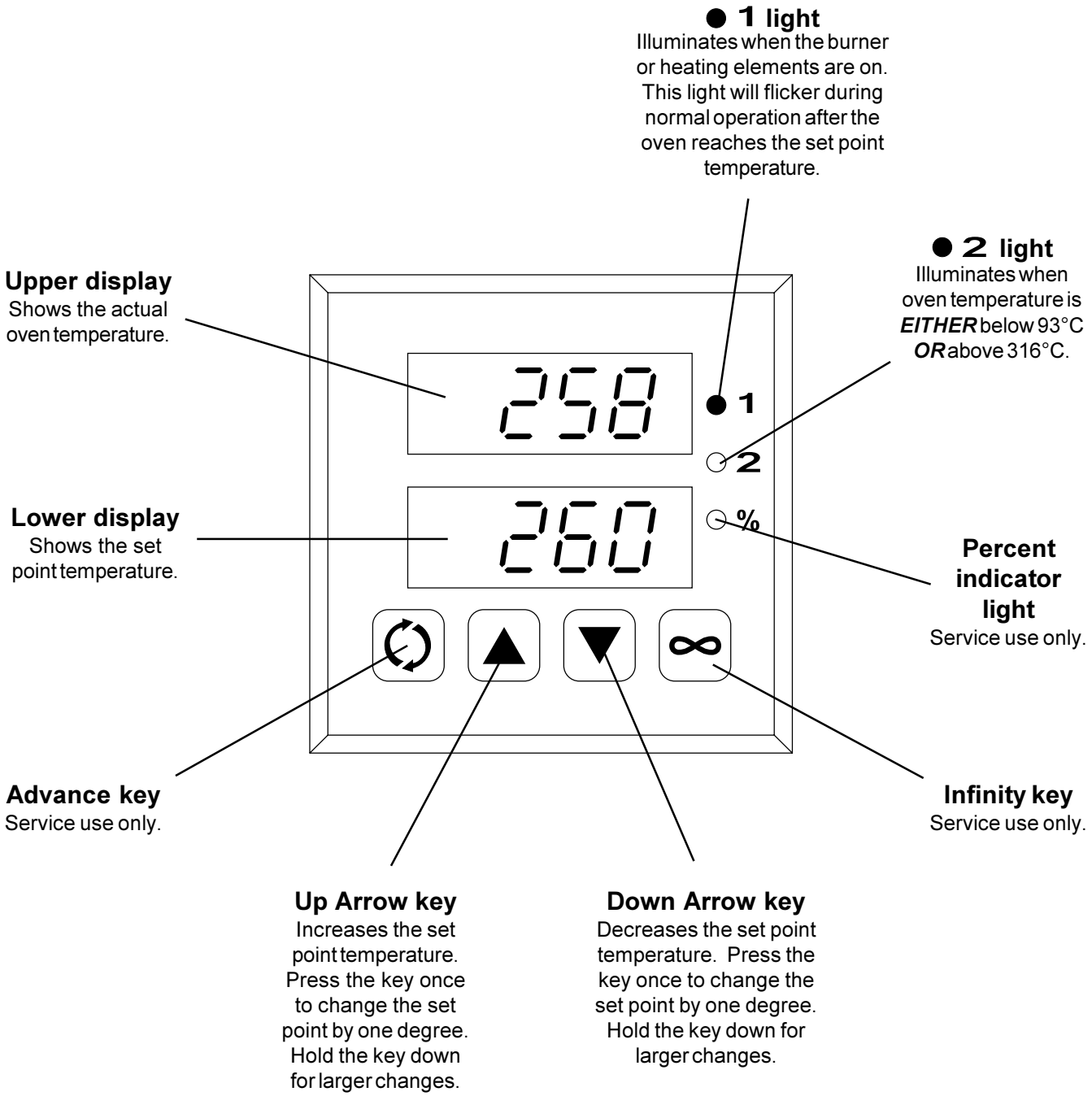

ENGLISH

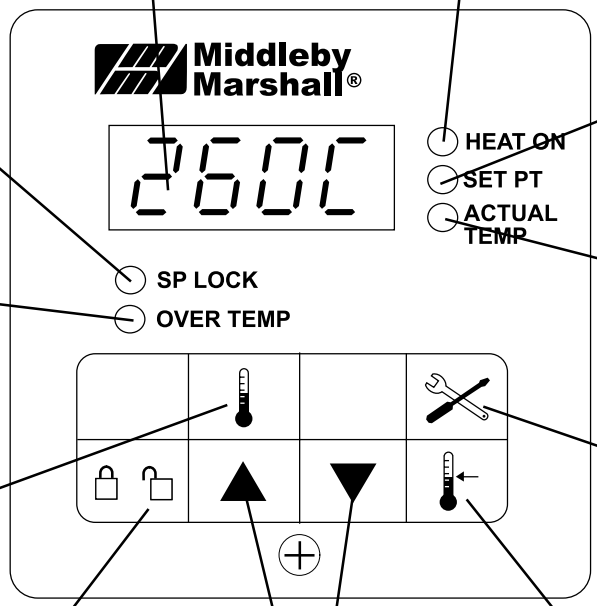

Display
Shows the Set Point or the Actual Temperature in degrees Fahrenheit (F) or Celsius (C).

"HEAT ON" Light
Lights when the burner or heating elements, as appropriate for the oven model, are in operation.

"SP LOCK" Light
Lights when the set point is locked out from changes. This setting can only be changed by service personnel.

"SET PT" (setpoint) Light
Lights when the set point is shown in the display.

OVERTEMP Light
Lights when the oven temperature is greater than 343°C. Refer to Quick Reference: Troubleshooting in this section.

"ACTUAL TEMP" Light
Lights when the Actual Temperature is shown in the display.

Temperature Key
Press this key once to view the Actual Temperature in the Display.

Service Key
Service use only.

Unlock Key
Press this key together with the Set Point Key to allow the Set Point to be changed. Changes can only be made for 60 seconds.

Up Arrow and Down Arrow Keys
Press these keys to adjust the Set Point up or down. If the Set Point will not change, refer to Set Point Key and Unlock Key in this section.

Set Point Key
Press this key together with the Unlock Key to allow the Set Point to be changed. Changes can only be made for 60 seconds.

ENGLISH

IV. QUICK REFERENCE: TROUBLESHOOTING

SYMPTOM	PROBLEM	SOLUTION
● 2 *light illuminates after oven has been operating normally*	The oven temperature is in excess of 316°C. If the oven is left in operation, the temperature may rise to 343°C and cause a shutdown.	• Turn the oven off according to the Daily Shutdown Procedure. • Allow the oven to cool. Regardless of the time that is required for the oven to cool, wait for AT LEAST FIVE MINUTES before restarting the oven. • Repeat the Daily Startup Procedure.
Oven shuts down completely during operation OVERTEMP *light is lit, oven will not heat*	The oven temperature exceeded 343°C, and the oven was automatically shut down.	• Turn the oven off according to the Daily Shutdown Procedure. Contact your Middleby Marshall Authorized Service Agent to determine and correct the cause of the condition to prevent damage to the oven.
rSEt *appears in display, oven is not heating*	The oven did not reach 93°C within 15 minutes of startup, and has stopped heating.	• Turn the "BLOWER" ( ) and "CONVEYOR" ( )switches to the "OFF" ("O") position. • Wait for AT LEAST FIVE MINUTES before restarting the oven. • Repeat the Daily Startup procedure.
"RESET" (RESET) switch is illuminated, oven will not heat (gas ovens only)	The gas burner did not light within 90 seconds of turning the "HEAT" ( ) Switch to the "ON" ("I") position.	• Press the "RESET" (RESET) switch (repeatedly if necessary) to attempt to light the burner. • If the burner does not light within 15 minutes, the oven will enter a safety lockout mode that disables the "RESET" (RESET) switch. If this occurs, turn the "HEAT" ( ), "BLOWER" ( ), and "CONVEYOR" ( )switches to the "OFF" ("O") position. Wait for AT LEAST FIVE MINUTES before restarting the oven. Then, repeat the Daily Startup procedure.
Oven will not turn on at all	Electrical power may not be reaching the oven, or the controls may be set incorrectly.	• Check that the circuit breaker/fused disconnect is turned on. • Check that the "BLOWER" ( ) Switch is in the "ON" ("I") position. The burner cannot engage until the blowers are in operation.
Oven will not heat	Controls may be set incorrectly.	• Check that the Set Point is correctly set. • Check that the "BLOWER" ( ) Switch is in the "ON" ("I") position. • If the oven still will not heat, turn the oven off according to the instructions in the Daily Shutdown Procedure. • Wait for AT LEAST FIVE MINUTES before restarting the oven. • Repeat the Daily Startup Procedure. Check that the Set Point is above 93°C.
Oven is operating, but little or no air is blowing from air fingers	Air fingers may have been reassembled incorrectly after cleaning.	• Turn the oven off according to the Daily Shutdown Procedure. • Refer to Section 4, Maintenance, for instructions on reassembling the air fingers.
	Blower belt may be broken.	• Turn the oven off according to the Daily Shutdown Procedure. Contact your Middleby Marshall Authorized Service Agent to correct the problem.
Conveyor moves with a jerky motion, or will not move at all	Conveyor may be jammed on an object in the oven, or conveyor belt or drive chain may be overtightened.	• Turn the oven off according to the Daily Shutdown Procedure. • Check if the conveyor is blocked by an object inside the oven. • Check that the conveyor drive chain is not overtightened. • Refer to Section 4, Maintenance, for instructions on checking the conveyor belt tension.
Food products are overcooked or undercooked	Controls may be set incorrectly.	• Check that the set temperature and bake time settings are correct.

IF THESE STEPS FAIL TO RESOLVE THE PROBLEM, CONTACT YOUR LOCAL MIDDLEBY MARSHALL AUTHORIZED SERVICE AGENT. A SERVICE AGENCY DIRECTORY IS SUPPLIED WITH YOUR OVEN.

SECTION 4 - MAINTENANCE

ENGLISH

WARNING

Before ANY cleaning or servicing of the oven, perform the following procedure:

1. Switch off the oven and allow it to cool. Do NOT service the oven while it is warm.
2. Turn off the electric supply circuit breaker(s) and disconnect the electric supply to the oven.
3. If it is necessary to move a gas oven for cleaning or servicing, disconnect the gas supply connection before moving the oven.

When all cleaning and servicing is complete:

1. If the oven was moved for servicing, return the oven to its original location.
2. For gas ovens, reconnect the gas supply.
3. Reconnect the electrical supply.
4. For gas ovens, turn on the full-flow gas safety valve. Test the gas line connections for leaks using approved leak test substances or thick soap suds.
5. Turn on the electric supply circuit breaker(s).
6. Perform the normal startup procedure.

WARNING

Possibility of injury from moving parts and electrical shock exists in this oven. Switch off and lockout/tagout the electric supply BEFORE beginning to disassemble, clean, or service any oven. Never disassemble or clean an oven with the BLOWER switch or any other circuit of the oven switched on.

CAUTION

NEVER use a water hose, water jet, or pressurized steam-cleaning equipment when cleaning this oven. DO NOT use excessive amounts of water, to avoid saturating the oven insulation. DO NOT use a caustic oven cleaner, which can damage the aluminized bake chamber surfaces.

NOTE

ANY replacement parts that require access to the interior of the oven may ONLY be replaced by a Middleby Marshall Authorized Service Agent. It is also strongly recommended that the 3-Month Maintenance and 6-Month Maintenance procedures in this section be performed ONLY by a Middleby Marshall Authorized Service Agent.

I. MAINTENANCE - DAILY

A. Check that the oven is cool and the power is disconnected, as described in the warning at the beginning of this Section.

B. Clean ALL of the cooling fan grills and vent openings with a stiff nylon brush. Refer to Figure 4-1 for the locations of the grills and vents.

C. Clean the outside of the oven with a soft cloth and mild detergent.

D. Check that ALL cooling fans are operating properly.

CAUTION
If a cooling fan is not operating correctly, it must be replaced IMMEDIATELY. Operating the oven without adequate cooling can seriously damage the oven's internal components.

E. Clean the conveyor belts with a stiff nylon brush. This is more easily accomplished by allowing the conveyor to run while you stand at the exit end of the conveyor. Then, brush the crumbs off the conveyor as it moves.

F. Remove and clean the crumb trays. Be sure to replace the trays in the same positions from which they were removed, because they are NOT identical. Refer to Figure 2-11 (in Section 2, Installation).

G. Clean the window (if so equipped) in place.

Figure 4-1 -Cooling Vents and Grills

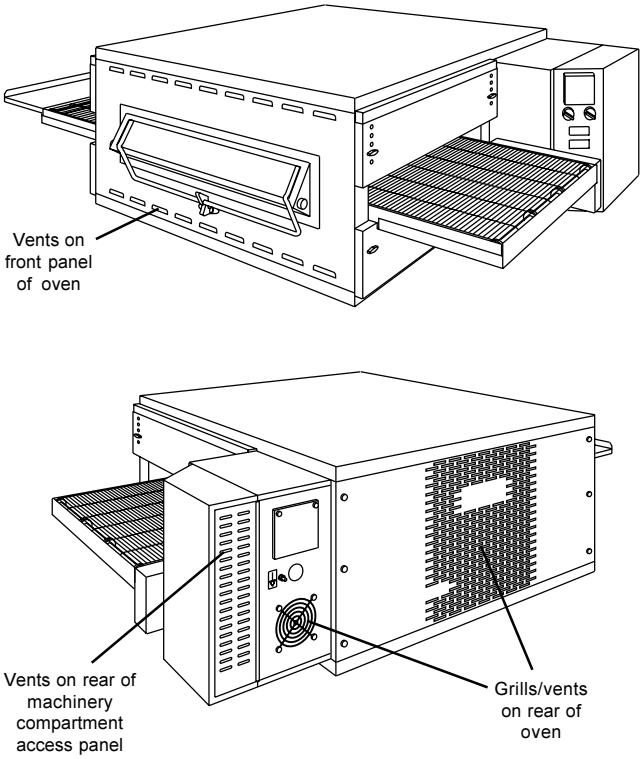

ENGLISH

II. MAINTENANCE - MONTHLY

A. Check that the oven is cool and the power is disconnected, as described in the warning at the beginning of this Section.

B. Refer to Part C, Conveyor Installation, in the Installation section of this Manual. Then, remove the following components from the oven:
- Conveyor exit tray
- Crumb trays
- Chain cover
- End plugs
- Conveyor assembly

C. Slide the air fingers and blank plates out of the oven, as shown in Figure 4-2. AS EACH FINGER OR PLATE IS REMOVED, WRITE A "LOCATION CODE" ON IT WITH A MARKER to make sure that it can be reinstalled correctly.

Example of markings:

(Top Row)	**T1**	**T2**	**T3**	**T4**
(Bottom Row)	**B1**	**B2**	**B3**	**B4**

D. Disassemble the air fingers. See Figure 4-3. AS EACH FINGER IS DISASSEMBLED, WRITE THE "LOCATION CODE" FOR THE FINGER ON ALL THREE OF ITS PIECES. This will help you in correctly reassembling the air fingers.

CAUTION

Incorrect reassembly of the air fingers will change the baking properties of the oven.

E. Clean the air finger components and the interior of the baking chamber using a vacuum cleaner and a damp cloth. Refer to the boxed warnings at the beginning of this Section for cleaning precautions.

F. Reassemble the air fingers. Then, replace them in the oven, using the "location code" as a guide.

G. Install the end plugs on the oven. Then, reinstall the conveyor.

H. Reattach the drive chain. Replace the chain cover.

I. Check the tension of the conveyor belt as shown in Figure 2-7 (in Section 2, Installation). The belt should lift between 25-50mm. If necessary, adjust the belt tension using the procedure in Part C (Conveyor Installation) in the Installation section of this Manual.

J. Replace the crumb trays and exit tray onto the oven.

III. MAINTENANCE - EVERY 3 MONTHS

A. Check that the oven is cool and the power is disconnected, as described in the warning at the beginning of this Section.

B. Open the machinery compartment access panel. Vacuum the inside of the compartment using a shop vacuum.

C. Tighten all electrical control terminal screws.

Figure 4-2 - Removing Air Fingers and Plates

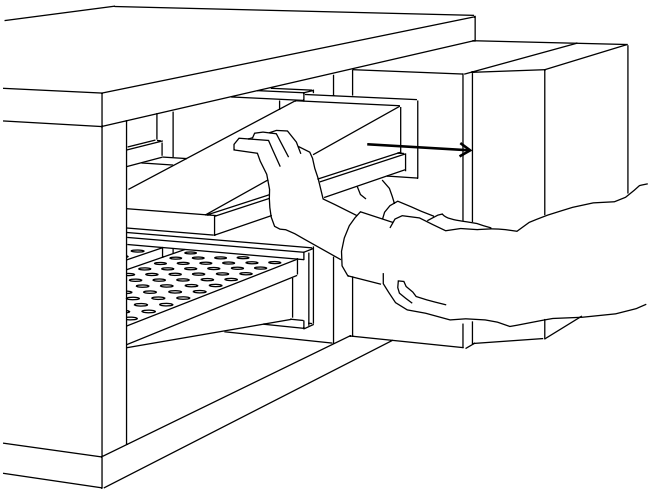

Figure 4-3 - Disassembling the Air Fingers

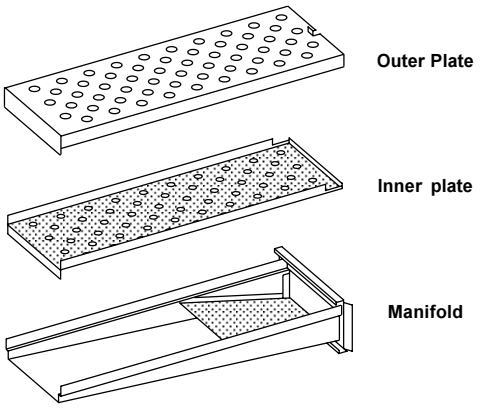

D. **Split Belt Disassembly and Cleaning**

For split belt ovens ONLY, disassemble, clean and lubricate the conveyor shaft components as described in this Section.

PS536 ovens may be equipped with either of two different conveyor designs. Both designs are available in split belt configurations. Refer to Figures 4-4 and 4-5 to determine which conveyor was shipped with your oven.

- If your oven uses the Type 1 Conveyor, continue on to Step 1 in this section, "Type 1 Conveyor Split Belt Cleaning."
- If your oven uses the Type 2 Conveyor, skip ahead to Step 2 in this section, "Type 2 Conveyor Split Belt Cleaning."

Figure 4-4 - Identifying the Type 1 split belt conveyor

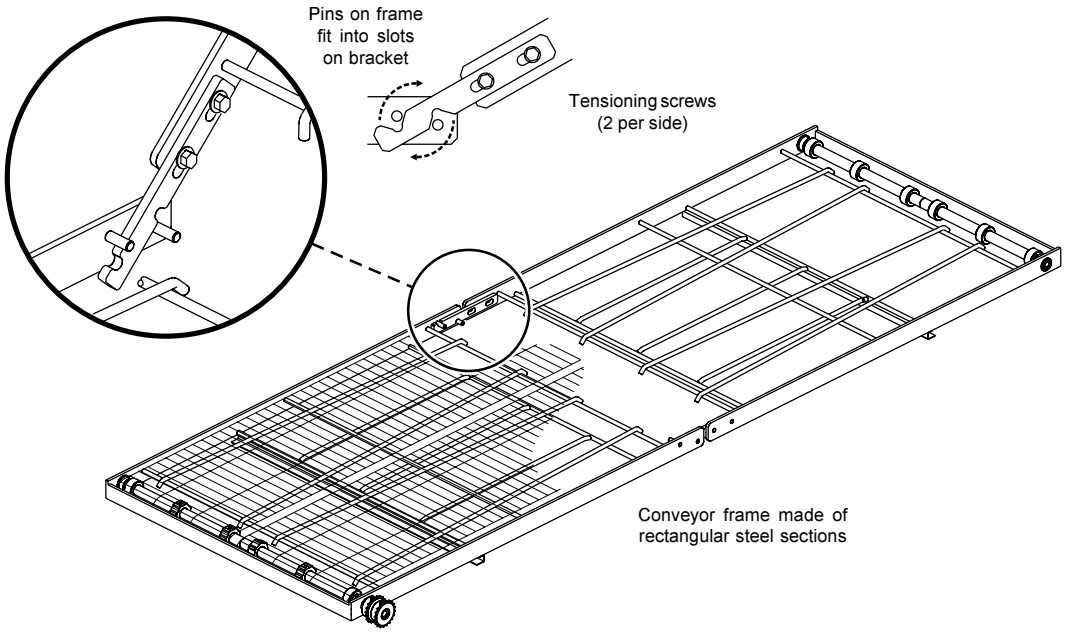

Figure 4-5 - Identifying the Type 2 split belt conveyor

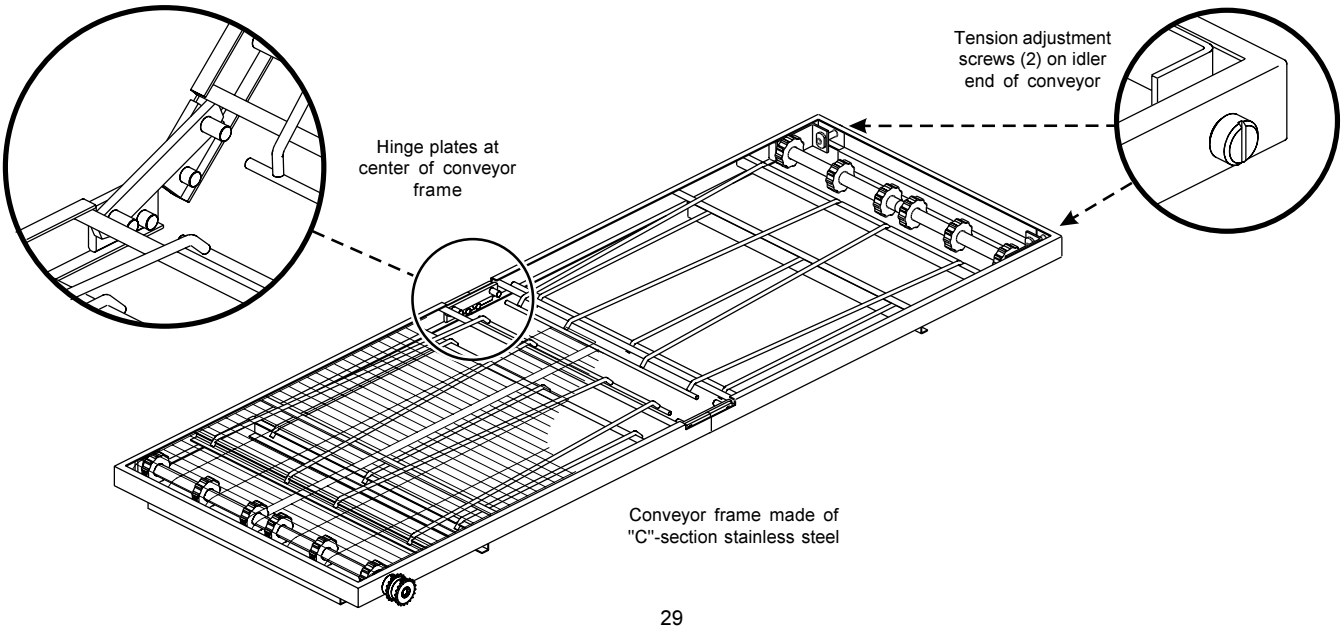

ENGLISH

1. **Type 1 Conveyor Split Belt Cleaning**

a. Refer to Part C, Conveyor Installation, in the Installation section of this Manual. Then, remove the following components from the oven:
   - Conveyor exit tray
   - Crumb trays
   - Chain cover
   - End plugs
   - Conveyor assembly

b. Remove the master links from each conveyor belt. Then, roll the belts up along the length of the conveyor to remove them from the frame.

c. Loosen (DO NOT REMOVE) the set screw on the outer drive sprocket. Then, slide the drive sprocket off the end of the drive shaft. See Figure 4-6.

d. Loosen (DO NOT REMOVE) the set screws on all four steel spacers (2 per shaft), AND on all twelve conveyor belt sprockets (6 per shaft).

e. Gently work the shaft sections out of the conveyor frame, removing the conveyor belt sprockets as necessary. See Figures 4-6 and 4-7.

f. Slide the two sections of each shaft apart.

g. Clean all of the shaft components thoroughly using a rag. Then, lubricate each solid inner shaft, AND the interiors of each hollow shaft, using a light food-grade lubricant. DO NOT lubricate the shafts using WD40 or a similar product. This can cause the shafts to wear rapidly.

h. Slide the hollow shaft sections over the solid inner shafts. Check that the hollow section that has a drive sprocket attached is placed at the end of the the drive shaft.

i. Slide the reassembled shafts into the conveyor frame. As the shafts are replaced, slide the steel spacers and conveyor belt sprockets onto the shafts. Refer to Figures 4-6 and 4-7.

j. After the shafts are properly aligned, position the steel spacers against the ends of the bushings on the conveyor frame. Tighten the set screws on the spacers to hold them in place. Leave the conveyor belt sprockets loose at this time.

k. Replace the outer drive sprocket. Tighten its set screw to hold it in place.

l. Refer to Part C, Conveyor Installation, in the Installation section of this Manual to replace the conveyor belt. As you replace the belt, position the conveyor belt sprockets.

m. After the belt is in place and the sprockets are correctly positioned, tighten the set screws to hold the sprockets in place.

n. Reinstall the end plugs and conveyor onto the oven.

o. Reattach the drive chains. Replace the chain cover.

p. Check the tension of the conveyor belt as shown in Figure 2-11 (in Section 2, Installation). The belt should lift between 25-50mm. If necessary, adjust the belt tension using the procedure in Part C (Conveyor Installation) in the Installation section of this Manual.

q. Replace the crumb trays and exit tray onto the oven. Then, skip ahead to Part E, "Blower Belt."

Figure 4-6 - Disassembling the drive shaft

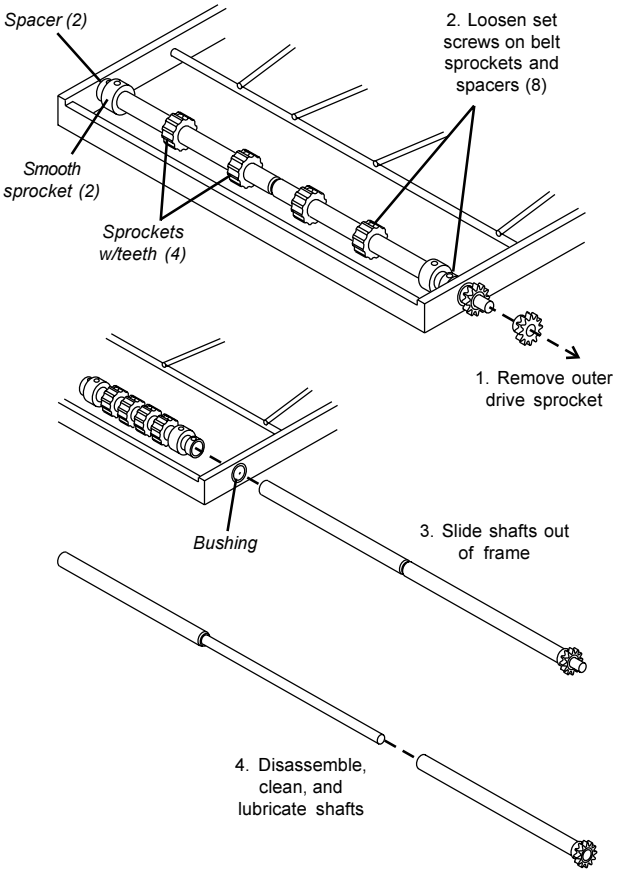

Figure 4-7 - Disassembling the idler shaft

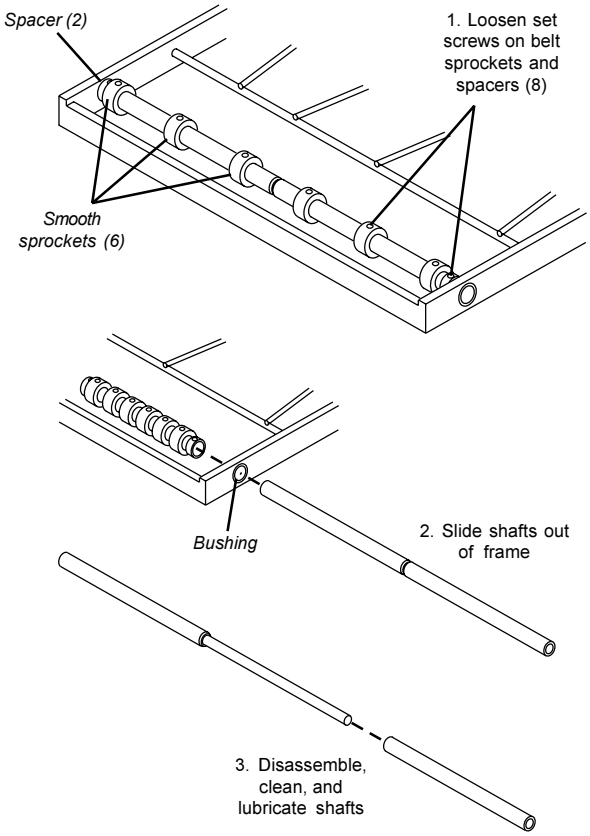

1. **Type 2 Conveyor Split Belt Cleaning**

a. Refer to Part C, Conveyor Installation, in the Installation section of this Manual. Then, remove the following components from the oven:

- Conveyor exit tray
- Crumb trays
- Chain cover
- End plugs
- Conveyor assembly

b. Remove the master links from each conveyor belt. Then, roll the belts up along the length of the conveyor to remove them from the frame.

c. Remove the two conveyor adjustment screws from the idler end of the conveyor frame, as shown in Figure 4-8.

d. Remove the idler shaft assembly from the conveyor.

e. Pull apart the two sections of the idler shaft.

f. Clean the shafts thoroughly using a rag. Then, lubricate both the extended shaft and the interior of the hollow shaft using a light food-grade lubricant. DO NOT lubricate the shafts using WD40 or a similar product. This can cause the shafts to wear rapidly.

g. Before reassembling the shafts into the conveyor frame, check that they are oriented properly.

h. Reassemble the idler shaft into the conveyor. Make sure that the bronze washer is in place between the two sections of the shaft. See Figure 4-10.

i. Replace the conveyor adjustment screws as shown in Figure 4-8. To allow the conveyor belt to be reinstalled later, do not tighten the screws at this time.

j. Loosen the set screw on both of the conveyor drive sprockets. Then, remove the sprockets from the shaft.

k. Loosen the locking collar set screw, as shown in Figure 4-9.

l. Push the drive shaft towards the drive sprocket, and lift it free of the conveyor frame. Then, disassemble and lubricate the two sections of the drive shaft as described for the idler shaft, above.

m. Before reassembling the shafts into the conveyor frame, check that they are oriented properly.

n. Reassemble the drive shaft into the conveyor. Check that the nylon spacer is in place, as shown in Figure 4-10. Also, check that the bronze washer is in place between the two sections of the shaft.

o. Replace the drive sprockets. Reassemble the belts and master links onto the conveyor.

p. Reinstall the end plugs and conveyor onto the oven.

q. Reattach the drive chains. Replace the chain cover.

r Check the tension of the conveyor belt as shown in Figure 2-18 (in Section 2, Installation). The belt should lift about 25mm. If necessary, adjust the belt tension by turning the conveyor adjustment screws.

s. Replace the crumb trays and exit tray onto the oven. Then, skip ahead to Part E, "Blower Belt."

Figure 4-8 - Split Belt Idler Shaft

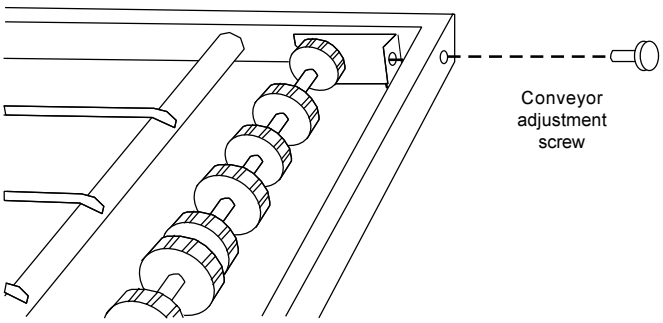

Figure 4-9 - Split Belt Drive Shaft

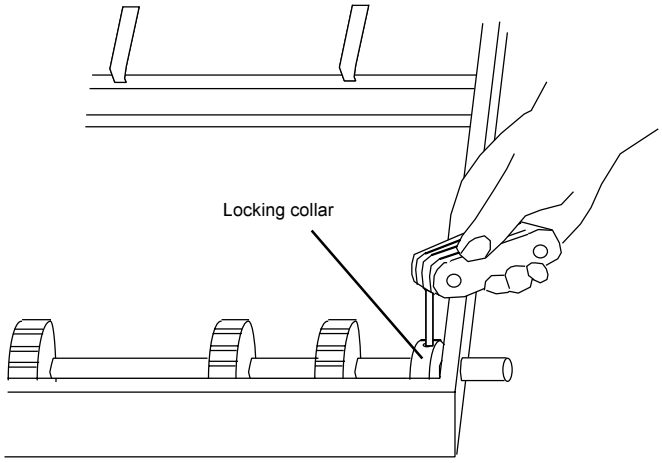

Figure 4-10 - Washer and Spacer

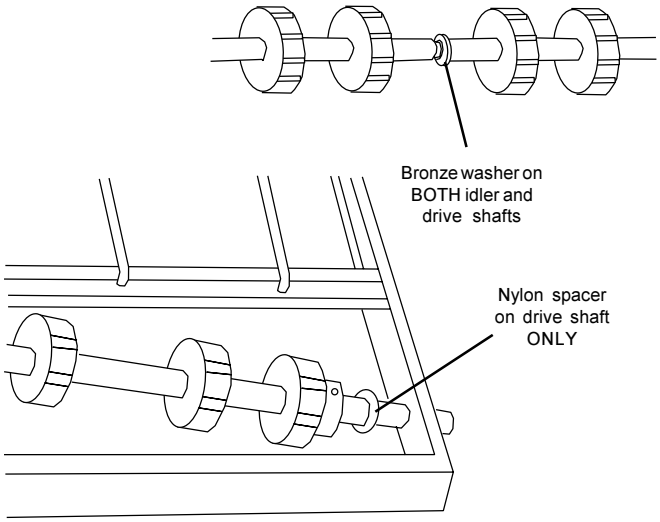

ENGLISH

E. Blower Belt

1. Remove the six screws shown in Figure 4-11. Then, remove the rear panel from the oven.
2. Check the blower belt for the proper 6.4mm deflection at the center, and for cracking or excessive wear. See Figure 4-11. Overtightening the belt will cause premature bearing failure and possible vibrations. A loose belt may also cause vibrations.
3. If necessary, adjust the tension of the belt by loosening the four motor mounting bolts. Reposition the motor as neccessary until the correct 6.4mm deflection is reached, then tighten the bolts.

F. Lubricating the Blower Fan Bearings

1. Use a grease gun to lubricate the main blower fan shaft bearings, shown in Figure 4-11.

   When lubricating the bearings:
   - Use a high-quality NLGI #2, lithium soap grease with petroleum oil, such as Middleby P/N 17110-0015.
   - Add the grease slowly until a small bead of grease is present at the seals. AVOID OVERGREASING. Excessive greasing may cause harm to the bearing.
2. Manually turn the blower shaft by pulling on the belt to purge the grease. Wipe off any excess grease.
3. Replace the rear panel onto the oven.

Figure 4-11 - Rear panel access

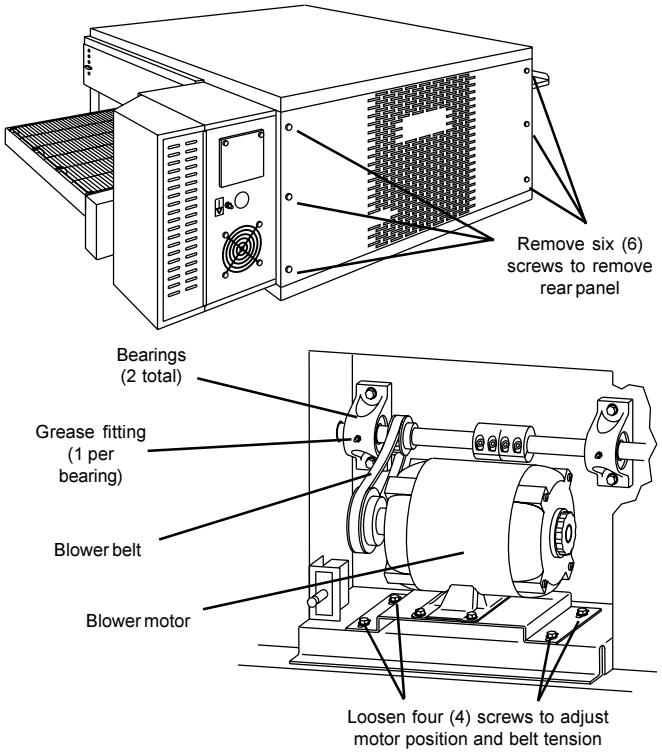

IV. MAINTENANCE - EVERY 6 MONTHS

A. Check that the oven is cool and the power is disconnected, as described in the warning at the beginning of this Section.

B. Check for excessive wear on the conveyor drive motor brushes. The brushes should be replaced if they have worn to less than 6.4mm in length. Be sure to replace the brushes in exactly the same position.

C. Check the conveyor drive shaft bushings and spacers. Replace the components if they are worn.

V. KEY SPARE PARTS KIT - Available separately. See Figure 4-12.

Item	*Qty.*	*Part No.*	*Description*
1	1	44695	Conveyor Drive Motor w/Pickup Assy.
2	2	30153	Drive Motor Brushes
3	1	37337	Kit, Conveyor Speed Controller
4	1	33985	Kit, Thermocouple
5	1	44687	Motor, Blower
6	1	44685	Belt, Blower
7	1	33983	High Limit Control Module, 230V
8	1	97525	Axial Cooling Fan, 230V
9	1	39530	Air Switch, 230V
ELECTRIC OVENS ONLY:			
10	1	44585	Relay and Heat Sink Assembly
11	3	44701	Fuse, 60A
12	1	45281	Heating Element, 380V 8 kW
13	1	44783	Kit, Digital Temperature Controller
GAS OVENS ONLY:			
14	1	36939	Kit, Digital Temperature Controller
15	1	45668	Gas Control Valve
16	1	45669	Ignition Module
17	1	45770	Ignitor
18	1	45771	Flame Probe
19	1	31651	Amplifier Board

Fig. 4-12 - Key Spare Parts Kit

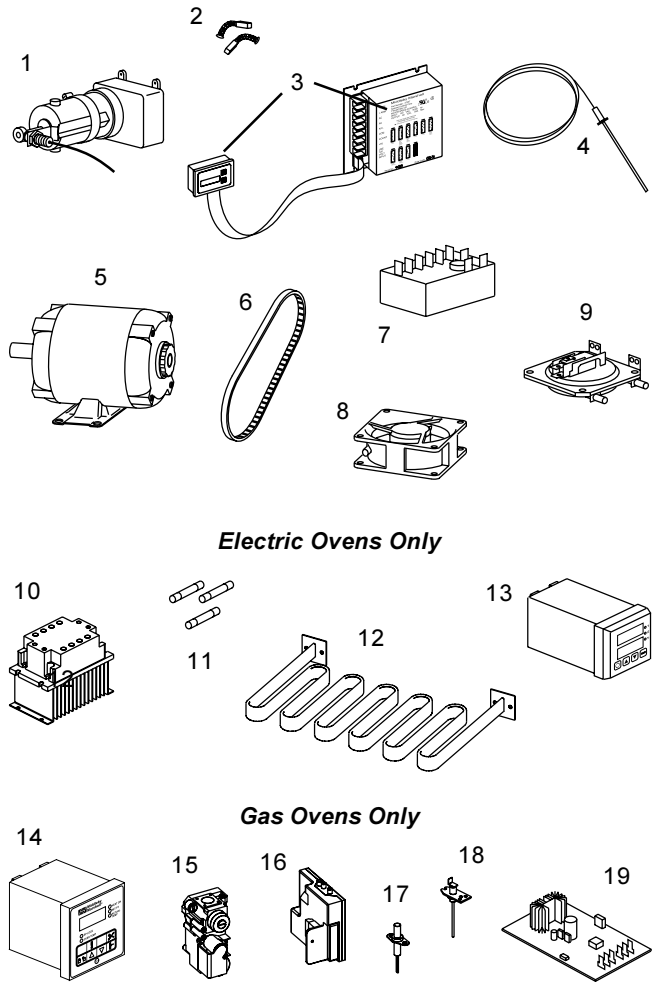

SECTION 5 - ELECTRICAL WIRING DIAGRAMS

Fig. 5-2 - Wiring diagram, PS536 Electric Oven
380V, 50 Hz, 3 Ph (Europe)

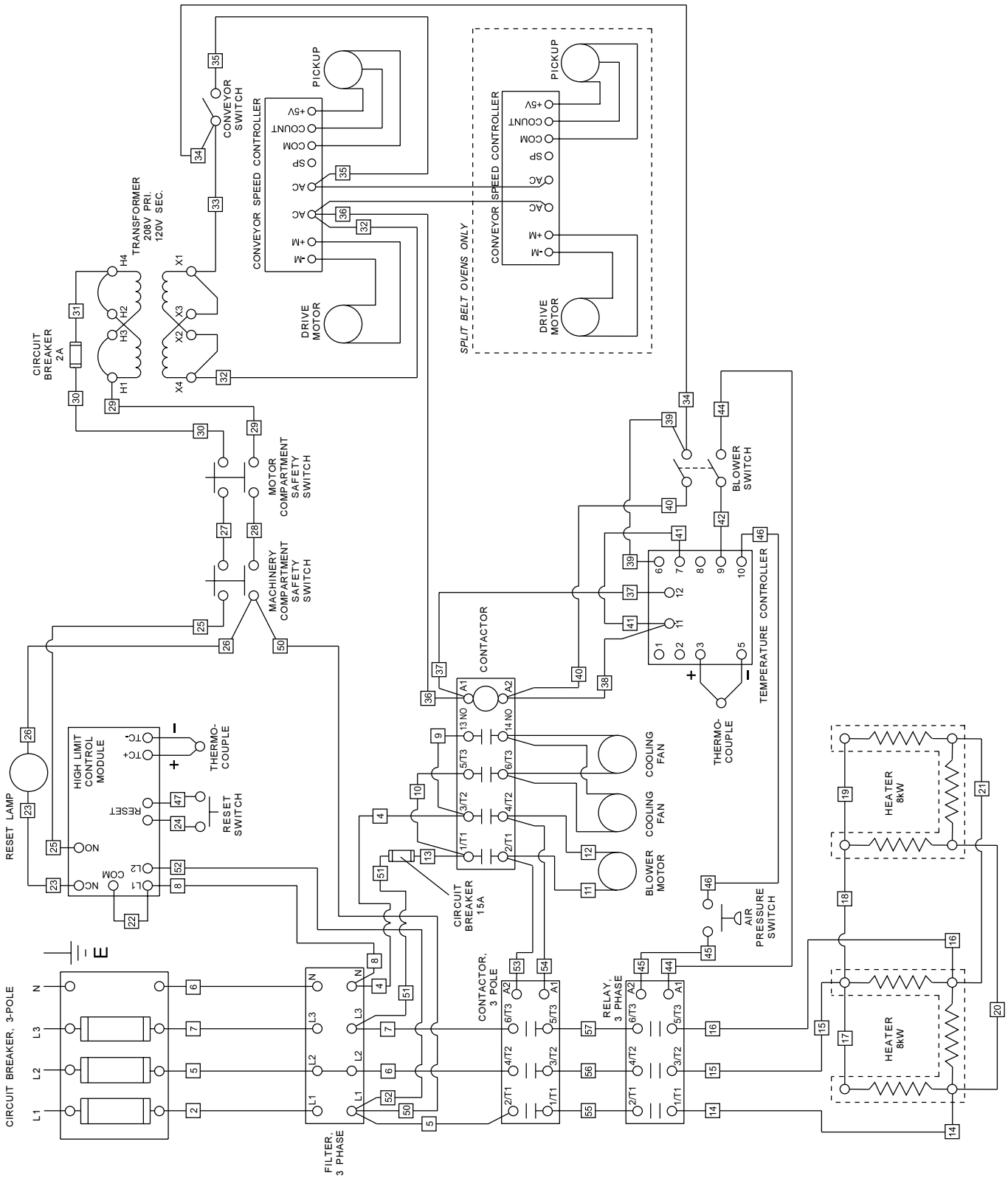

IMPORTANT

An electrical wiring diagram for the oven is also located inside the machinery compartment.

Fig. 5-2 - Wiring diagram, PS536 Gas Oven
220-230V, 50 Hz, 1 Ph (Europe)

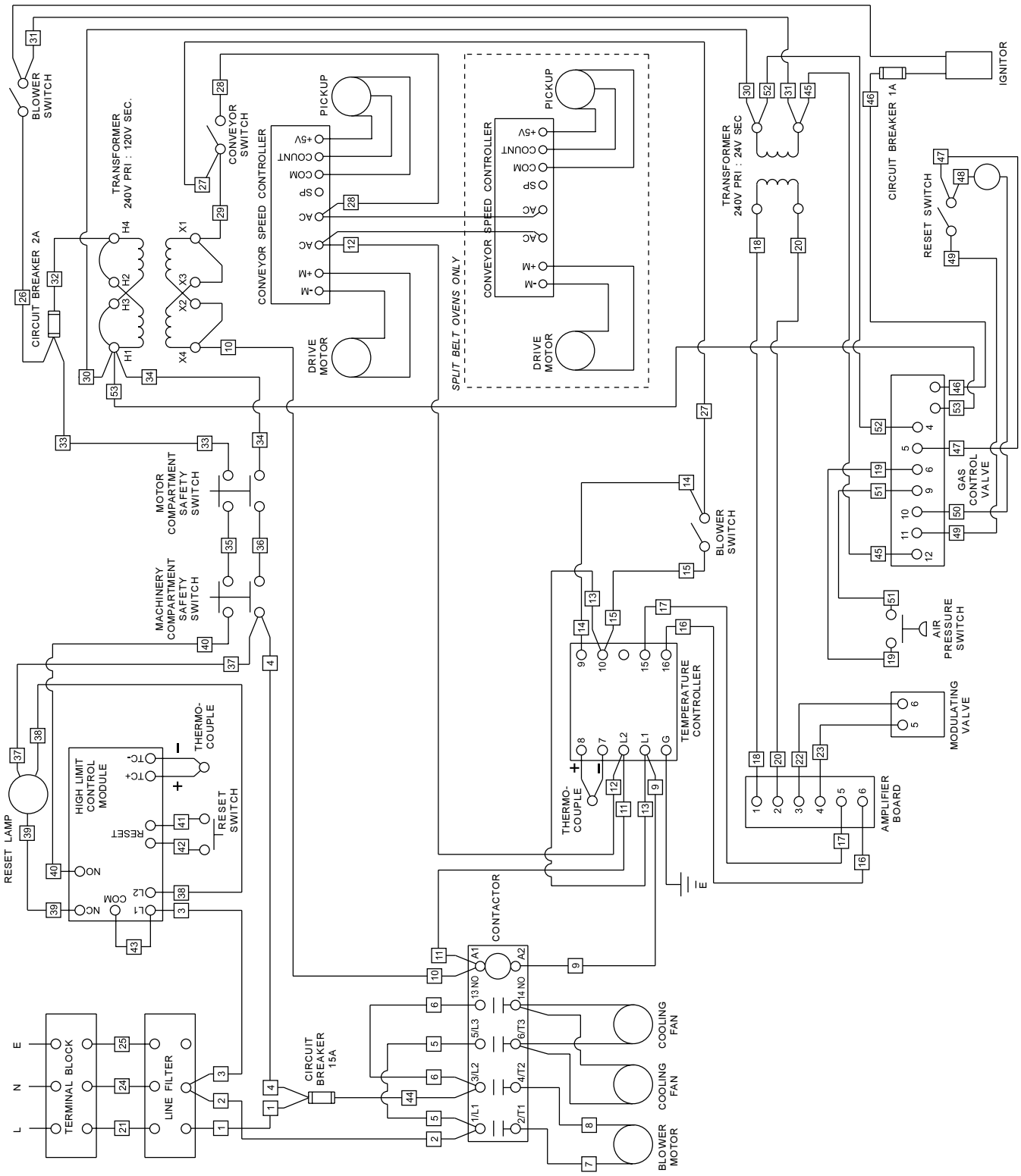

IMPORTANT

An electrical wiring diagram for the oven is also located inside the machinery compartment.

ENGLISH page 1
DEUTSCH Seite 35
FRANÇAIS page 69
ESPAÑOL página 103