Middleby Marshall®

A MIDDLEBY COMPANY

PS870 "WOW" SERIES GAS FIRED:

SPL062506-PF-BD

June 25, 2006

Parts Manual

with Wiring Diagrams for domestic ovens

Serial # Code
First 4 digits - order of production
Fifth digit - model specific
Sixth and Seventh digit - month of production
Eighth and Ninth digit - year of production

Starting Serial # 982150606

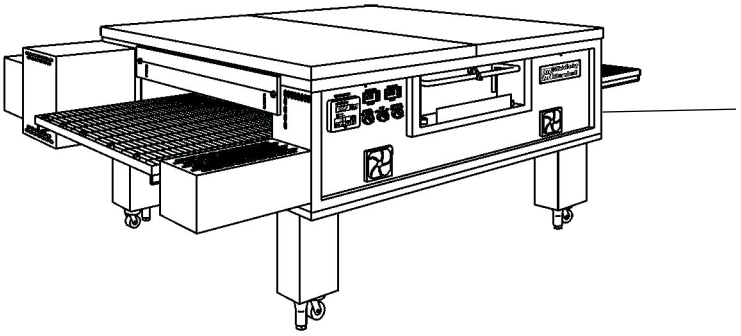

Table of Contents: Page 2

www.middleby.com

email: techsupport@middleby.com

1-847-741-3300 fax 1-847-741-4406

©2006 Middleby Marshall Inc.

Table of Contents

Spec Sheet 3
Key Parts 6
Cross Reference of Wiring Diagram Symbols and Part Number(s) 7
View of Installation Kit(s) and Base Kit(s) 8
Parts for Installation Kit(s) and Base Kit(s) 9
View of Oven Panels, End Plugs and Window 10
Parts for Oven Panels, End Plugs and Window 11
View of Gas Piping 12
Parts for Gas Piping 13
View(s) of Burner/Blower Motor Assembly 14
Parts for Burner/Blower Motor Assembly 15
View(s) of Front Control Area(s) 16
Parts for Front Control Area(s) 17
View of Rear Compartment and Blowers (Conveyor Drive End Shown) 18
Parts for Rear Compartment and Blowers (Conveyor Drive End Shown) 19
View of “Single” Belt Conveyor 20
Parts for “Single” Belt Conveyor 21
View of “Split” Belt Conveyor 22
Parts for “Split” Belt Conveyor 23
Standard Finger Configuration 57138C and Part Numbers 24
Wiring Diagram, G208-240, 50/60Hz, 1 Phase 54745 Rev. G 25

Middleby® Marshall

CONVEYORS OF EXCELLENCE

A/A File No.: _____

Item No.: _____

PS870 WOW OVEN

Direct Gas Fired Conveyor Oven

Impingement PLUS!

energy management system

PATENTS PENDING

Principle

Middleby Marshall PS Series Conveyor ovens bake both faster and at a lower temperature than other ovens. Patented vertical columns of hot air move heat aerodynamically instead of using high temperatures. The streams of hot air remove the boundary layers of cool heavy air which tend to insulate the product. This gives very rapid baking without burning. All PS870WOW ovens are designed to cook pizza at 5:45 to 6:45 minutes belt speed.

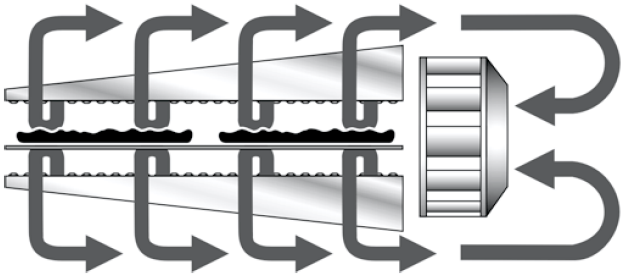

Standard Features

- **Impingement PLUS!** low oven profile and dual air return
- **Patented EMS Energy Management System** reduces gas consumption and increases cooking efficiency
- 70”/1778mm-long cooking chamber
- 32”/813mm-wide, 106”/2692mm-long conveyor belt

Optional Features

- Unique design allows the PS870 to bake all menu items at 5:45 to 6:45 minutes belt speed.

Energy Management System

The PS870 features an Energy Management System (EMS) that automatically reduces gas consumption. Touch Screen Control can be programmed in one energy saving mode.

Cleanability

PS870 ovens are designed for easy cleaning. Removable parts include: crumb pans, end panels, air fingers, and a folding conveyor belt assembly.

Easily Serviced

Control compartment is designed for quick and easy access. All electrical controls are door-mounted.

Warranty

All PS870 models have a one year parts and labor warranty. Oven start-up and demonstration are included at no additional charge (USA only).

Ventilation

For installation under a ventilation hood only.

Middleby® Marshall

A MIDDLEBY COMPANY

1400 Toastmaster Drive
Elgin, Illinois 60120 USA
(847) 741-3300 Fax: (847) 741-0015
www.middleby.com

PS870-2 Double Oven with 15" (381mm) leg extensions

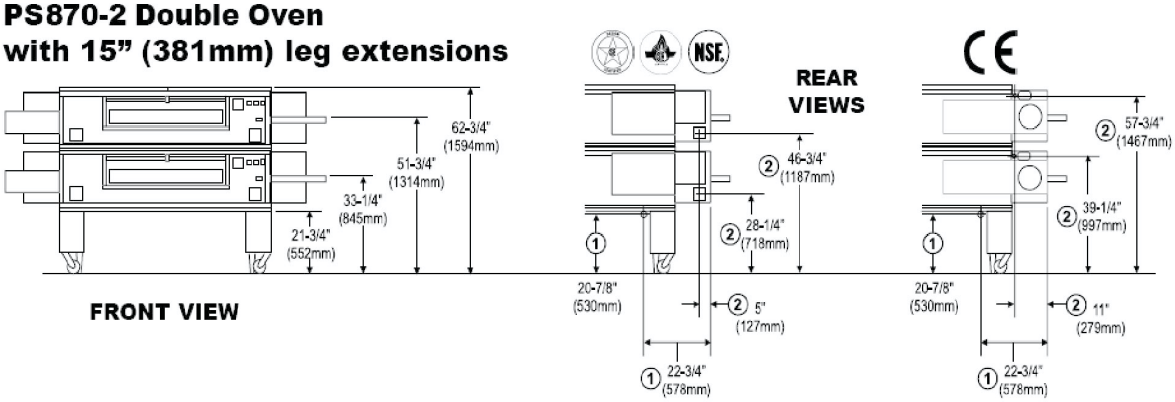

PS870-3 Triple Oven with 4" (102mm) leg extensions

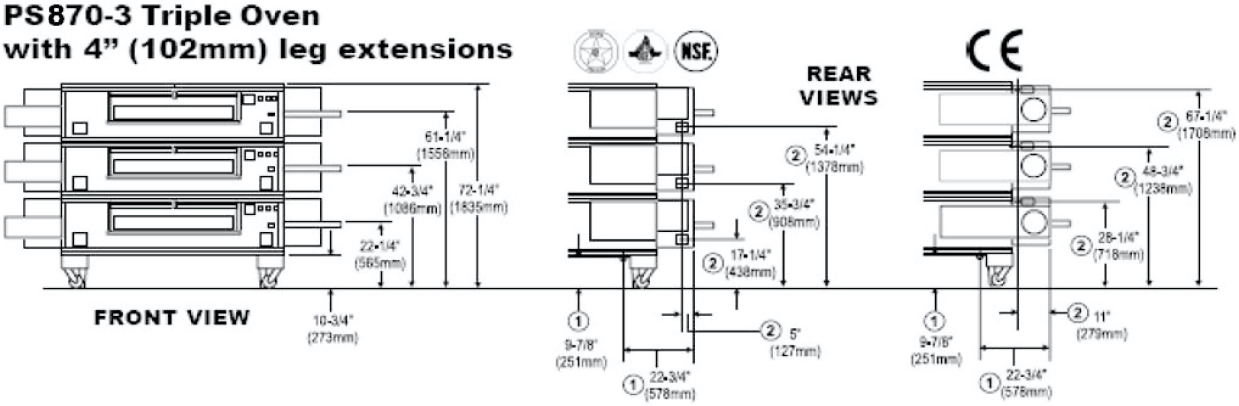

1400 Toastmaster Drive, Elgin, IL 60120-9272, USA • (847) 741-3300 • Fax: (847) 741-0015
www.middleby.com

Printed in U.S.A
Form 4510

Middleby® Marshall
CONVEYORS OF EXCELLENCE

PS870 Series
Direct Gas Fired Conveyor Oven

RECOMMENDED MINIMUM CLEARANCES

Rear of oven to wall	Right side of oven to wall	Left side of oven to wall
0" (0mm)	0" (0mm)	0" (0mm)

GENERAL INFORMATION

Model	Heating Zone	Baking Area	Belt Length	Belt Width	Oven Depth	Height	Max. Operating Temp.	Bake Time Range	Ship Wt.	Ship Cube
PS870-1 with 19" (483mm) leg extensions	70" 1778mm	15.5 sq. ft. 1.44m^2	106" 2692mm	32" 813mm	61-3/4" 1568mm	48-1/4" 1226mm	550°F 288°C	5:45 6:45	1750 lbs. 795kg	160 ft.^{3} 4.5m^3
PS870-2 with 15" (381mm) leg extensions	140" 3556mm	31 sq. ft. 2.88m^2	106" 2692mm	32" 813mm	61-3/4" 1568mm	62-3/4" 1594mm	550°F 288°C	5:45 6:45	3500 lbs. 1589kg	320 ft.^{3} 9.0m^3
PS870-3 with 4" (102mm) leg extensions	210" 5334mm	46.5 sq. ft. 4.32m^2	106" 2692mm	32" 813mm	61-3/4" 1568mm	72-1/4" 1835mm	550°F 288°C	5:45 6:45	5250 lbs. 2384kg	480 ft.^{3} 13.5m^3

ELECTRICAL SPECIFICATIONS / Max Current Draw at Startup / Breakers

Model	Version	Voltage	Phase/Freq.	Supply	Amps	Breakers
PS870	ETL c us ETL	208-240V	1/60 Hz	3 pole, 3 wire (2 hot, 1 gnd)	20A*	As per local codes

The average current draw during operation is significantly lower.

GAS SUPPLY SPECIFICATIONS

	Min. Gas Pipe Size	Supply Gas Pressure	Rated Heat Input
Natural Gas	2" (50.8mm) main One 1-1/4" (12.7mm) NPT branch to lower oven cavity with individual full-flow shutoff valve	6-12" W.C. (14.9-29.9 mbar)	175,000 BTU (44.1 kcal, 51.3 kW/hr.) per oven cavity
Propane Gas	2" (50.8mm) main One 1-1/4" (12.7mm) NPT branch to lower oven cavity with individual full-flow shutoff valve	11-14" W.C. (27.4-34.9 mbar)	175,000 BTU (44.1 kcal, 51.3 kW/hr.) per oven cavity

* *The gas supply pressures shown are for ovens installed in North America. The required gas supply pressures of other locations are dependent on the local gas type and on all applicable local codes.*

ALL SPECIFICATIONS SUBJECT TO CHANGE WITHOUT NOTICE.

Middleby® Marshall
CONVEYORS OF EXCELLENCE

THE MIDDLEBY CORPORATION
THE BRAND BEHIND THE BRANDS

1400 Toastmaster Drive, Elgin, IL 60120-9272, USA • (847) 741-3300 • Fax: (847) 741-0015
www.middleby.com

Printed in U.S.A
Form 4510

KEY PARTS

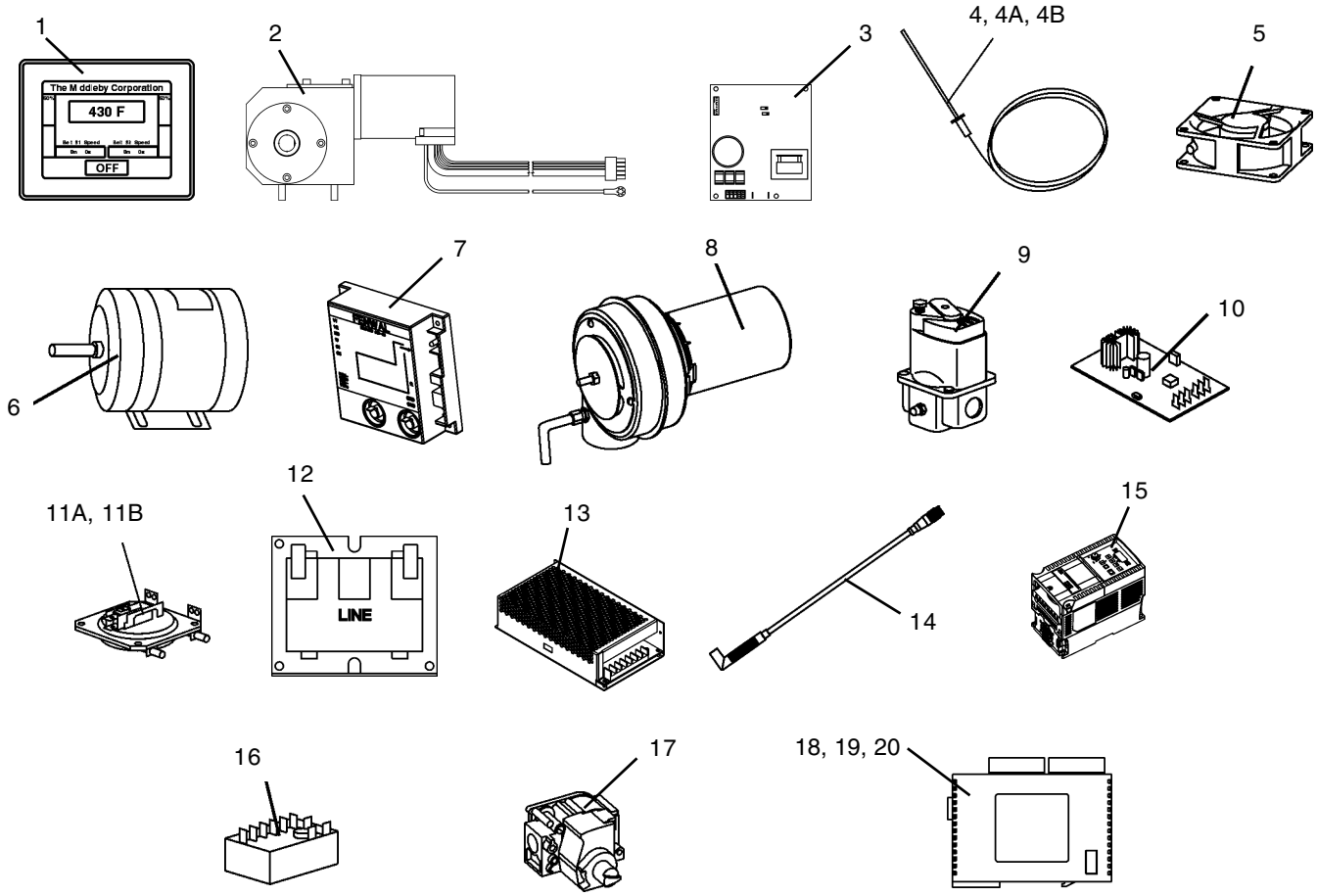

ITEM	PART NO.	DESCRIPTION	QUANTITY
1	59081	Display, Touch Screen	1
2	58678	Drive Motor, Conveyor, 1400:1, 130VDC	1 or 2
3	58679	Controller, Conveyor	1 or 2
4	33812-7	Thermocouple, 9-1/2" Temp. Control	5
4A	33812-8	Thermocouple, 2.5" Control Compartment	1
4B	33812-1	Thermocouple, 6″ High Limit (33984)	1
5	M9616	Cooling Fan, 6", 24VDC	2
6	57288	Blower Motor, 2 hp, 1725 RPM	2
7	54727	Ignition Module, Dual	1
8	M9887	Burner/Blower Motor, 24VDC	1
9	41647	Modulating Gas Valve, 1/2"	2
10	31651	Amplifier Board	2
11A	50610	Air Switch, Rear Blower	2
11B	57141	Air Switch, Burner/Blower Motor, Front	1
12	32108	Transformer, 240V/24V, 65VA	2
13	M9608	Power Supply, 24VDC	1
14	59112	Photocell	2
15	59168	Invertor, 2 hp	2
16	33983	Hi Limit Control Module	1
17	54724	Gas Valve, Main, 1/2" Natural Gas	1
18	59109	Control Module, Digital, C14RS, Left	1
19	58668	Thermocouple Module, Digital, TC4, Middle	1
20	58669	Convertor Module, Digital, A041, Right	1

CROSS REFERENCE of WIRING DIAGRAM SYMBOLS and PART NUMBERS

- Air Switch 1 -Rear Right 50610
- Air Switch 2 - Rear Left 50610
- Air Switch 3 - Front Right 57141

- Blower Motor–Left 57288
- Blower Motor–Right 57288

- Burner Blower Motor M9887

- Circuit Breakers
- CB1 - 15A 45037
- CB2 - 15A 45037
- CB3 - 15A 45037
- CB4 - 15A 45037
- CB5 - 3A 45036
- CB6 - 3A 45036
- CB7 - 1A 45644
- CB8 - 1A 45644

- Cooling Fan LH M9616
- Cooling Fan RH M9616

- Controller 1 DC 58679
- Controller 1 DC (split belt) 58679

- Conveyor Motor 58678
- Conveyor Motor (split belt) 58678

- Dual Burner 54719

- Converter Module - Digital A041, Right 58669

- Control Module - Digital C14RS-A, Left 59109

- Thermocouple Module - Digital TC4, Middle 58668

- Gas Valve 54724

- Green Light (Reset Button) 35145

- GT30 Display 59081

- High Limit 33983

- Ignition Module, Dual 54727

- Inverter - 1 Left, 2HP 59168
- Inverter - 2 Right, 2HP 59168

- Switch(es)
- LS1 (LH RR), Momentary 28021-0061
- LS2 (RH RR), Momentary 28021-0061
- LS3 (RH Front), Inter Lock 28021-0047
- LS4 (LH Front), Inter Lock 28021-0047

- Reset Button 35145

- Mod Valve 1 41647
- Mod Valve 2 41647

- Photocell 1 Entrance 59112
- Photocell 2 Exit 59112

- Power Supply M9608

- Relay 59132

- Signal Amplifier 1 31651
- Signal Amplifier 2 31651

- TB1 RR LT (3 Pole) 44390
- TB2 RR LT (3 Pole) 44390
- TB3 RR RT (3 Pole) 44390
- TB4 RR LT (8 Pole) 31047
- TB5 Comp Brkt (4 Pole) M0593
- TB6 Comp Brkt (4 Pole) M0593

- TC1 - 6″ High Limit (33984) 33812-1
- TC2 - 9-1/2", Oven Temp. 33812-7
- TC3 - 9-1/2", Oven Temp. 33812-7
- TC4 - 2.5", Control Compartment 33812-8

- XFMR1 - 240V/24V 65 VA 32108
- XFMR2 - 240V/24V 65 VA 32108

Wiring Diagram on Page 25.

View of INSTALLATION KIT (Part Number 59057)

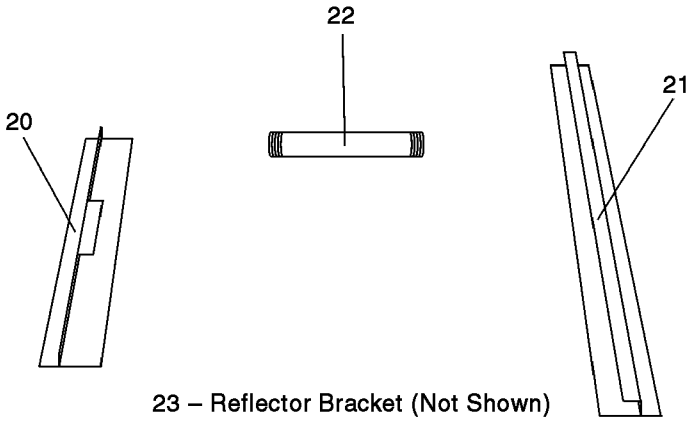

View of BASE PAD KIT

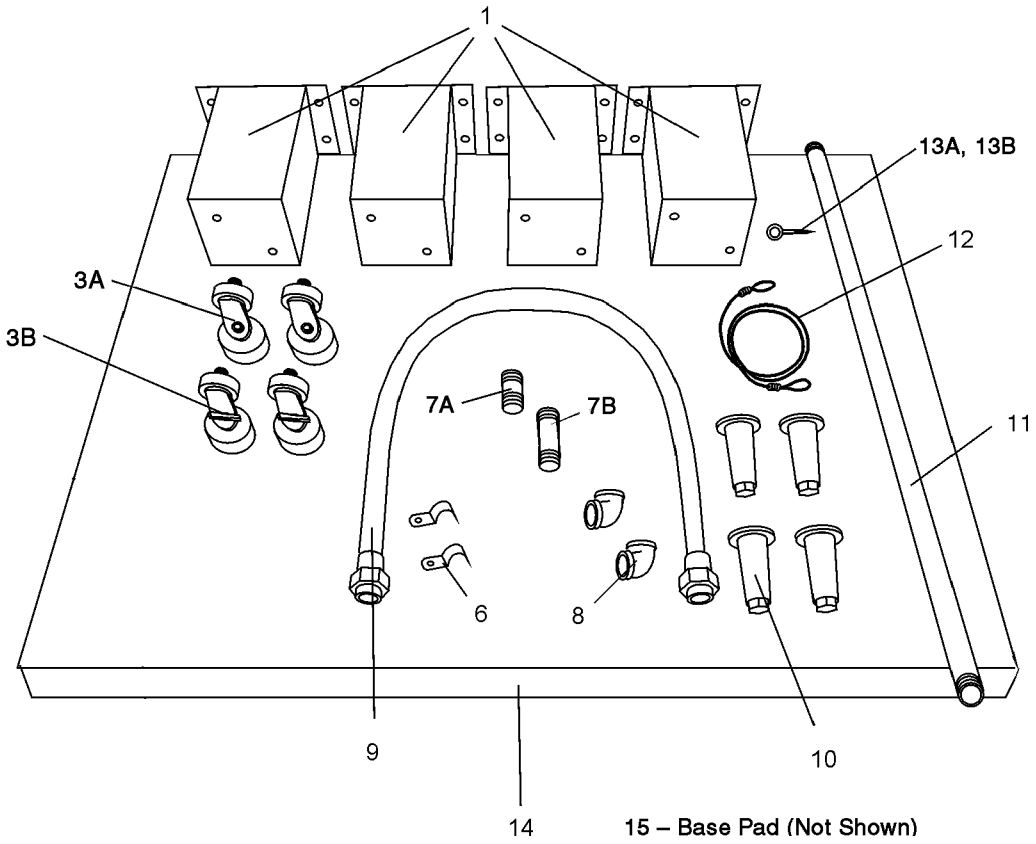

Parts for INSTALLATION KIT (Part Number 59057)

ITEM	QTY. – SGL. BELT	P/N	DESCRIPTION
20	1	55028	CONVEYOR REAR STOP, 18″
21	1	55027	CONVEYOR END STOP, 29-1/4″
22	1	33120-0054	GAS PIPE NIPPLE, 1-1/4″ X 6″
23	1	59226	BRACKET, REFLECTOR, R.H.

ITEM	QTY. SGL. OVEN 19″ LEGS 49026-0009	QTY. SGL./DBL. OVEN/W 15″ LEGS 49026-0011	QTY. TRIPLE OVEN 49026-0012	P/N	DESCRIPTION
1A	4	—	—	37210-0060	LEG, 19″ (483mm) (OPTIONAL)
1C	—	4	—	37210-0057	LEG, 15″ (381mm)
1D	—	—	4	39684	LEG, 4″ (102mm) (43158, set of 4)
3A	2	2	2	37115-0102	CASTER, SWIVEL WITH 3/4″ STUD
3B	2	2	2	58930	CASTER, SWIVEL WITH BRAKE
6	2	2	2	27271-0004	PIPE CLAMP, 1-1/2″
7A	2	2	2	33120-0055	NIPPLE, 1-1/4″ DIA. X 3″ L, NPT
7B	1	1	1	33120-0054	PIPE, 1-1/4″ DIA. X 6″ L
8	2	2	2	23122-0007	ELBOW, 90°, 1-1/4″ DIA.
9	1	1	1	22361-0003	GAS HOSE, 1-1/4″ DIA. x 72″ L
10	4	4	4	22450-0028	LEG, 6″ (152mm) ADJUATABLE WITH 3/4″ STUD
11	1	1	1	33120-0056	GAS PIPE, 1-1/4″ DIA. x 54″ L
12	1	1	1	22450-0253	RESTRAINT CABLE, 60″ (1524mm)
13A	1	1	1	21392-0005	EYE BOLT, WALL
13B	1	1	1	37699	EYE BOLT, BASE PAD
14	2	2	2	35210-0656	TOP COVER (RIGHT OR LEFT)
NOT SHOWN:					
15	1	1	1	37210-0055	BASE PAD
16	2	2	2	21292-0001	SCREW, TEKS HWH #2PT #10-16 x 3/4″
17	16	16	—	21216-0018	BOLT, HEX CAP 1/2″-13 x 1-1/4″
18	16	16	—	21416-0003	FLAT WASHER, 1/2″
19	16	16	—	21426-0004	LOCK WASHER, 1/2″
20	8	8	8	59156	SCREW, TOP COVER, 1-1/2″ LONG

View of PANELS, END PLUGS and WINDOW

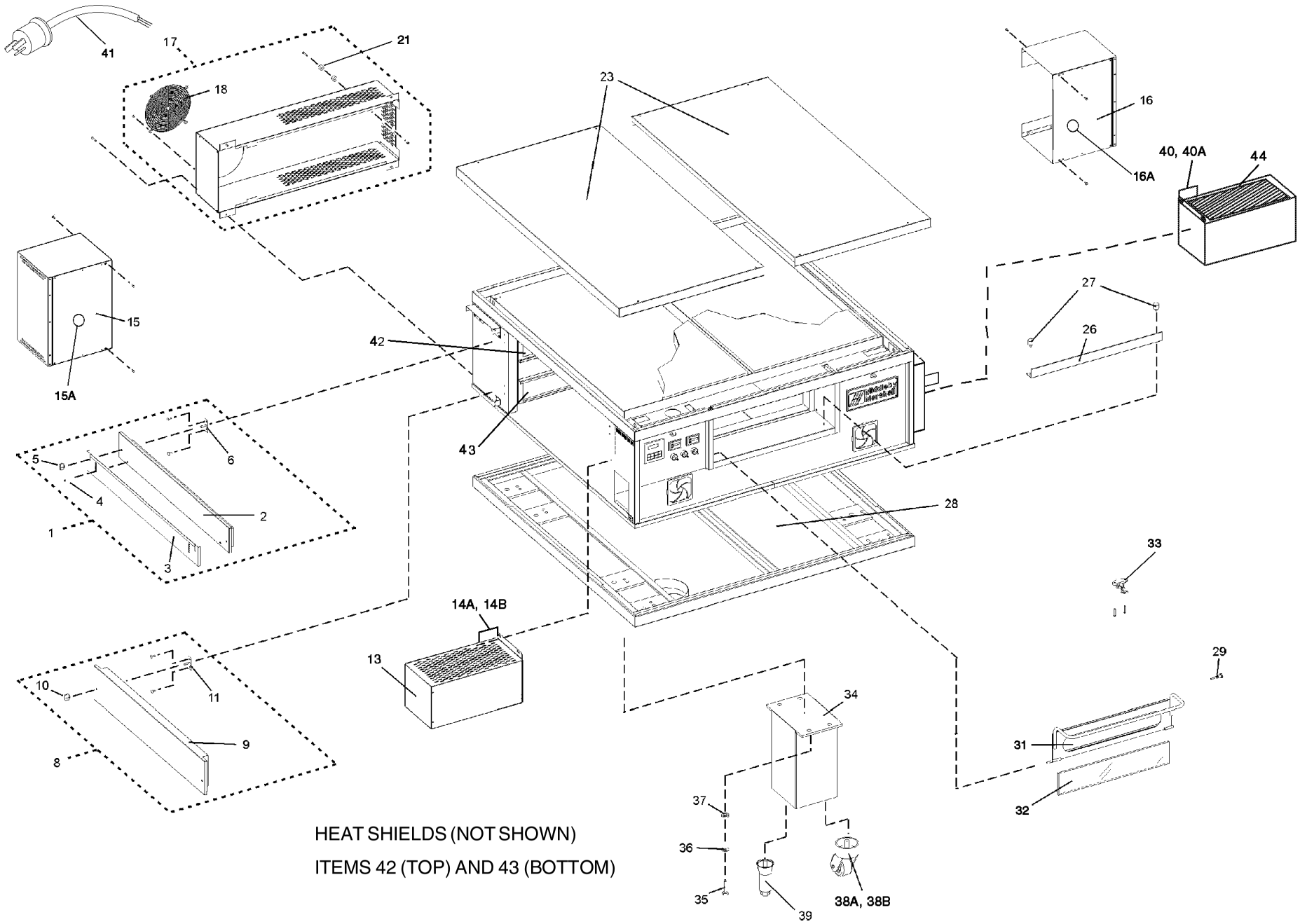

HEAT SHIELDS (NOT SHOWN)

ITEMS 42 (TOP) AND 43 (BOTTOM)

Parts for PANELS, END PLUGS and WINDOW

ITEM	QTY.	P/N	DESCRIPTION
1	1	39539	ASSY, UPPER END PLUG *(INC. ITEMS 2-6)*
2	2	41778	WELDMENT, UPPER END PLUG
3	2	50834	EYEBROW
4	8	220295	SCREW, “AB” HEX WSHR HD #10 X 3/4″
5	4	36452	WING NUT, 1/4″-20 W/PLASTIC GRIP
6	4	41708	PLATE, END PLUG MOUNTING
8	2	39569	ASSY, LOWER END PLUG *(INC. ITEMS 9-11)*
9	2	41779	WELDMENT, LOWER END PLUG PS500
10	4	36452	WING NUT, 1/4″-20 W/PLASTIC GRIP
11	4	41708	PLATE, END PLUG MOUNTING
13	1	57501	ASSEMBLY, DRIVE MOTOR SHROUD
14A	1	59098	BRACKET FOR REFLECTOR
14B	1	59099	REFLECTOR
15	1	57286	ASSEMBLY, LEFT MOTOR SHROUD
15A	1	58758	GLASS, 1.25″ x 2″ x 0.25″
16	1	57293	ASSEMBLY, RIGHT MOTOR SHROUD
16A	1	58758	GLASS, 1.25″ x 2″ x 0.25″
17	2	54715	ASSEMBLY, REAR SHROUD *(INC. ITEM 18 & 19)*
18	2	31765	GRILL, COOLING FAN
21	2	48522	SPACER
23	2	35210-0656	TOP COVER
26	1	42488	WINDOW GUARD
27	2	30927	BUMPER, WINDOW

ITEM	QTY.	P/N	DESCRIPTION
28	1	37210-0055	BASE PAD
29	2	34121-0003	SCREW, WINDOW PIVOT
31	1	45012	ASSEMBLY, WINDOW/LATCH *(INC. ITEM 32 & 33)*
32	1	41597	GLASS, WINDOW, PRE-CUT, 3-1/2″ X 20″
33	1	45087	LATCH
34A	4	37210-0060	LEG, 19″
34B	4	37210-0057	LEG, 15″
34C	4	39684	LEG, 4″
35	16	21216-0018	BOLT, HEX CAP 1/2″-13 X 1-1/4″ - SINGLE & DOUBLE OVENS
36	16	21426-0004	LOCKWASHER, 1/2″ - SGL & DBL OVENS
37	16	21416-0003	FLAT WASHER, 1/2″ - SGL & DBL OVENS
38A	2	37115-0102	CASTER, SWIVEL WITH 3/4″ STUD - SINGLE, DOUBLE, & TRIPLE OVENS
38B	2	58930	CASTER, SWIVEL WITH BRAKE
39	4	22450-0028	LEG, 6″ (152mm) ADJUSTABLE WITH 3/4″ STUD - SINGLE, DOUBLE, & TRIPLE OVENS
40	1	59098	BRACKET, REFLECTOR, RIGHT HAND
40A	1	59099	REFLECTOR
41	1	49975	CORD & PLUG, L6-20P
42	2	59148	HEAT SHIELD, TOP.
43	2	59149	HEAT SHIELD, BOTTOM
44	1	59226	ASSEMBLY, SHROUD, RIGHT HAND

View of GAS PIPING

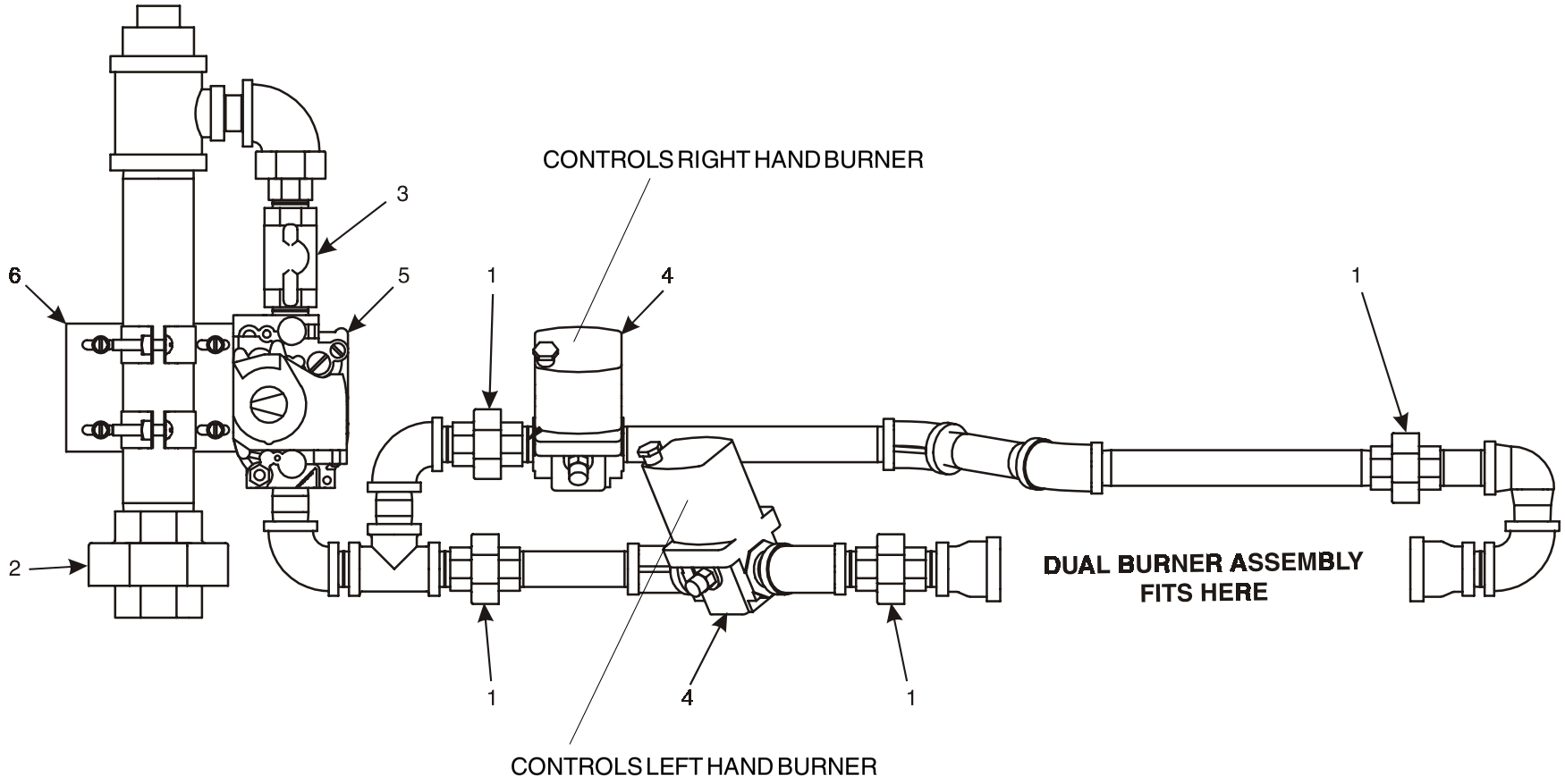

Parts for GAS PIPING

ITEM	QTY.	P/N	DESCRIPTION
1	4	23051-0003	UNION, 1/2″
2	1	23051-0012	UNION, 1-1/4″
3	1	23115-0009	MANUAL ON/OFF GAS VALVE, 1/2″, BALL
4	2	41647	MODULATING GAS VALVE, 1/2″
5	1	54724	VALVE, COMBINATION, 1/2″
5A	1	28092-0018	SPRING FOR LP CONVERSION
6	1	42410-0016	BRACKET/CLAMP

View of BURNER/BLOWER MOTOR ASSEMBLY

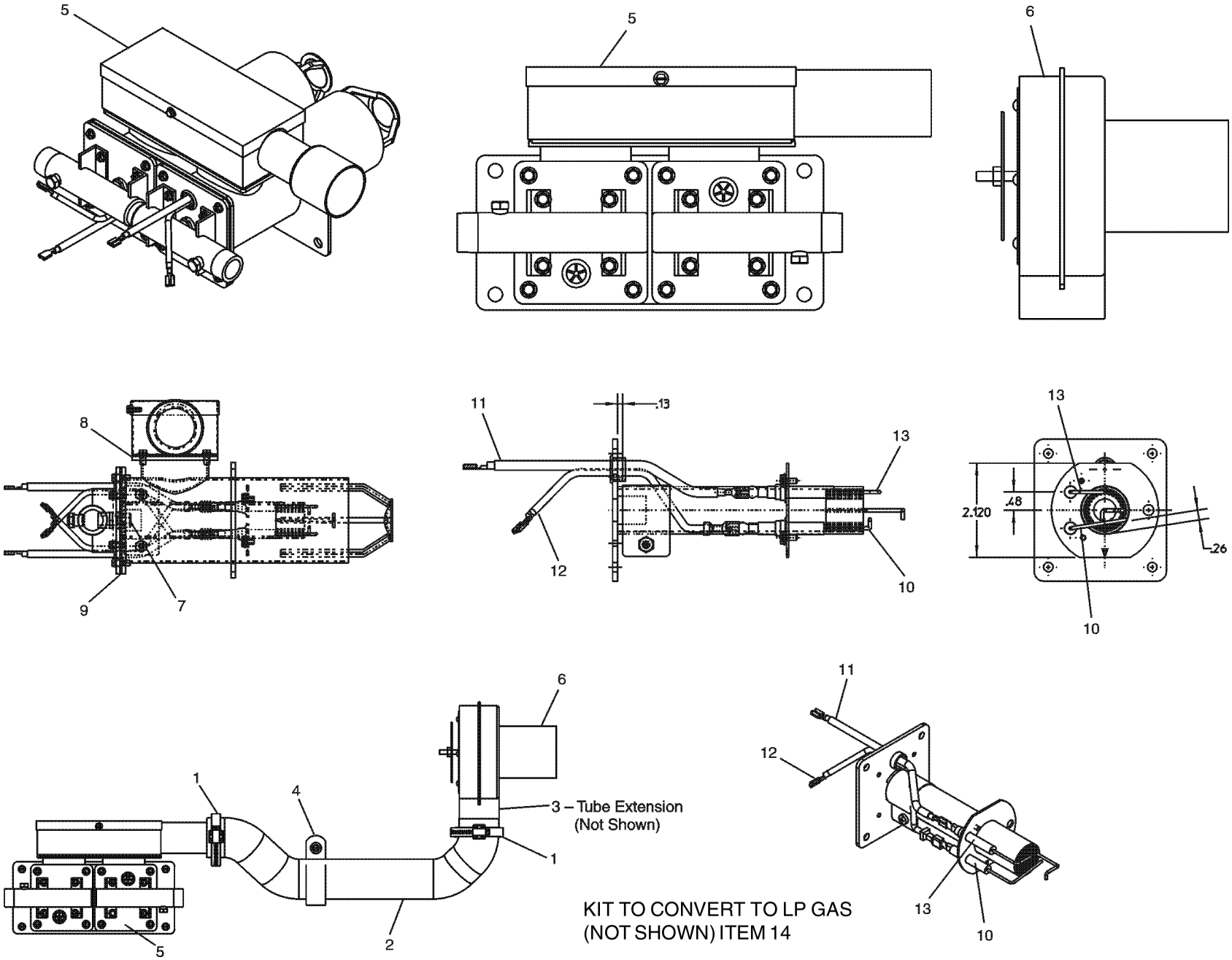

KIT TO CONVERT TO LP GAS
(NOT SHOWN) ITEM 14

Parts for BURNER/BLOWER MOTOR ASSEMBLY

ITEM	QTY.	P/N	DESCRIPTION
1	2	22450-0259	CLAMP, DUCT
2	1	22450-0255	DUCT
3	1	35210-0053	TUBE EXTENSION *(Not Shown)*
4	1	58754	CLAMP
5	1	54719	DUAL ASSEMBLY BURNER
6	1	M9887	BURNER/BLOWER MOTOR, 24V DC
7	2	Contact Factory	ORIFICE, NATURAL GAS, .173, #17
8	1	Contact Factory	GASKET, AIR INTAKE
9	1	Contact Factory	GASKET, DUAL VERTURE
10	2	58833	ELECTRODE, FLAME SENSOR
11	2	58836	WIRE, IGNITION, 27" LONG, 5mm
12	2	58835	WIRE, FLAME SENSOR, 36″ LONG
13	2	58834	IGNITOR, ELECTRODE
14	1	59075	KIT TO CONVERT TO LP
14A	2	59074	ORIFICE, LP, .107
14B	1	28092-0018	SPRINGFOR GAS VALVE
15	1	Contact Factory	KIT TO CONVERT TO NAT GAS

View(s) of FRONT CONTROL ARES(s)

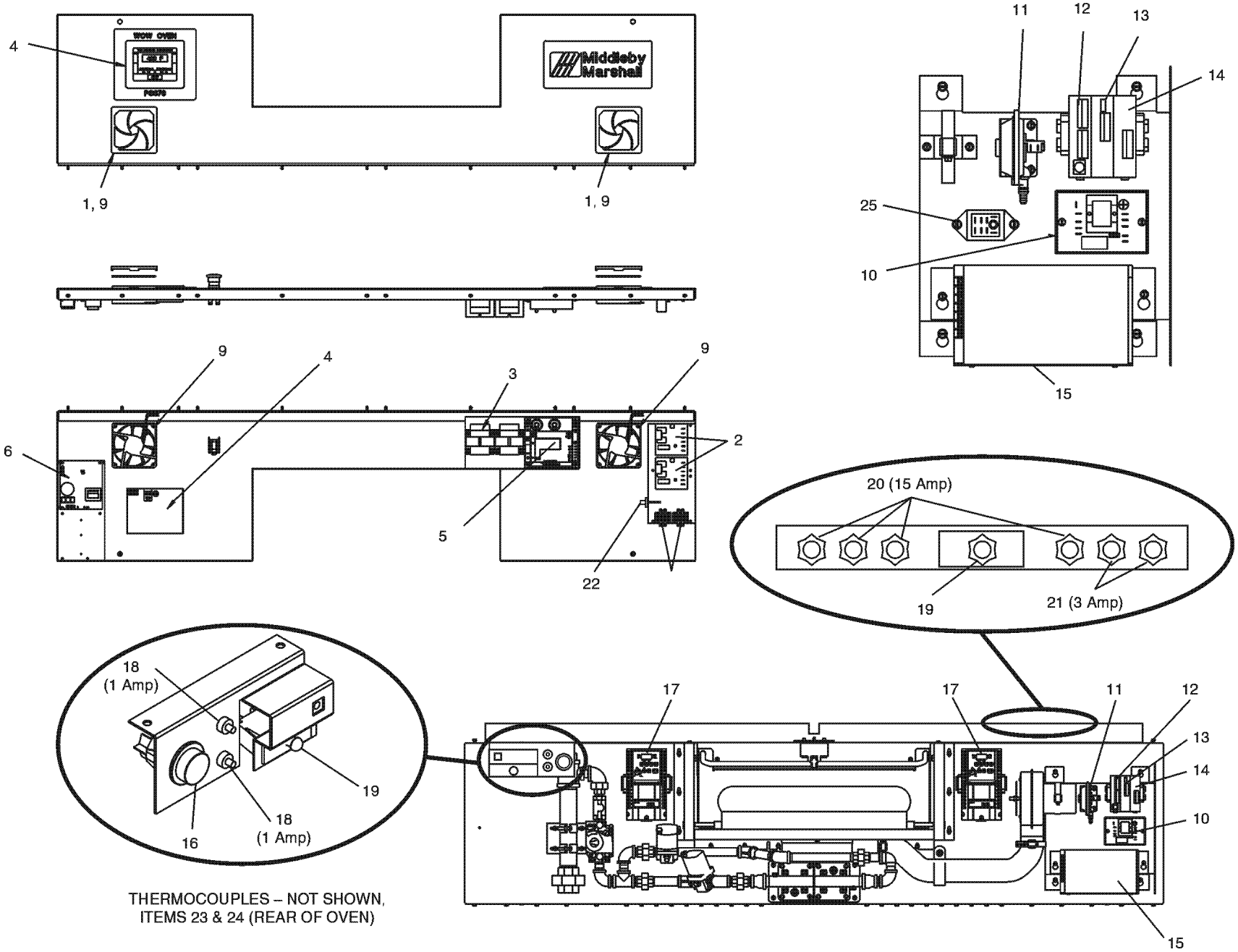

Parts for FRONT CONTROL ARES(s)

ITEM	QTY.	P/N	DESCRIPTION
1	2	310-2458	FILTER/GUARD, FAN
2	2	31651	AMPLIFIER BOARD
3	2	32108	TRANSFORMER, 240/24V, 65VA
4	1	59081	TOUCH SCREEN DISPLAY
5	1	54727	DUAL IGNITION MODULE
6	1or 2	58679	CONTROLLER, CONVEYOR
8	2	M0593	TERMINAL BLOCK, 2-POLE
9	2	M9616	COOLING FAN, 24VDC
10	1	33983	HI-LIMIT CONTROL
11	1	57141	AIR SWITCH, FRONT, BURNER/BLOWER
12	1	59109	CONTROL, (LEFT-HAND), DIGITAL, C14RS
13	1	58668	THERMOCOUPLE (MIDDLE), CONTROL, TC4
14	1	58669	CONVERTER, (RIGHT-HAND), A041
15	1	M9608	POWER SUPPLY, 24VDC
16	1	35145	RESET SWITCH W/GREEN LIGHT, HI-LIMIT
17	2	59168	INVERTOR
18	2	45644	CIRCUIT BREAKER, 1 AMP
19	2	28021-0047	SWITCH, INTERLOCK
20	4	45037	CIRCUIT BREAKER, 15 AMP
21	2	45036	CIRCUIT BREAKER, 3 AMP
22	1	33812-8	THERMOCOUPLE, 2.5″ x 60″, CONTROL COMPARTMENT
23	5	33812-7	THERMOCOUPLE, 9-1/2″ x 120″, REAR OF OVEN
24	1	33812-1	THERMOCOUPLE 6″ (HIGH LIMIT) REAR OF OVEN (33984)
25	1	59132	RELAY, DPDT, 24VDC COIL

View(s) of REAR COMPARTMENT AND BLOWER (CONVEYOR DRIVE END SHOWN)

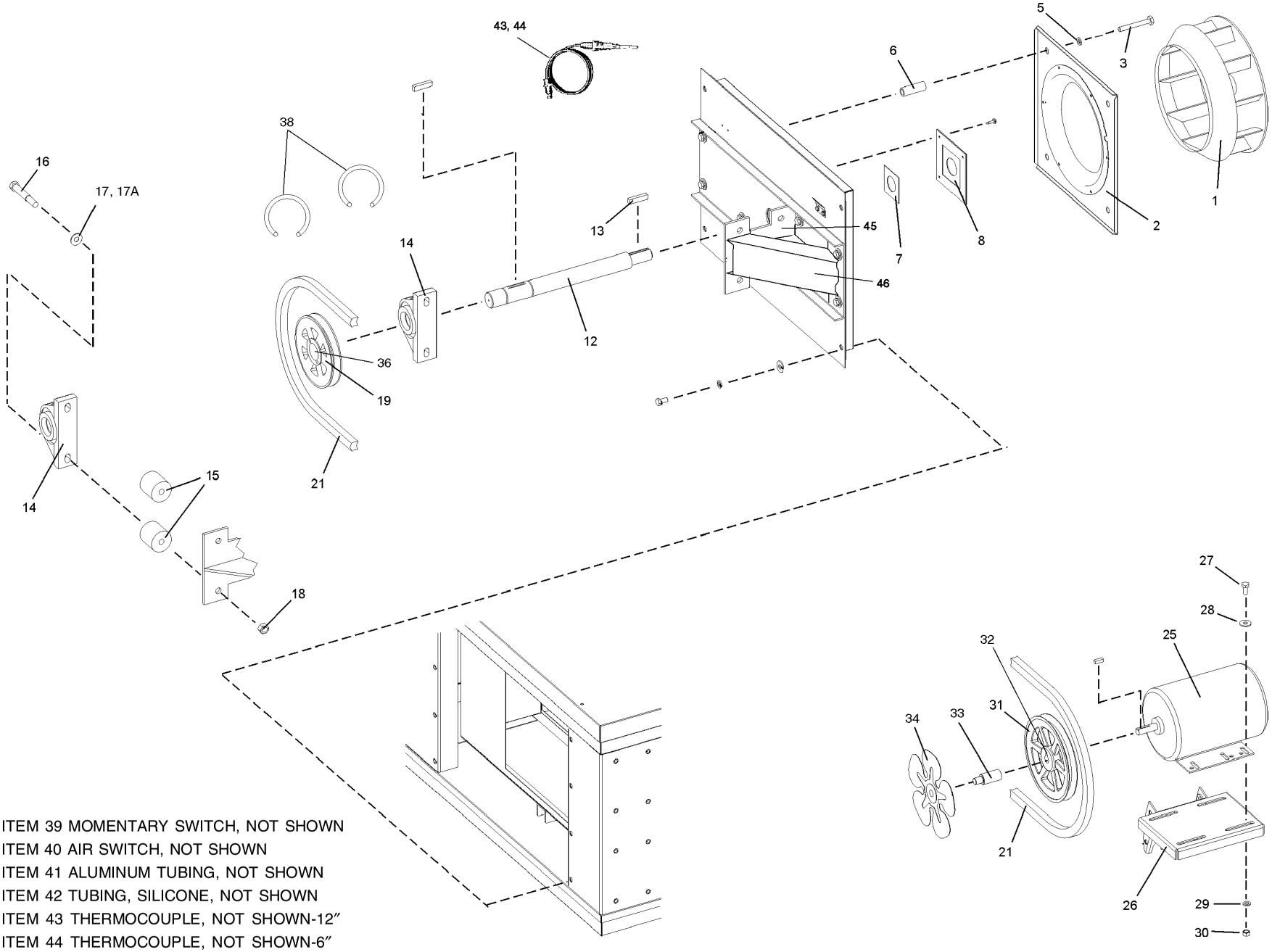

ITEM 39 MOMENTARY SWITCH, NOT SHOWN
ITEM 40 AIR SWITCH, NOT SHOWN
ITEM 41 ALUMINUM TUBING, NOT SHOWN
ITEM 42 TUBING, SILICONE, NOT SHOWN
ITEM 43 THERMOCOUPLE, NOT SHOWN-12″
ITEM 44 THERMOCOUPLE, NOT SHOWN-6″
ITEM 47 PHOTO CELL
ITEM 48 MOUNTING BRACKET, PHOTO CELL

Parts for EACH REAR COMPARTMENT AND BLOWER

ITEM	QTY.	P/N	DESCRIPTION
1A	1	22521-0005	BLOWER WHEEL, IDLER END
1B	1	22521-0006	BLOWER WHEEL, CONVEYOR DRIVE END
2	1	37210-0124	PLATE, INLET RING
3	4	21211-0001	SCREW, CAP HEX HD 3/8″-16 x 3″
5	10	21422-0001	LOCKWASHER, SPLIT 3/8″
6	4	35210-0576	SPACER
7	1	35210-0541	SHAFT SEAL, TEFLON
8	1	37210-0101	PLATE, SHAFT SEAL INNER
12	1	57323	SHAFT BLOWER
13	1	35210-0286	KEY, BLOWER WHEEL
14	2	57321	BEARING
15	4	57320	SPACER, BEARING
16	4	2000535	SCREW, CAP HEX HD
17	4	A6235	FLATWASHER, 7/17″
17A	4	21422-0016	LOCKWASHER
18	4	21121-0013	HEX NUT, 1/2″-13
19	1	57295	PULLEY, 5″
21	1	58777	BELT
25	1	57288	MOTOR, BLOWER 2HP
26	1	59133	BRACKET, MOTOR MOUNTING
27	4	6673	SCREW, CAP HEX HD 5/16″-18 x 1″

ITEM	QTY.	P/N	DESCRIPTION
28	4	A3682	LOCKWASHER, SPLIT 5/16″
31	1	57296	PULLEY, 5.6″
32	1	57297	INSERT, 5/8″
33	1	43024	EXTENDER, FAN
34A	1	27399-0008	FAN BLADE, CW, 8″, CONVEYOR DRIVE END
34B	1	27399-0009	FAN BLADE, CCW, 8″, IDLER END
36	1	57298	INSERT, 1-7/16″
37	1	Contact Factory	KEY, 5/8 x 1
38	2	57325	RING
39	1	28021-0061	SWITCH, MOMENTARY
40	1	50610	AIR SWITCH
41	A/R	15125-0002	ALUMINUM TUBING
42	A/R	22450-0297	TUBING, SILICONE
43	5	33812-7	THERMOCOUPLE, 9-1/2″ x 120″, REAR OF OVEN
44	1	33812-1	THERMOCOUPLE 6″ (HIGH LIMIT) (33984)
45	1	41575	MOUNTING BRACKET
46	1	44550	SUPPORT BRACKET
47	1	59112	PHOTO CELL, 24V DC
48	1	59108	MOUNTING BRACKET, PHOTO CELL

View of Single-Belt Conveyor

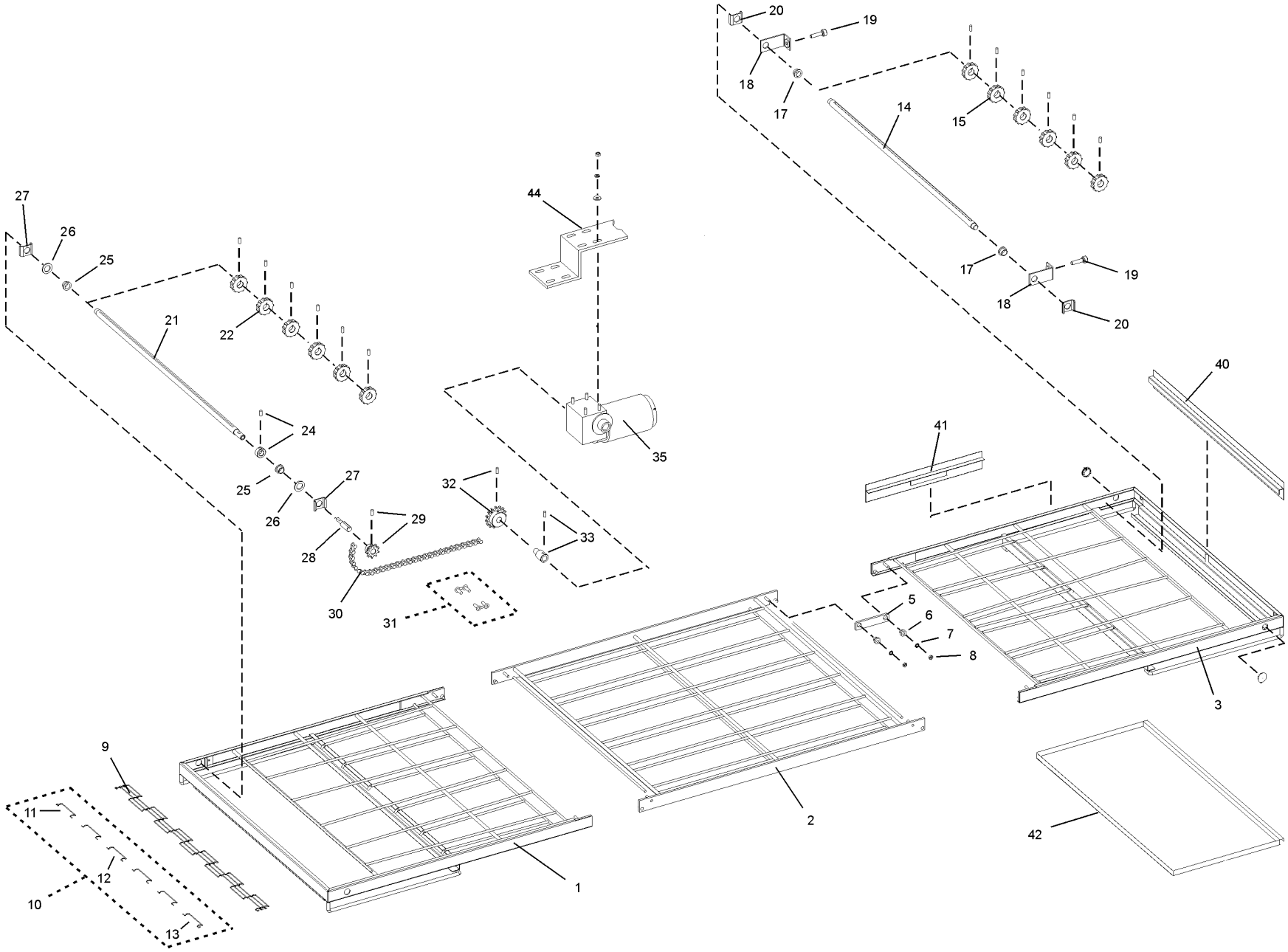

Parts for Single-Belt Conveyor

ITEM	QTY	PART NO.	DESCRIPTION
1	1	37210-0117	WELDMENT, CONVEYOR DRIVE FRAME
2	1	37210-0046	WELDMENT, CONVEYOR CENTER FRAME
3	1	37210-0116	WELDMENT, CONVEYOR IDLER FRAME
5	4	35210-0429	PIVOT PLATE
6	8	35210-0491	BUSHING, CONVEYOR ADJUSTMENT
7	8	F716A8805	WASHER, EXTERNAL TOOTH 1/4″
8	8	21176-0001	LOCKNUT, HEX 1/4″-20
9A	1	22450-0265	CONVEYOR BELT, COMPLETE, 32"W x 206″L
9B	--	33900-0032	CONVEYOR BELT, 32″W x 12″L (0.81 x 0.30m)
10	1	51380	MASTERLINKS KIT, 32″ (0.81m) BELT *(INC. ITEMS 11-13)*
11	1	--	MASTERLINK, LEFT
12	4	--	MASTERLINK, CENTER
13	1	--	MASTERLINK, RIGHT
14	1	35000-1011	SHAFT, IDLER
15	6	22229-0003	SPROCKET, CONVEYOR BELT
17	2	22034-0003	BUSHING, BRONZE 3/4″ O.D. x 5/8″ 1.D.
18	2	37000-0413	BRACKET, IDLER SHAFT ADJUSTMENT
19	2	35000-1008	SCREW, CONVEYOR TENSION ADJUSTMENT
20	2	54947	BRACKET, SHAFT SUPPORT
21	1	35000-1012	SHAFT, DRIVE

ITEM	QTY	PART NO.	DESCRIPTION
22	6	22229-0003	SPROCKET, CONVEYOR BELT
24	1	22011-0013	COLLAR, SHAFT, WITH SET SCREW
25	2	22034-0003	BUSHING, BRONZE 3/4″ O.D. x 5/8″ 1.D.
26	2	35000-1080	SPACER, NYLON 1-1/4″ O.D. x 3/4″ I.D.
27	2	54947	BRACKET, SHAFT SUPPORT
28	1	35000-1013	ADAPTER, DRIVE SHAFT
29	1	22152-0017	SPROCKET, DRIVE SHAFT, 5/8" BORE, 9T, WITH SET SCREW
30	1	42400-0164	ASSEMBLY, ROLLER CHAIN (62 LINKS) WITH MASTERLINK
31	1	22273-0001	MASTERLINK, ROLLER CHAIN
32	1	22152-0018	SPROCKET, DRIVE MOTOR, 5/8″ BORE, 15T, WITH SET SCREW
33	1	35210-0640	ADAPTER, DRIVE MOTOR WITH SET SCREW
35	1	58678	DRIVE MOTOR, BRUSHLESS, 1400:1 130VDC
40	1	55027	END STOP, CONVEYOR, 29-1/4″ LONG
41	1	55028	REAR STOP, CONVEYOR, 18″ LONG
42	2	44811	CRUMB PAN
43	1	M10098	HARNESS, WIRE
44	1	45035	MOUNTING BRACKET, DRIVE MOTOR

View of “SPLIT” Belt Conveyor

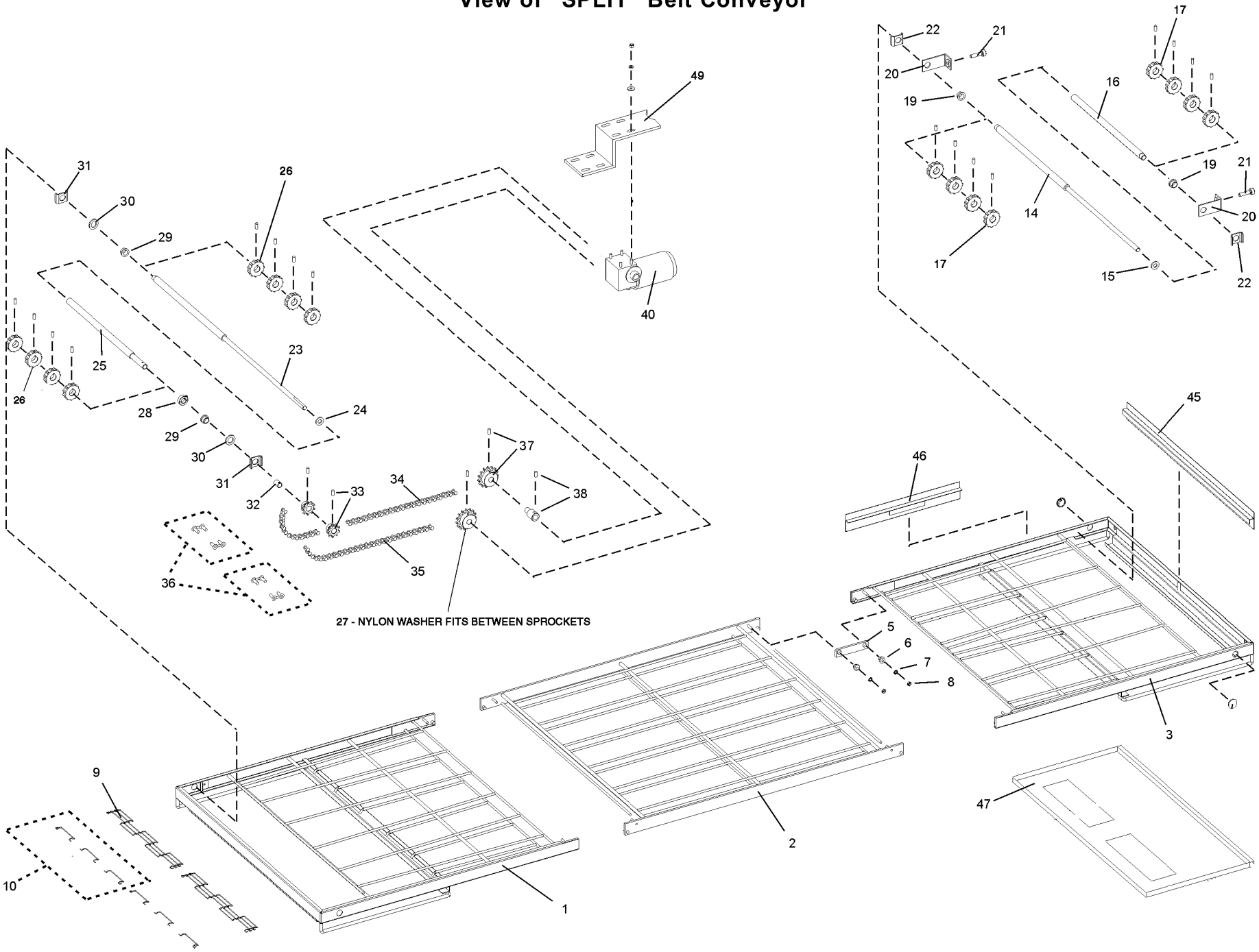

Parts for"SPLIT" Belt Conveyor

ITEM	QTY	PART NO.	DESCRIPTION
1	1	37210-0117	WELDMENT, CONVEYOR DRIVE FRAME
2	1	37210-0046	WELDMENT, CONVEYOR CENTER FRAME
3	1	37210-0116	WELDMENT, CONVEYOR IDLER FRAME
5	4	35210-0429	PIVOT PLATE
6	8	35210-0491	BUSHING, CONVEYOR ADJUSTMENT
7	8	F716A8805	WASHER, EXTERNAL TOOTH 1/4″
8	8	21176-0001	LOCKNUT, HEX 1/4″-20
9A	2	22450-0271	CONVEYOR BELT, COMPLETE, 15″W x 206″L (0.38 x 5.23m)
9B	--	33900-0037	CONVEYOR BELT, 15″W x 12″L (0.38 x 0.30m)
10	2	51382	MASTERLINKS KIT, 15″ (0.81m) BELT *(INC. ITEMS 11-13)*
14	1	42400-0354	SHAFT, IDLER, REAR, 32-3/4″
15	1	21415-0001	FLAT WASHER, BRONZE, 1″ O.D. X 1/2″ I.D.
16	1	35000-1535	SHAFT, IDLER, FRONT, 16-3/8″
17	8	22229-0003	SPROCKET, CONVEYOR BELT
19	2	22034-0003	BUSHING, BRONZE 3/4″ O.D. x 5/8″ I.D.
20	2	37000-0413	BRACKET, IDLER SHAFT ADJUSTMENT
21	2	35000-1008	SCREW, CONVEYOR TENSION ADJUSTMENT
22	2	54947	BRACKET, SHAFT SUPPORT
23	1	42400-0355	SHAFT, DRIVE, REAR, 35-1/3″
24	1	21415-0001	FLAT WASHER, BRONZE, 1″ O.D. X 1/2″ I.D.
25	1	35000-1536	SHAFT, DRIVE, FRONT, 17-3/4″

ITEM	QTY	PART NO.	DESCRIPTION
26	8	22229-0003	SPROCKET, CONVEYOR BELT
27	1	35000-1531	SPACER, NYLON, FITS BETWEEN SPROCKET
28	1	22011-0014	COLLAR, SPLIT LOCKING
29	2	22034-0003	BUSHING, BRONZE 3/4″ O.D. x 5/8″ I.D.
30	2	35000-1080	SPACER, NYLON 1-1/4″ O.D. x 3/4″ I.D.
31	2	54947	BRACKET, SHAFT SUPPORT
32	1	35900-0023	BUSHING, SPLIT BELT DRIVE SPROCKET
33	2	22152-0017	SPROCKET, DRIVE SHAFT, 5/8″ BORE, 9T, WITH SET SCREW
34	1	42400-0164	ASSEMBLY, ROLLER CHAIN COMPLETE (62 LINKS)
35	1	42410-0128	ASSEMBLY, ROLLER CHAIN COMPLETE (48 LINKS)
36	2	22273-0001	MASTERLINK, ROLLER CHAIN
37	2	22152-0018	SPROCKET, DRIVE MOTOR, 5/8″ BORE, 15T, WITH SET SCREW
38	1	35210-0640	ADAPTER, DRIVE MOTOR WITH SET SCREW
40	2	58678	DRIVE MOTOR, BRUSHLESS, 1/8 HP, 1400:1
45	1	55027	END STOP, CONVEYOR, 29-1/4″
46	1	55028	REAR STOP, CONVEYOR, 18″
47	2	44811	CRUMB PAN
48	2	M10098	HARNESS, WIRE
49	1	45035	MOUNTING BRACKET, DRIVE MOTOR

A	B	X	C	A							

→

D	E	X	E	D							

Notes

RT TO LT NO CHANGE TO FINGER CONFIG
AVG CONTROL T/CS: 5 USED
ENT: TOP INNER & OUTER LOCATIONS: 9.5″ PROBES
BOTTOM OUTER LOCATION: 9.5″ PROBE
EXIT: TOP INNER & OUTER LOCATIONS: 9.5″ PROBES

RPM= 2530RPM, INVERTERS SET @ 77Hz
BELT TIME & TEMP: 6:30 AND SET POINT TEMP 450° F

A = 55555 PLATE, OTR L10 W/6 ROWS 7/16NOZ
41437 PLATE, INNER L10 W/8 ROWS
41439 ASSY, MANF W/PERF BAFFLE ALUZ

B = 55556 PLATE, OTR L14 W/92F HLT7/16NOZ
52331 PLATE, INNER L14
52329 WLDMT, MANF L14 W/PERF BAFFLE ALUZ

C = 55557 PLATE, OTR L14 W/92FH RT 7/16NOZ
52331 PLATE, INNER L14
52329 WLDMT, MANF L14 W/PERF BAFFLE ALUZ

D = 37900-0051 PLATE, OUTER S/L6
35000-1366 PLATE, INNER PERF L6 ALUZ
36449 WLDMT, MANF W/PERF BAFFLE ALUZ

E = 55559 WLDMT, OTR PLATE L18 W/10 ROWS
35210-0520 PLATE, INNER PERF L18 ALUZ
43034 ASSY, MANF W/PERF BAFFLE ALUZ L18

F =

G =

Rev.	Date	Description	By
C	6/22/2006	ADDED TIME AND TEMP ECN 006204	AJ
B	3/10/2006	RELEASE TO PROD ECN 006083	AJ

Description

CONFIG, FNGR PS870M PHI@2530RPM

P/N	Rev.
57138	C

Middleby® Marshall
CONVEYORS OF EXCELLENCE

Wiring Diagrams (electrical schematics)

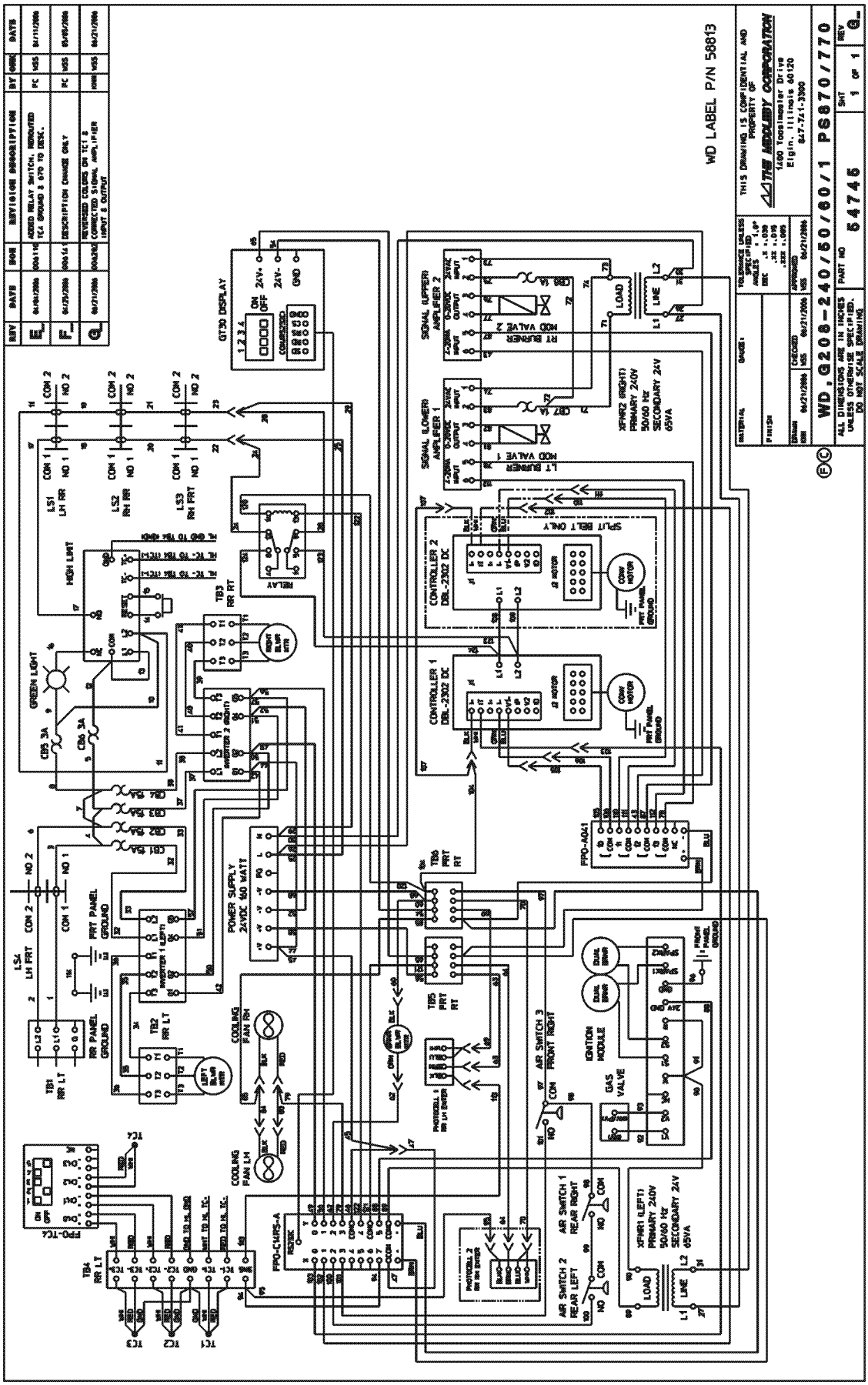

Middleby Marshall Model Number PS870 G208-240 volt 50/60 Hz, 1 Phase

54745G

NOTES

NOTES