This manual supersedes P/N 112425, dated April, 1997. Remove and destroy previous edition.

Simply Engineered Better

Technical Manual

For machines beginning with serial no. 89519 and above

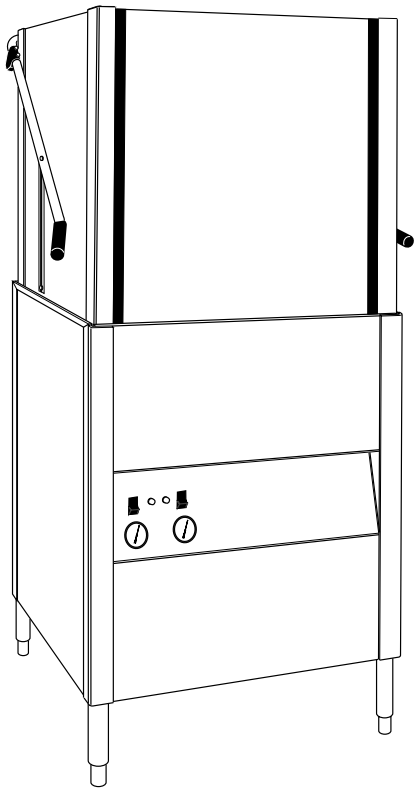

Door-Type Dishwasher

Model

MH-60M3
High Temperature
with Built-in Booster

MH-6NM3
High Temperature

MH-6LM3
Low Temperature

Machine Serial No.

February, 1998

Manual P/N 112425 REV. B

P. O. Box 4183
Winston-Salem, North Carolina 27115-4183
336/661-1992 Fax: 336/661-1660

2674 N. Service Road
Jordan Station, Ontario, Canada LOR 1SO
905/562-4195 Fax: 905/562-4618

Moyer Diebel

Complete the information below so it will be available for quick reference.

Model Number _____ Serial Number _____

Voltage and Phase _____

Moyer Diebel Parts Distributor _____ Phone _____
(if applicable)

_____

Moyer Diebel Service Agency _____ Phone _____

_____

Moyer Diebel Service:

Moyer Diebel, US

Phone: 1(336) 661-1992
1(800) 228-8350
Fax: 1(336) 661-1660

Moyer Diebel, Limited

Phone: 1(905) 562-4195
1(800) 263-5798
Fax: 1(905) 562-4618

Note: When calling to order parts, be sure to have the model number, serial number, voltage and phase of your machine, along with your customer account number.

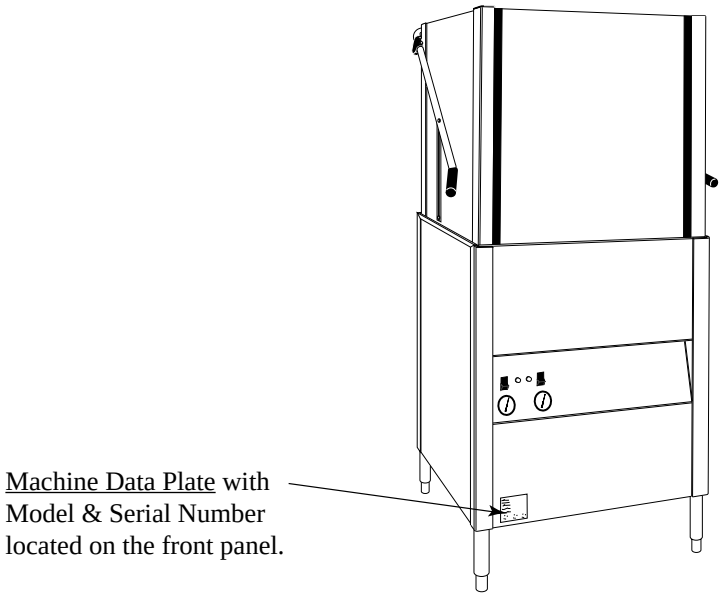

Revision History

Revision Date	Revised Pages	Serial Number Effectivity	Comments
4/27/97	—	89519	MH-M3 control circuit is 120VAC MH-M2 series was 220VAC
1/30/98	All	89519	Reissue of manual and replacement parts lists *This manual replaces temporary manual issued 4/5/97*
7/1/98	65	—	Corrected P/N's for fuses

CONTENTS

LIST OF FIGURES

LIST OF FIGURES (cont.)

LIMITED WARRANTY

Champion Industries/Moyer Diebel Limited, P.O. Box 4183, Winston-Salem, North Carolina 27115, and P. O. Box 301, 2674 North Service Road, Jordan Station, Ontario, Canada L0R 1S0 warrants machines, and parts, as set out below.

Warranty of Machines: Champion Industries/Moyer Diebel Limited warrants all new machines of its manufacture bearing the name “Champion” or "Moyer Diebel" and installed within the United States and Canada to be free from defects in material and workmanship for a period of one (1) year after the date of installation or fifteen (15) months after the date of shipment by Champion/Moyer Diebel, whichever occurs first. [See below for special provisions relating to Model Series DF and SW.] The warranty registration card must be returned to Champion/Moyer Diebel within ten (10) days after installation. If warranty card is not returned to Champion/Moyer Diebel within such period, the warranty will expire after one year from the date of shipment.

Champion/Moyer Diebel will not assume any responsibility for extra costs for installation in any area where there are jurisdictional problems with local trades or unions.

If a defect in workmanship or material is found to exist within the warranty period, Champion/Moyer Diebel, at its election, will either repair or replace the defective machine or accept return of the machine for full credit; provided, however, as to Model Series DF and SW, Champion/Moyer Diebel's obligation with respect to labor associated with any repairs shall end (a) 120 days after shipment, or (b) 90 days after installation, whichever occurs first. In the event that Champion/Moyer Diebel elects to repair, the labor and work to be performed in connection with the warranty shall be done during regular working hours by a Champion/Moyer Diebel authorized service technician. Defective parts become the property of Champion/Moyer Diebel. Use of replacement parts not authorized by Champion/Moyer Diebel will relieve Champion/Moyer Diebel of all further liability in connection with its warranty. In no event will Champion/Moyer Diebel's warranty obligation exceed Champion/Moyer Diebel's charge for the machine. The following are not covered by Champion/Moyer Diebel's warranty:

a. Lighting of gas pilots or burners.
b. Cleaning of gas lines.
c. Replacement of fuses or resetting of overload breakers.
d. Adjustment of thermostats.
e. Adjustment of clutches.
f. Opening or closing of utility supply valves or switching of electrical supply current.
g. Adjustments to chemical dispensing equipment.
h. Cleaning of valves, strainers, screens, nozzles, or spray pipes.
i. Performance of regular maintenance and cleaning as outlined in operator’s guide.
j. Damages resulting from water conditions, accidents, alterations, improper use, abuse, tampering, improper installation, or failure to follow maintenance and operation procedures.

Examples of the defects not covered by warranty include, but are not limited to: (1) Damage to the exterior or interior finish as a result of the above, (2) Use with utility service other than that designated on the rating plate, (3) Improper connection to utility service, (4) Inadequate or excessive water pressure, (5) Corrosion from chemicals dispensed in excess of recommended concentrations, (6) Failure of electrical components due to connection of chemical dispensing equipment installed by others, (7) Leaks or damage resulting from such leaks caused by the installer, including those at machine table connections or by connection of chemical dispensing equipment installed by others, (8) Failure to comply with local building codes, (9) Damage caused by labor dispute.

Warranty of Parts: Champion/Moyer Diebel warrants all new machine parts produced or authorized by Champion/Moyer Diebel to be free from defects in material and workmanship for a period of 90 days from date of invoice. If any defect in material and workmanship is found to exist within the warranty period Champion/Moyer Diebel will replace the defective part without charge.

DISCLAIMER OF WARRANTIES AND LIMITATIONS OF LIABILITY. CHAMPION/MOYER DIEBEL'S WARRANTY IS ONLY TO THE EXTENT REFLECTED ABOVE. CHAMPION/MOYER DIEBEL MAKES NO OTHER WARRANTIES, EXPRESS OR IMPLIED, INCLUDING, BUT NOT LIMITED TO, ANY WARRANTY OF MERCHANTABILITY, OR FITNESS OF PURPOSE. CHAMPION/MOYER DIEBEL SHALL NOT BE LIABLE FOR INCIDENTAL OR CONSEQUENTIAL DAMAGES. THE REMEDIES SET OUT ABOVE ARE THE EXCLUSIVE REMEDIES FOR ANY DEFECTS FOUND TO EXIST IN CHAMPION/MOYER DIEBELDISHWASHING MACHINES AND CHAMPION/MOYER DIEBEL PARTS, AND ALL OTHER REMEDIES ARE EXCLUDED, INCLUDING ANY LIABILITY FOR INCIDENTALS OR CONSEQUENTIAL DAMAGES.

Champion/Moyer Diebel does not authorize any other person, including persons who deal in Champion/Moyer Diebel dishwashing machines, to change this warranty or create any other obligation in connection with Champion/Moyer Diebel Dishwashing Machines.

rev. 8699

INTRODUCTION

Welcome to **Moyer Diebel...**
and thank you for allowing us to take care of your dishwashing needs.

This manual covers the door-type dishwasher, Models MH-60, MH-6N, MH-6L.
Your machine was completely assembled, inspected, and thoroughly tested at our factory before it was shipped to your installation site.

This manual contains:

- Installation Instructions
- Operation and Cleaning Instructions
- Troubleshooting Guide
- Basic Service Information
- Replacement Parts Lists
- Electrical Schematics

All information, illustrations and specifications contained in this manual are based upon the latest product information available at the time of publication. **Moyer Diebel** constantly improves its products and reserves the right to make changes at any time or to change specifications or design without notice and without incurring any obligation.

For your protection, factory authorized parts should always be used for repairs.

Replacement parts may be ordered directly from your **Moyer Diebel** authorized parts distributor or authorized service agency. When ordering parts, please supply the model number, serial number, voltage, and phase of your machine, the part number, part descriptions and quantity.

Model Numbers

MH-60, MH-6N, MH-6L

The MH-60 model is a high temperature (180°F/82°C rinse) sanitizing model with booster.

The MH-6N model is a high temperature (180°F/82°C rinse) sanitizing model without booster.

The MH-6L is a low temperature (Min. 120°F/49°C-140°F/60°C Optimum) sanitizing model for use with a sodium hypochlorite (Chlorine) based sanitizer at a minimum concentration of 50 PPM in the final rinse.

Standard Equipment includes:

MH-60, MH-6N, MH-6L

- Automatic tank fill and start
- Built-in electric booster heater (MH-60 only)
- Field convertible to corner model
- Electric tank heat
- Balanced three door lift system
- Low-water tank heat protection
- 1-hp drip-proof pump motor
- Door safety switch
- Common utility connections
- Two dish racks (peg and flat bottom)
- Detergent/chemical connection provisions
- Stainless steel front and side panels
- 60-second time cycle
- 1-1/2" O.D. gravity drain connection
- Water pressure reducing valve (MH-60 only)
- Interchangeable upper and lower spray arms

Options (MH-60 only)

- Electric booster (70°F/39°C temperature rise) heater for 110°F/43°C supply water
- Steam injector or steam coil tank heat (steam booster 40°F/23°C-70°F/39°C rise)

Accessories

Additional dishracks:

Dish rack (peg)	P/N 101285
Silverware rack (flat bottom)	P/N 101273
3/4" Pressure reducing valve (PRV)	P/N 112387

Electrical Power Requirements:Fig Electric Heat/Electric Booster

Model	Voltage	Booster Rise (MH-60 Only)	Machine Full Load Amps	Power Requirement (125% Service Factor)
MH-6N/MH-6L	115/60/1	—	48 Amps	60 Amps
MH-6N/MH-6L	208/60/1	—	23 Amps	29 Amps
MH-6N/MH-6L	220/60/1	—	23 Amps	29 Amps
MH-6N/MH-6L	230/60/1	—	23 Amps	29 Amps
MH-6N/MH-6L	240/60/1	—	24 Amps	30 Amps
MH-6N/MH-6L	208/60/3	—	12 Amps	15 Amps
MH-6N/MH-6L	220/60/3	—	13 Amps	16 Amps
MH-6N/MH-6L	230/60/3	—	13 Amps	16 Amps
MH-6N/MH-6L	240/60/3	—	13 Amps	16 Amps
MH-6N/MH-6L	380/60/3	—	7 Amps	9 Amps
MH-6N/MH-6L	415/60/3	—	8 Amps	10 Amps
MH-6N/MH-6L	480/60/3	—	6 Amps	8 Amps
MH-6N/MH-6L	575/60/3	—	5 Amps	6 Amps
MH-60	115/60/1	—	—	—
MH-60	208/60/1	40°F/23°C	59 Amps	74 Amps
MH-60	220/60/1	40°F/23°C	61 Amps	76 Amps
MH-60	230/60/1	40°F/23°C	63 Amps	79 Amps
MH-60	240/60/1	40°F/23°C	65 Amps	81 Amps
MH-60	208/60/3	40°F/23°C	33 Amps	41 Amps
MH-60	220/60/3	40°F/23°C	35 Amps	44 Amps
MH-60	230/60/3	40°F/23°C	36 Amps	45 Amps
MH-60	240/60/3	40°F/23°C	37 Amps	46 Amps
MH-60	380/60/3	40°F/23°C	20 Amps	25 Amps
MH-60	415/60/3	40°F/23°C	20 Amps	25 Amps
MH-60	480/60/3	40°F/23°C	17 Amps	21 Amps
MH-60	575/60/3	40°F/23°C	14 Amps	18 Amps
MH-60	115/60/1	—	—	—
MH-60	208/60/1	—	—	—
MH-60	220/60/1	—	—	—
MH-60	230/60/1	—	—	—
MH-60	240/60/1	—	—	—
MH-60	208/60/3	70°F/39°C	50 Amps	63 Amps
MH-60	220/60/3	70°F/39°C	52 Amps	65 Amps
MH-60	230/60/3	70°F/39°C	54 Amps	68 Amps
MH-60	240/60/3	70°F/39°C	56 Amps	70 Amps
MH-60	380/60/3	70°F/39°C	30 Amps	38 Amps
MH-60	415/60/3	70°F/39°C	33 Amps	41 Amps
MH-60	480/60/3	70°F/39°C	28 Amps	35 Amps
MH-60	575/60/3	70°F/39°C	23 Amps	29 Amps

INSTALLATION

Unpack the dishwasher

CAUTION:
Care should be taken when lifting the machine to prevent damage.

NOTE:
The installation of your machine must meet all applicable health and safety codes.

1. Immediately after unpacking the machine, inspect for any shipping damage. If damage is found, save the packing material and contact the carrier immediately.

2. Remove the dishwasher from the skid. Move the machine to its permanent location.

NOTE:
Refer to: To change from Straight-through Operation to Corner Operation on the next page if your machine will be placed for corner operation.

3. Level the machine (if required) by placing a level on the top of the machine and adjusting the feet. Level the machine front-to-back and side-to-side.

4. Remove the dishracks from the interior of the machine.

5. Refer to Fig. 1. Remove (2) screws that hold the front panel. Remove the front panel in preparation for service connections.

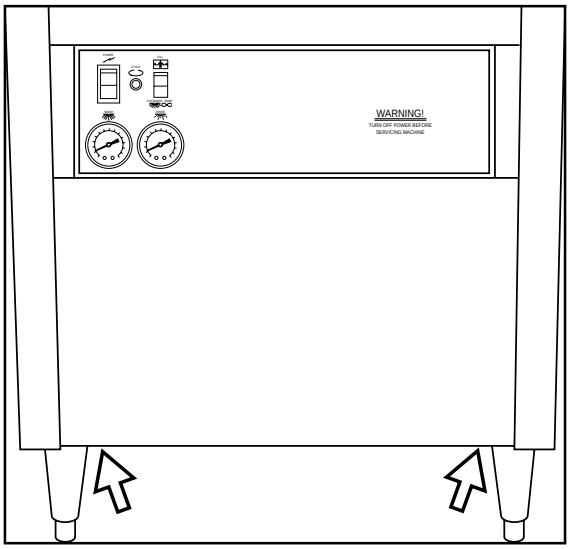

Figure 1
Remove Front Panel

To Change from Straight-through Operation to Corner Operation

The dishwasher is shipped from the factory for straight-through operation. The following instructions explain how to change the dishwasher for corner operation.

Refer to Fig. 2

1. Place the dishwasher so that operator controls are readily accessible.
2. Minimum clearance from any wall is 5-1/4" (133mm).

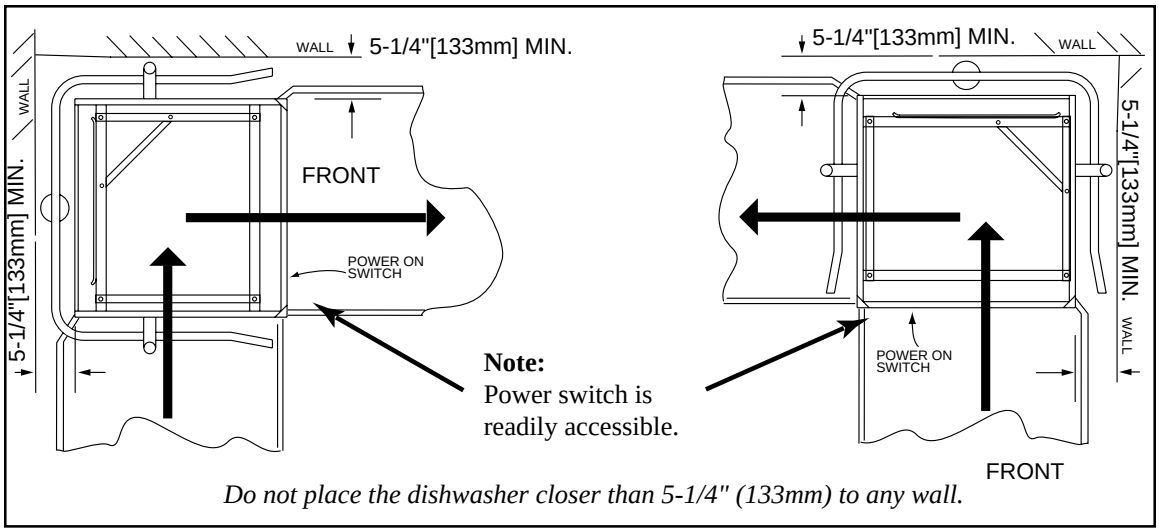

Figure 2
Placement for Corner Operation

Refer to Fig. 3a-3b and perform the steps below.

1. Remove the front rack guide (A). Discard the square spacers.
2. Move front rack guide (A) to the left side of the rack tracks. (See Fig. 3b) Use existing hardware.
3. Unbolt the track (B) and rack support rod (C).
4. Remove and save the two remaining fasteners from rear track.
5. Bolt (B) and (C) as shown in Fig. 3b.

Figure 3
Change the Track Assembly

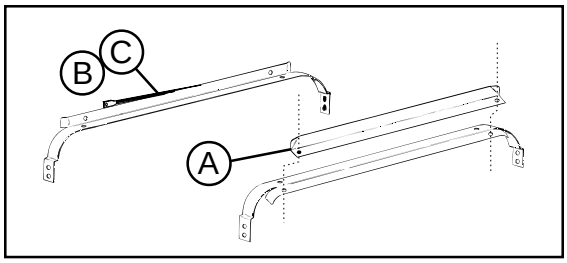

Figure 3a
Straight-through Configuration

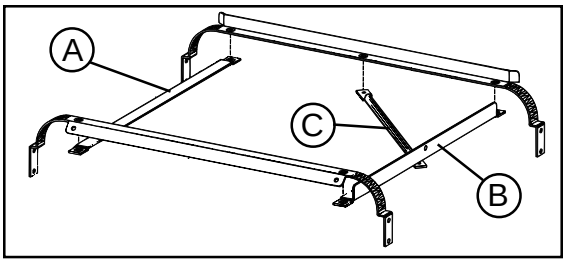

Figure 3b
Corner Configuration

INSTALLATION (Cont.)

Electrical Connections

WARNING:
Electrical and grounding connections must comply with all applicable Electrical Codes.

WARNING:
When working on the dishwasher, disconnect the electric service and place a tag at the disconnect switch to indicate work is being done on that circuit.

1. A qualified electrician must compare the electrical power supply with the machine electrical specifications before connecting to the incoming service through a fused disconnect switch.

Refer to Fig. 4

2. A knock-out is provided at the lower right rear corner (as viewed from the front) for the electrical service connection. A fused disconnect switch or circuit breaker (supplied by others) is required to protect the power supply circuit.

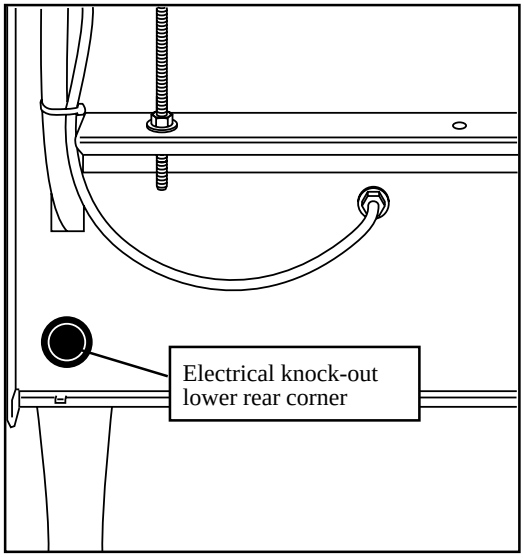

Figure 4
Electrical Connection Location

Electrical Connections (Cont.)

Refer to Fig. 5

3. Remove (2) lower screws from the front panel of the machine to expose the electrical controls. Remove (2) screws on the control panel support. Swing the hinged control panel forward.

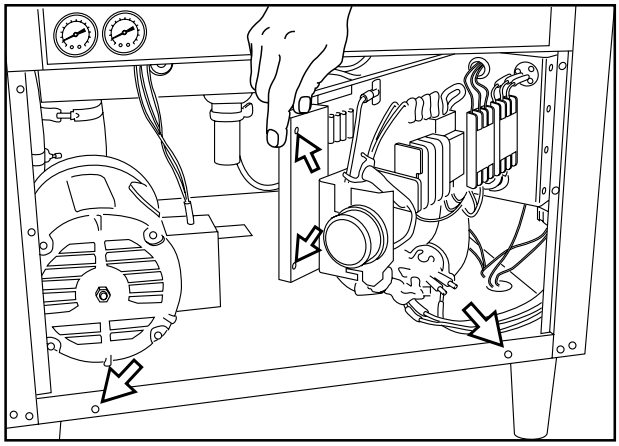

Figure 5
Hinged Control Panel

Refer to Fig. 6

4. Three phase or single phase incoming power wiring connections are made at the bottom of the machine's main terminal block. The main terminal block is located on the side of the front right post of the dishwasher.

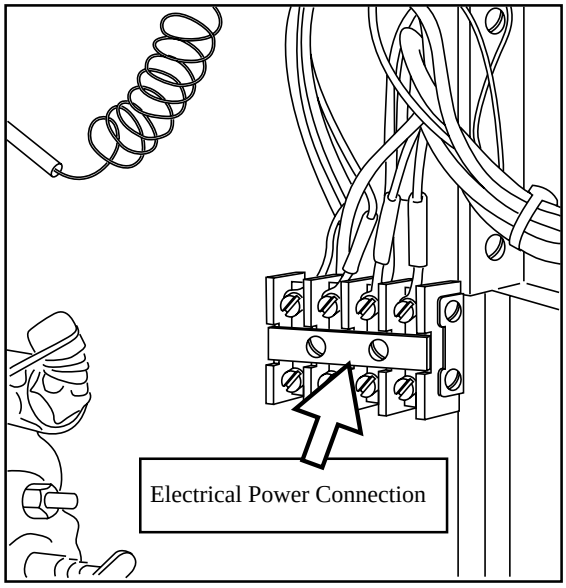

Figure 6
Main Terminal Block

INSTALLATION (Cont.)

Plumbing Connections

NOTE:
Plumbing connections must comply with all applicable sanitary and plumbing codes.

Water Connections

1. All MH series dishwashers require a single, hot water supply.

   The hot water connection to all MH series dishwashers is 3/4" NPT.

   The connection is made from underneath the dishwasher.

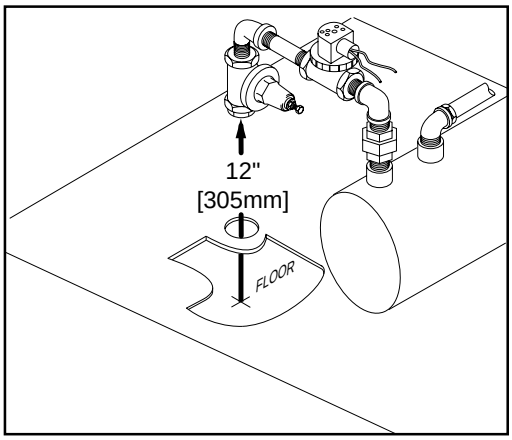

Figure 7
Hot Water Connection
(MH-60 Only)
3/4" NPT

The following minimum water temperatures are recommended:

MH-60 with built-in 40° rise electric booster (Minimum 140°F/60°C) (Min./Max. flow pressure 20-22 PSI/138-151.8 kPa)

MH-60 with built-in 70° rise electric booster (Minimum 110°F/43°C) (Min./Max. flow pressure 20-22 PSI/138-151.8 kPa)

MH-6N without built-in booster (Minimum 180°F/70°C) (Min./Max. flow pressure 20-22 PSI/138-151.8 kPa)

MH-6L low temperature (Minimum 120°F/49°C-140°F/60°C Optimum) (Min./Max. flow pressure 20-22 PSI/138-151.8 kPa)

Refer to Figs. 7 and 8

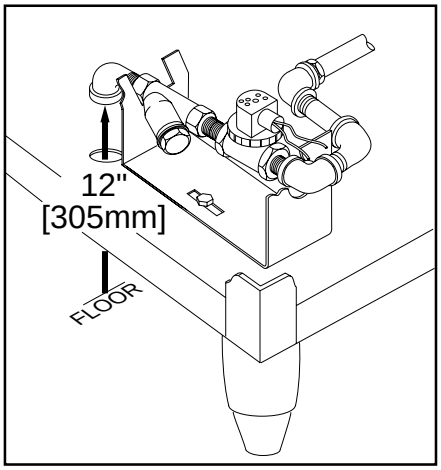

Figure 8
Hot Water Connection
(MH-6N, MH-6L Only)
3/4" NPT

Water Connections (Cont.)

2. A manual shut-off valve for steam and water (supplied by others) should be installed in the supply line to allow for servicing of the machine. The shut-off valve should be the same size or larger than the supply line.
3. Install a 3/4" pressure reducing valve (PRV) in the water supply line if flow pressure exceeds 20-22 PSI/138-151.8 kPa.

   A PRV is standard equipment on Model MH-60. A PRV is not standard equipment on Models MH-6N, MH-6L.

Drain Connections

Refer to Fig. 9

1. MH series models are GRAVITY DRAIN machines equipped with a 1-1/2" O.D. hose connection point.
2. The maximum drain flow rate is 15 gallons/min-56.8 liters/min.
3. Drain height for all models must not exceed 11" (280mm) above floor level.
4. The drain connection is made to the dishwasher from underneath the machine through an access hole in the machine base.

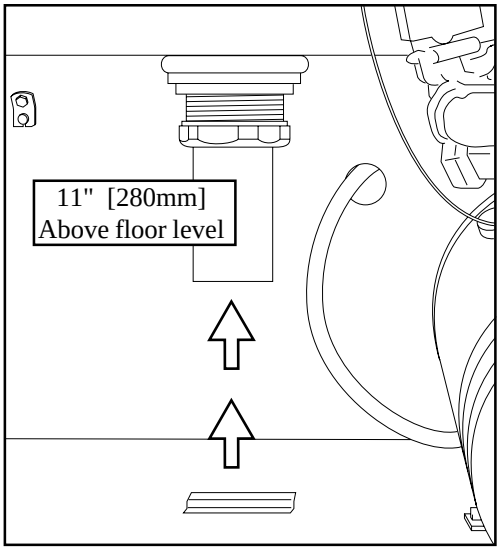

Figure 9
Drain Hose Connection
1-1/2" O.D.
(Max flow rate = 15 gal/min-56.8 liters/min)

Ventilation

NOTE:
Ventilation must comply with local sanitary and plumbing codes.

CAUTION:
Exhaust air should not be vented into a wall, ceiling, or concealed space of a building. Condensation can cause damage.

INSTALLATION (Cont.)

Chemical Connections

NOTE:
Consult a qualified chemical supplier for your chemical needs.

Refer to Fig. 10

1. A chemical signal terminal block is supplied for chemical dispensing equipment.

2. The terminal block is located below the control panel fuse block.

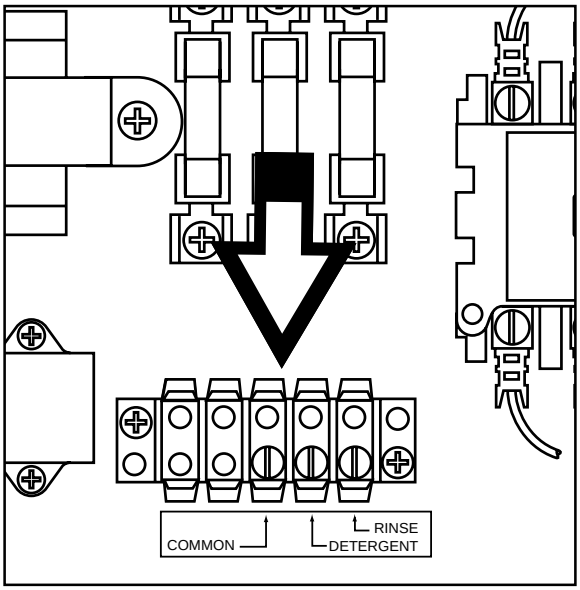

Figure 10
Chemical Dispenser
Signal
Terminal Block

Refer to Fig. 11

3. The detergent signal is limited to a maximum load of 1 Amp. Signal voltage is 115VAC.

4. The Rinse aid/Sanitizer signal is limited to a maximum load of 1 Amp. Signal voltage is 115VAC.

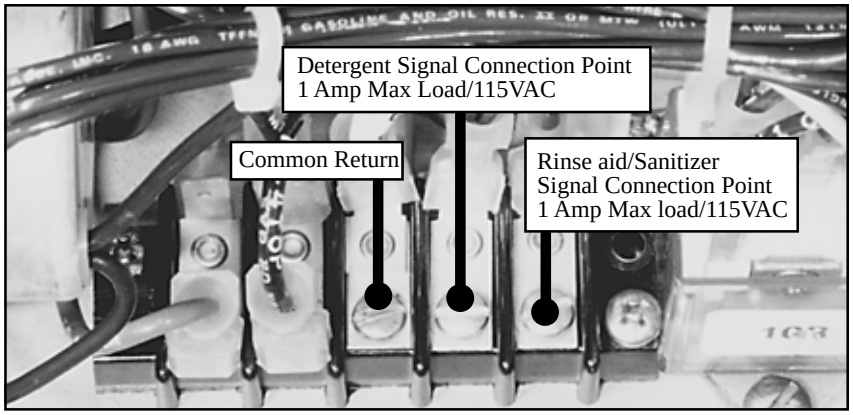

Figure 11
Chemical Signal
Connection Points

Chemical Connections (Cont.)

Refer to Fig. 12

5. A 1/2" detergent probe injection point is provided at the rear and left side of the dishwasher.

6. Detergent may be added manually if your dishwasher is not equipped with dispensing equipment. Consult your chemical supplier for recommended amounts.

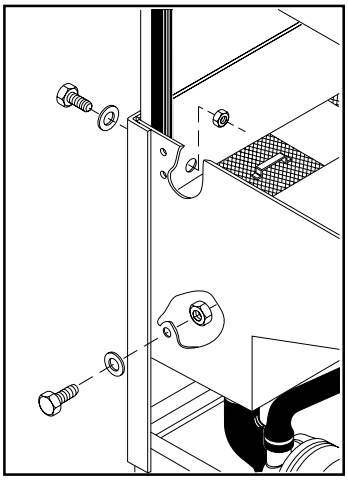

Figure 12
Detergent Probe
Injection Points, 1/2"

Refer to Fig. 13

7. **MH-60, 6N, 6L**
   A 1/4" NPT rinse aid injection point is provided in the final rinse manifold.
   Use a liquid rinse aid.
   The manifold is located on the top right side of the dishwasher.

8. **MH-6L Only**
   A 1/8" NPT sanitizer injection point is provided in the final rinse manifold.

   Models MH-60 and MH-6N do not require sanitizer.

9. Use a sodium hypochlorite (Chlorine) based sanitizer at a minimum concentration of 50PPM in the final rinse.

10. Use chlorine test papers to verify and monitor the 50PPM chlorine level.

WARNING:
Never premix rinse aid with the sanitizing agent. Mixing may cause hazardous gases to form.

CAUTION:
Some metals, including silver, aluminum and pewter, are attacked by sodium hypochlorinte (chlorine). Avoid cleaning these metals in a MH-6L.

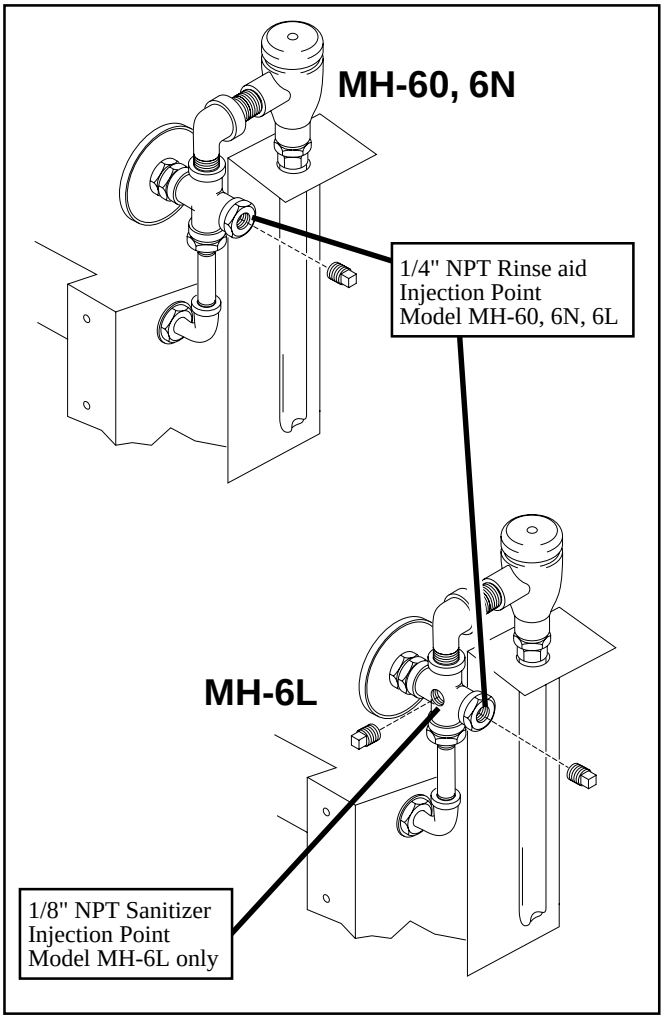

Figure 13
Rinse Aid and
Sanitizer Injection Points
(Top of Dishwasher)

INITIAL START-UP

Complete the installation

After plumbing and electrical connections are made, follow the steps below to complete the installation of your dishwasher.

1. Remove the white protective covering from the exterior of the machine.
2. Remove any foreign material from inside the machine.
3. Make sure dishwasher power switch is off.
4. Turn main water supply on.
5. Turn main power on at the main power service disconnect switch.

1

Install the Scrap Screens and Drain-Overflow Assembly

Install scrap screens.
Make sure rubber stopper is secure on the drain-overflow assembly.

Make sure the drain-overflow seats securely in the tank bottom.

MAKE SURE DOORS ARE FULLY CLOSED.

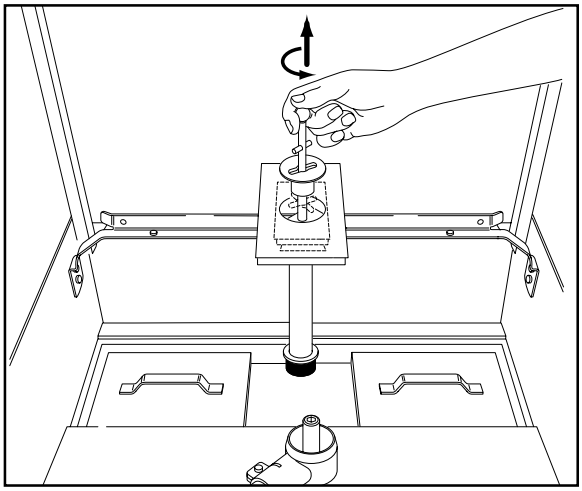

2

The controls are located on the front of the dishwasher.
A- On/Off power switch
B- Power indicator Light
C- In-cycle light
D- Extended wash switch
E- Wash water temperature gauge
F- Final rinse pressure gauge

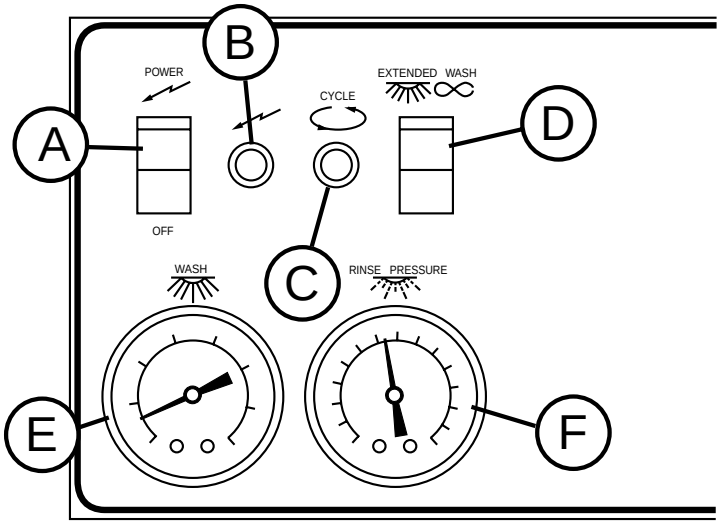

INITIAL START-UP (Cont.)

3

THE POWER SWITCH IS
ON DURING INITIAL FILL.

Make sure the doors are fully closed.
Push the On/Off power
switch to the UP position.

THE DISHWASHER FILLS
AUTOMATICALLY.

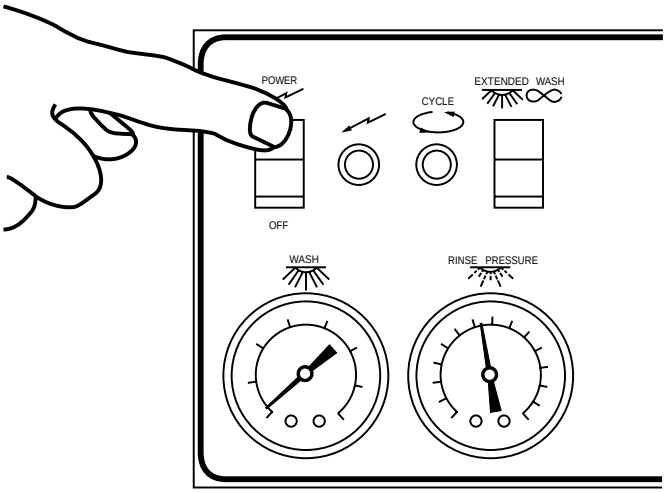

NOTE:
The dishwasher will fill automatically each time the power is turned off even if the dishwasher is full of water.

4

Note that the power indicator
light is illuminated.

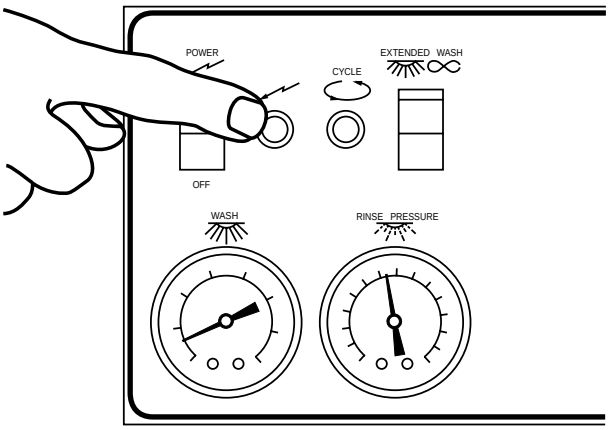

5

Check Wash Water Temperature

The wash tank heater and
the (booster tank heater, MH-60 only)
will begin to heat the water in
the dishwasher.

Wait approximately 10 minutes
for the wash tank water to
reach operating temperature.
The temperature should be a minimum
of 150°F/66°C for (MH-60, MH-6N).
The MH-6L requires a minimum of
120°F/49°C. However, a minimum of
140°F/60°C is optimum for the MH-6L.

Prescrap the dishes. Load ware into
the dishrack. Open the doors, insert the
rack into the dishwasher.

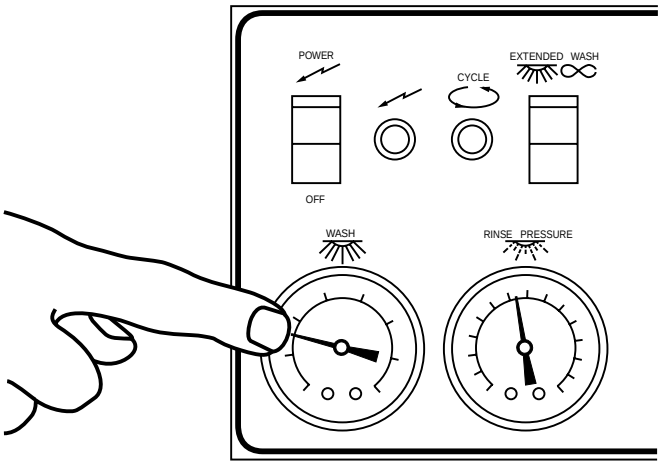

INITIAL START-UP (Cont.)

6

Fully close the dishwasher doors. The dishwasher will begin the automatic cycle.

Opening the doors anytime during the cycle will stop the dishwasher.

Closing the doors will resume the automatic cycle where it left off.

The cycle times are listed below:

Wash	=	45 seconds
Dwell	=	1 second
Final rinse	=	14 seconds

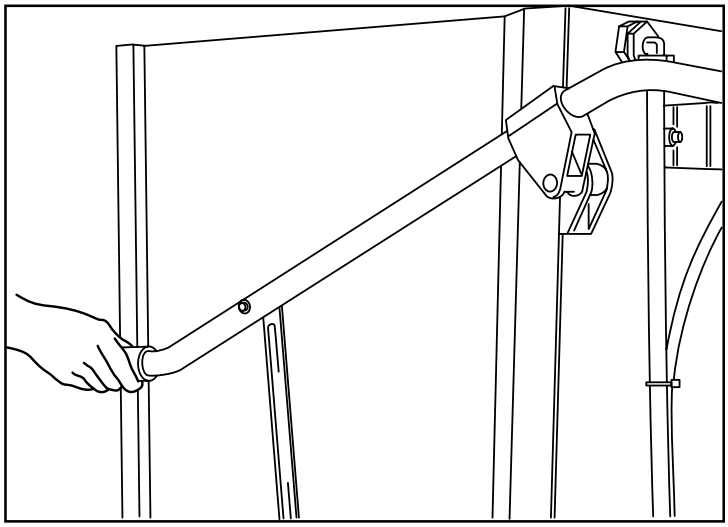

7

Note that the in-cycle light is lit during the automatic dishwasher cycle.

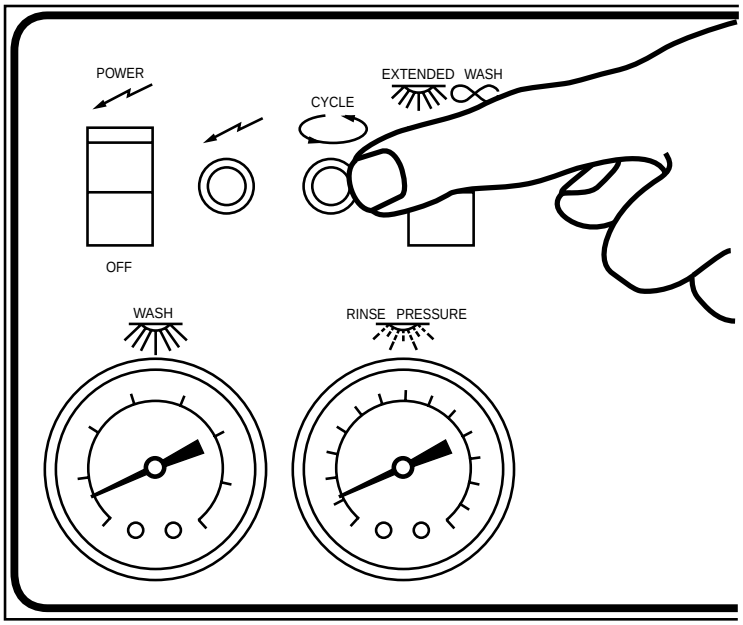

INITIAL START-UP (Cont.)

8

Check Final Rinse Water Temperature

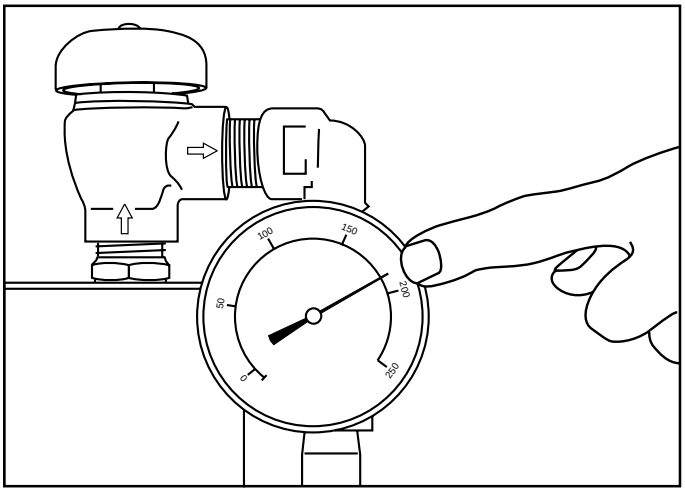

Check the final rinse water temperature during the final rinse cycle.

The final rinse water temperature gauge is located in the final rinse piping at the top of the dishwasher.

The final rinse water temperature should be a minimum of 180°F/82°C for (MH-60, MH-6N). The optimum final rinse temperature for (MH-60, MH-6N) is 180-195°F/82-91°C.

The MH-6L requires a minimum final rinse temperature of 120°F/49°C. However, a minimum final rinse temperature of 140°F/60°C is optimum for the MH-6L.

9

Check Final Rinse Water Pressure

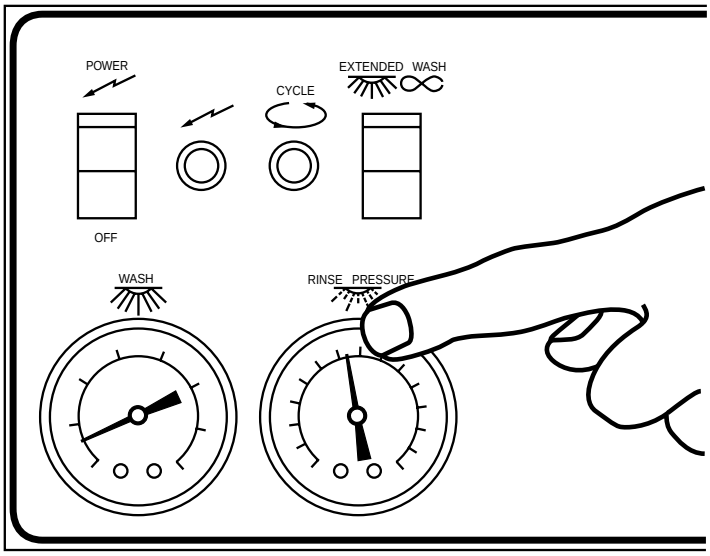

The final rinse water pressure gauge should indicate a flowing pressure of 20-22 PSI/138-151.8 kPa during the final rinse cycle for all models.

A pressure reducing valve (PRV) is required if flow pressure exceeds 20-22 PSI/138-151.8 kPa.

INITIAL START-UP (Cont.)

10

The Extended Wash Operation

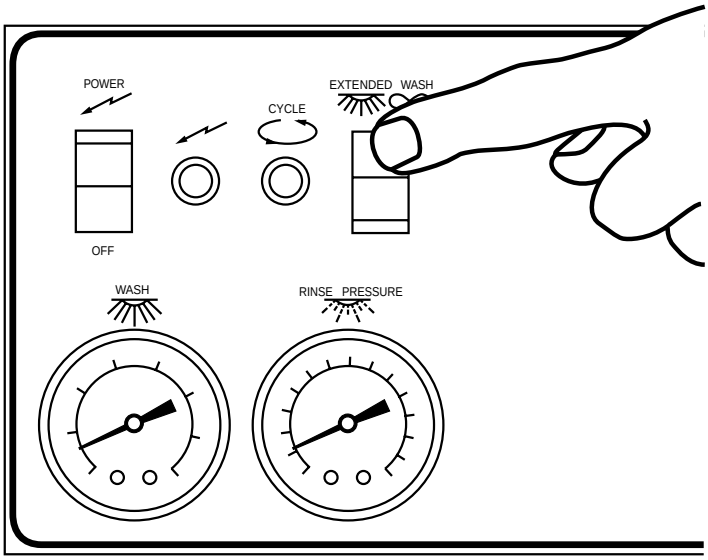

The extended wash switch holds the dishwasher in a continuous wash mode for cleaning heavily soiled ware.

Open and then fully close the dishwasher doors. The dishwasher will begin a wash cycle automatically.

Push the Extended wash switch UP to the extended wash position. The dishwasher will remain in a continuous wash mode until the switch is flipped down. The dishwasher will resume the cycle and finish with a final rinse.

11

Complete the initial start-up

Check all the plumbing for leaks. Also, check the drain plumbing for leaks and be sure that the drain will handle the drain water flow (15 gal/min-56.8 liters/min) from the dishwasher.

After the drain and the plumbing connections are checked, turn off the dishwasher power switch.

12

Drain the dishwasher

Make sure the dishwasher power switch is turned off. Drain the dishwasher by pulling the handle of the drain-overflow assembly straight up. Rotate the handle 90° to lock the drain in the up position.

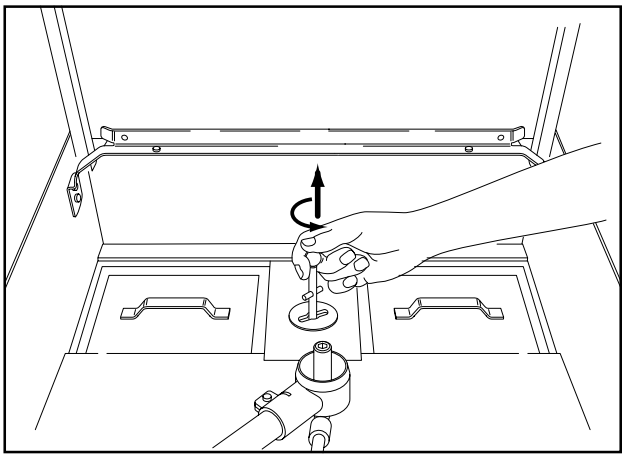

INITIAL START-UP (Cont.)

13

Drain the dishwasher (Cont.)

Be sure the drain-overflow seal is secure on the drain-overflow assembly.

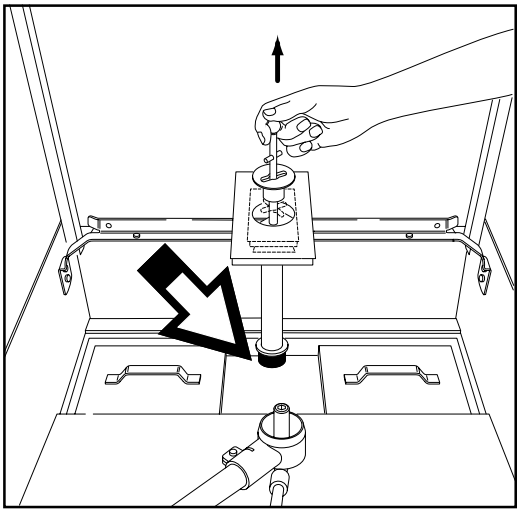

14

Remove the scrap screens and check the drain located in the bottom of the dishwasher wash tank.

Make sure that the building drain handles the water flow exiting the dishwasher.

Clean the interior of the wash tank of any foreign material.

Leave the doors open to air dry the interior of the dishwasher.

The initial start-up is complete.

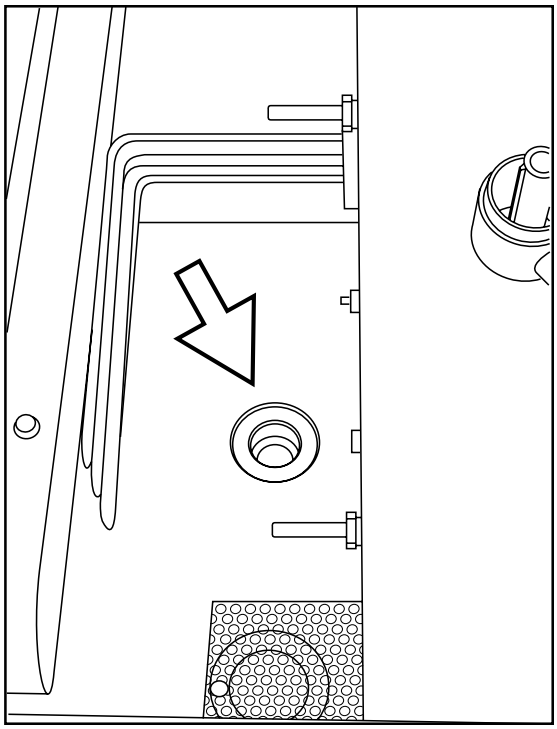

OPERATION SUMMARY

Action	Result
1. Push the On/Off power switch “UP” to the ON position. Dishwasher fills automatically.	1. The power indicator light illuminates. The wash tank heater and the booster tank heater begin to heat.
2. Wait approximately 10 minutes for the wash tank heater to heat the water. Then, check the reading on the wash water temperature gauge.	2. The wash water temperature gauge should indicate a minimum of 150°F/66°C for MH-60,MH-6N and 120°F/60°C for MH-6L.
3. Prescrap and load the ware into the dishrack.	3. Ware should be placed edgewise in the peg rack. Cups and bowls should be placed upside down in the flat rack. Silverware should be spread evenly in a single layer in the flat rack.
4. Open the doors. Insert a dishrack of soiled ware. Fully close the doors. Opening the doors anytime during the automatic cycle stops the dishwasher. Closing the doors will resume the cycle where it left off.	4. In-cycle light illuminates as the dishwasher begins a 60 second automatic cycle. The cycle times are listed below: Wash = 45 seconds Dwell = 1 second Final rinse = 14 seconds
5. Check the final rinse temperature gauge reading during the 14 second final rinse cycle.	5. The final rinse temperature gauge should indicate a minimum of 180°F/82°C for MH-60/6N. The optimum final rinse temperature range is between 180-195°F/82-90°C for MH60/6N. MH-6L optimum is 140°F/60°C.
6. Check the incoming water pressure during the 10 second final rinse cycle.	6. The water pressure gauge should indicate a flowing pressure of 20-22 PSI/138-151.8 kPa. A pressure reducing valve (PRV) is required if flow pressure exceeds 20-22 PSI/138-151.8 kPa.
7. The 60 second automatic cycle ends.	7. The in-cycle light goes out.
8. Open the doors. Remove the clean rack. Insert another rack of soiled ware. Fully close the doors.	8. The 60 second automatic cycle begins again.
9. Turn power OFF at the dishwasher. Remove the drain-overflow assembly. Clean the scrap screens. Clean the dishwasher after each meal period or every two hours of operation.	9. Dishwasher wash tank drains completely. Periodic cleaning reduces detergent consumption and improves washing results.

CLEANING

Cleaning your machine is the best maintenance that you can provide. Components that are not regularly flushed and cleaned do not perform well.

The following schedules are the minimum requirements necessary for the proper performance of your machine. Intervals should be shortened whenever your machine is faced with abnormal working conditions, hard water, or multiple shift operations.

CLEANING SCHEDULE

Every 2 Hours or After Each Meal Period

1. Drain the dishwasher.
2. Flush interior with fresh water.
3. Clean scrap screens and pump intake screen.
4. Clean spray arm nozzles.

Every 8 Hours or at the End of the Day

1. Drain the machine.
2. Flush interior with fresh water.
3. Clean scrap screens and pump intake screen.
4. Clean spray arms.
5. Thoroughly clean the exterior of machine.

   DO NOT HOSE DOWN WITH WATER.
6. Reassemble the machine.
7. Leave doors open to aid in drying.

CAUTION:
Do not leave water in wash tank overnight.

DELIMING

Your dishwasher should be delimed regularly depending on the mineral content of your water. Inspect the machine interior for mineral deposits and use a deliming solution for the best cleaning results.

NOTE:
Consult your chemical supplier for an appropriate deliming solution.

WARNING:
Deliming solutions or other acids must not come in contact with household bleach (sodium hypochlorite) or any chemicals containing chlorine, iodine, bromine, or fluorine. Mixing will cause hazardous gases to form.
Skin contact with deliming solutions can cause severe irritation and possible chemical burns. Consult your chemical supplier for specific safety precautions.

DELIMING PROCESS

Model MH-60 and MH-6N

1. Remove all dishes from machine.
2. Remove any chemical pick-up tubes from their containers.
3. Place each tube in a container of fresh water and prime the chemical lines for several minutes to thoroughly flush chemical from the lines. Leave pick-up tubes out of their containers.
4. Drain the machine and refill with fresh water.
5. Spray interior walls with delimimg solution and let sit for 5 or 10 minutes depending on amount of build-up. Add deliming solution to wash tank.
   Do not let chemicals sit for longer than 15 minutes.
6. Close the doors to run an automatic cycle.
7. Repeat Steps 4-6 if necessary.
8. Lift the drain lever assembly and drain the machine.
9. Refill the machine and run a complete cycle two additional times. Drain and refill the machine after each cycle to thoroughly flush any deliming solution from the interior of the machine.
10. Flip the power switch to OFF.
11. Drain machine.
12. Deliming is complete.

TROUBLESHOOTING

Perform the seven checks listed below in the event that your dishwasher does not operate as expected.

1. All switches are ON
2. Drain-overflow assemby is in place and seated
3. Wash and rinse nozzles are clean
4. Wash and rinse pipe assemblies are installed correctly
5. Scrap screens are properly positioned
6. Thermostat(s) are properly adjusted
7. Detergent and rinse additive dispensers are adequately filled

If a problem still exists, use the following table for troubleshooting

CONDITION	CAUSE	SOLUTION
Machine will not start	Doors not closed	Make sure doors are fully closed
	Door safety switch faulty	Contact your service agency
	Start switch faulty	Contact your service agency
	Main switch off	Check disconnect at main panel
	Overload protector tripped	Reset overload in Control Box
Machine washes constantly	Extended wash switch in extended wash position	Push Extended wash switch down to the off position
Low or no water	Main water supply is turned off	Turn on house water supply
	Drain-overflow assembly is not in place and seated	Place and seat drain-overflow
	Machine doors not fully closed	Close doors securely
	Faulty fill valve	Contact your service agency
	Machine not filled initially	Push Power switch UP to fill
	Clogged strainer in fill valve	Clean or replace
Continuous water filling	Stuck or defective Fill Timer	Contact your service agency
	Fill valve will not close	Clean or replace
	Drain-overflow not in place	Install drain-overflow assembly
Wash motor not running	Overload protector tripped	Reset overload in Control Box
	Defective motor	Contact your service agency
Wash tank water temperature is low when in use	Incoming water temperature at machine too low	Raise temperature to: 110-140°F/43-60°C for MH60 180°F/82°C for MH-6N 120°F/49°C-140°F/60°C for MH6L
	Defective thermometer	Check or replace
	Defective thermostat	Check for proper setting or replace
	Defective heater element	Check or replace
	Defective solenoid valve	Check or replace
	Heater elements have soil/lime buildup	Clean and delime

TROUBLESHOOTING (Cont.)

CONDITION	CAUSE	SOLUTION
Insufficient pumped spray pressure	Clogged pump intake screen	Clean
	Clogged spray pipe	Clean
	Scrap screen full	Must be kept clean and in place
	Low water level in tank	Check drain-overflow assembly
	Pump motor rotation incorrect	Reverse connection between L1 and L2 in Control Cabinet
	Defective pump seal	Contact Service Agent
Insufficient final rinse or no final rinse	Faulty pressure reducing valve	Clean or replace
	Improper setting on pressure reducing valve	Set flow pressure at 20-22 PSI/ 138-151.8 kPa
	Clogged rinse nozzle and/or pipe	Clean
	Improper water line size	Have installer change to proper size
	Clogged strainer in fill valve	Clean or replace
Low final rinse temperature	Low incoming water temperature	Check the booster (MH60, MH6N) be sure the thermostat is set to maintain180°F/82°C temperature. MH6L check incoming water is set Min. 120°F/49°C-140°F/60°C.
		Check valve to be sure it is clean and operating
	Defective thermometer	Check for proper setting or replace
Poor washing results	Detergent dispenser not operating properly	Contact detergent supplier
	Insufficient detergents	Contact detergent supplier
	Wash water temperature too low	See condition “Wash Tank Water Temperature” above
	Wash arm clogged	Clean
	Improperly scraped dishes	Check scraping procedures
	Ware being improperly placed in rack	Use proper racks. Do not overload racks
	Improperly cleaned equipment	Unclog wash sprays and rinse nozzles to maintain proper pressure and flow conditions. Overflows must be open. Keep wash water as clean as possible.
	Heater elements have soil/lime buildup	Clean and delime

BASIC SERVICE

This Basic Service section does not cover all possible repair procedures. If you require additional service support, you may call your local service company or:

Moyer Diebel National Service
USA: 1-800-858-4477

Canada: 1-800-263-5798

Please have the Model and Serial Number of the machine ready when you call.

ELECTRICAL SERVICE

NOTE:
DO NOT USE CHASSIS GROUND WHEN PERFORMING VOLTAGE CHECKS.
Doing so will result in false and inaccurate readings.
PERFORM VOLTAGE CHECKS BY READING FROM THE HOT SIDE OF THE LINE AND NEUTRAL (any #2 or white wire).

WARNING:
USE EXTREME CAUTION *when performing tests on energized circuits.*

WARNING:
When repairing a circuit, disconnect the power at the main service disconnect switch and place a tag at the disconnect switch to indicate that work is being performed on the circuit.

Troubleshooting

Schematics
Moyer Diebel places an electrical schematic in the control cabinet of every machine before it is shipped. Schematics are included at the back of this manual as well. Be aware that these schematics include options that may not apply to your machine. Options are enclosed in dashed lines with the words (IF USED) next to them on the schematic. Disregard any options that appear on the schematics which are not a part of your machine.

Tools
All electrical repairs can be made with: Standard set of hand tools
Volt/Ohm Meter (VOM)
Clip-on AC current tester

Circuit Tests
Use a clip-on AC current tester to check the motors and electric heaters.
Use a VOM to test line voltages and the 115VAC control circuit.

ELECTRICAL SERVICE (Cont.)

Fuses —

Refer to Fig. 14.
There are two fuse blocks. A 3 pole block (A) is located in the main control cabinet. The (A) fuses protect the wash tank heater circuit. Booster heater circuits (MH-60 only) are not fused. A 2 pole fuse block is located on the machine base to protect the control circuit.

To Replace a fuse:
Turn the dishwasher main power switch off. Disconnect power to the machine at the main service disconnect switch. Replace the fuse. If the fuse blows again, DO NOT INCREASE THE FUSE SIZE. DETERMINE THE CAUSE OF THE OVERLOAD.

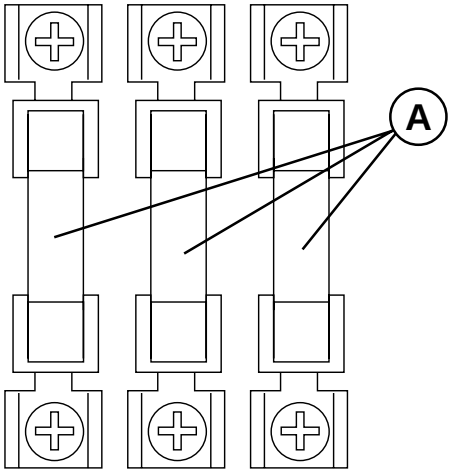

Figure 14
Wash tank heater fuses
Control Cabinet

Motor Overloads —

The wash pump motor has an overload to protect it from line voltage electrical overloads. The overload disconnects 120VAC power to the motor contactor coil.

Refer to Fig. 15.

Note the Switch Lever on the Overload.
If the switch lever is off with the “0” showing then the overload has tripped.

To Reset the Motor Overload:
Flip the overload switch to the On position. A “1” should be visible on the switch lever.

To Replace a Motor Overload:
Disconnect the wires to the overload. Release the mounting catch on the front side of the overload. Push forward and lift out. Snap the new overload into place and reconnect the wires.

To adjust the overload setting:
The screwdriver in Fig. 15 is positioned to adjust the motor overload AMP setting. Read the full load amps (FLA) motor amps on the motor nameplate. Turn setting to match the motor nameplate.

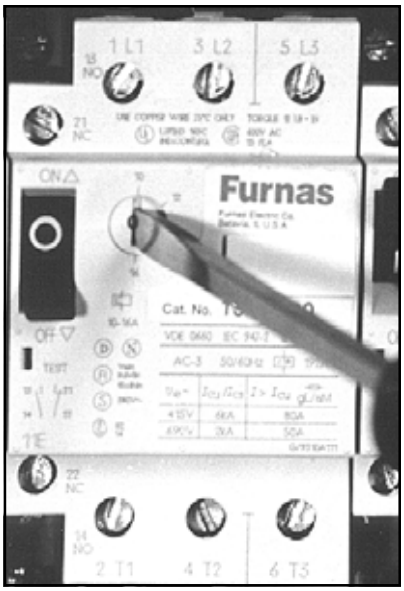

Figure 15
Motor Overload

ELECTRICAL SERVICE (Cont.)

Timers

MH-60, MH-6N, and MH-6L models have two timers located in the control cabinet.

These timers are not adjustable.
The timer chart is shown in Fig. 17.

Cycle Timer —

Refer to Fig. 16.
The cycle timer controls the dishwasher's 60-second operation. The timer consists of a timer motor, four micro-switches, and four non-adjustable metal cams.
Cam A controls power to the timer motor
Cam B controls power to the wash motor.
Cam C is not used.
Cam D controls power to the final rinse valve.

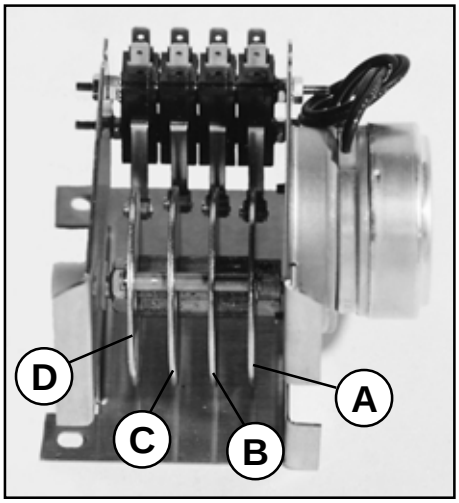

Figure 16
Cycle Timer

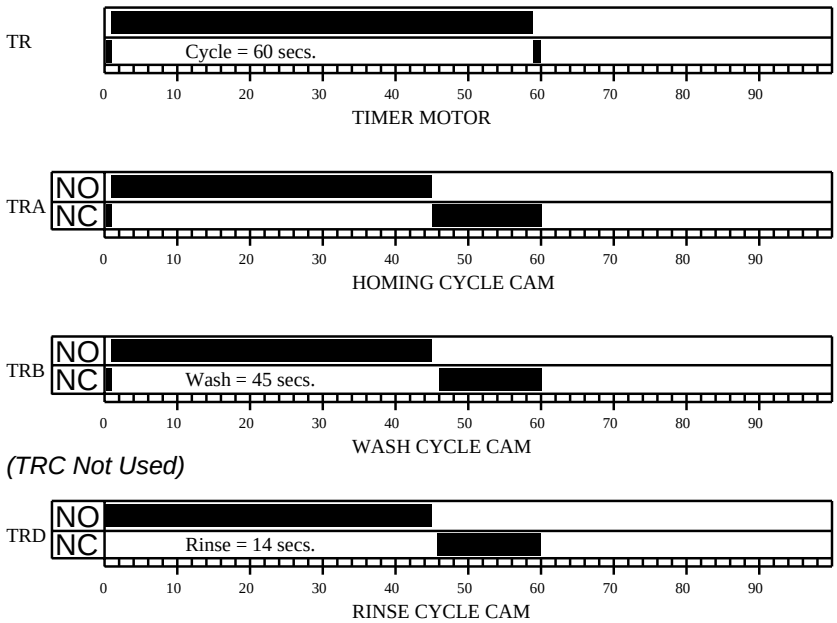

Figure 17
Cycle Timer Chart

Fill Timer —

Refer to Fig. 18.
The fill timer controls the dishwasher's 90-second fill operation. The timer consists of a timer motor, one micro-switch, and one non-adjustable plastic cam. The fill timer operates during initial fill. The fill timer also operates if main power is turned off and then turned back on even if the dishwasher is full of water.

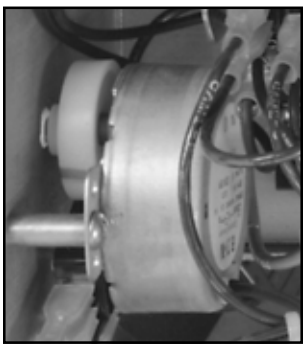

Figure 18
Fill Timer

ELECTRICAL SERVICE (Cont.)

Heater Element Wiring – Booster Tank and Wash Tank Heater Elements

Refer to the illustrations and follow the steps below to properly install terminal jumpers and to make line power connections to a replacement element.

Step 1. Hold the element assembly with the calrod coils facing toward you.

Step 2. Match your element coil to Configuration A, B, C, or D.

Step 3. Rotate your element coils to match the correct configuration.

Step 4. Turn the element over and match your element to the correct terminal configuration.

Step 5. Install terminal jumpers according to the illustration for your voltage requirement.

Step 6. Install the element and make your line connections 1L1, 1L2, or 1L3 per the illustration.

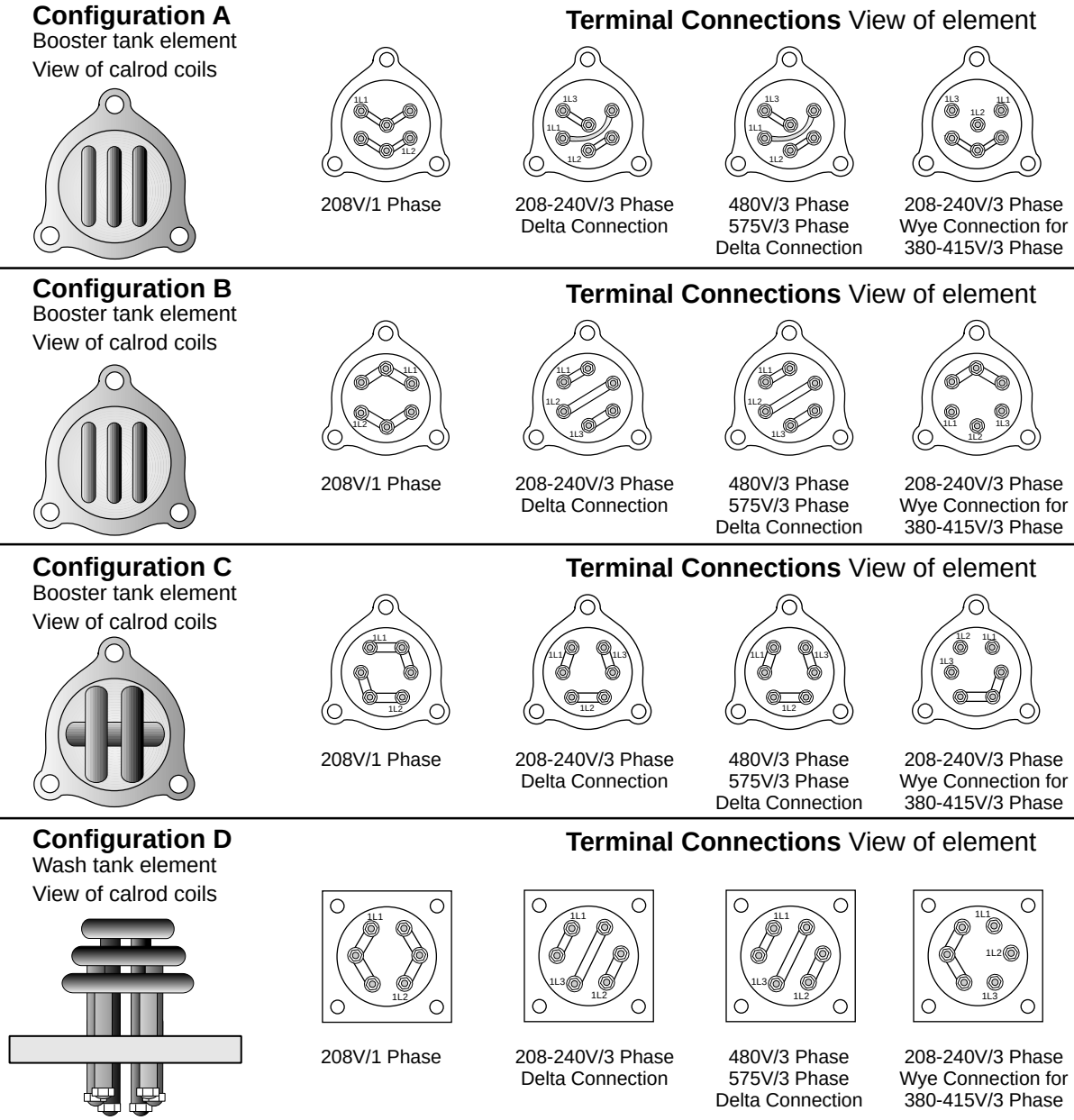

Figure 19
Heater Element Wiring

ELECTRICAL SERVICE (Cont.)

Motor Connections —

1. Models MH-60, MH-6N, and MH-6L are available in either single phase or 3 phase voltages.
2. Motor rotation was set at the factory. For three phase machines, reversing the motor direction is done in the control cabinet by reversing the wires L1 and L2 on the disconnect side of the main electrical connection block. For single phase machines, motor rotation is changed at the motor connection plate on the rear of the single phase motor (if necessary).

Refer to Fig. 20 for the proper wiring of the pump motor for single and three phase voltages.

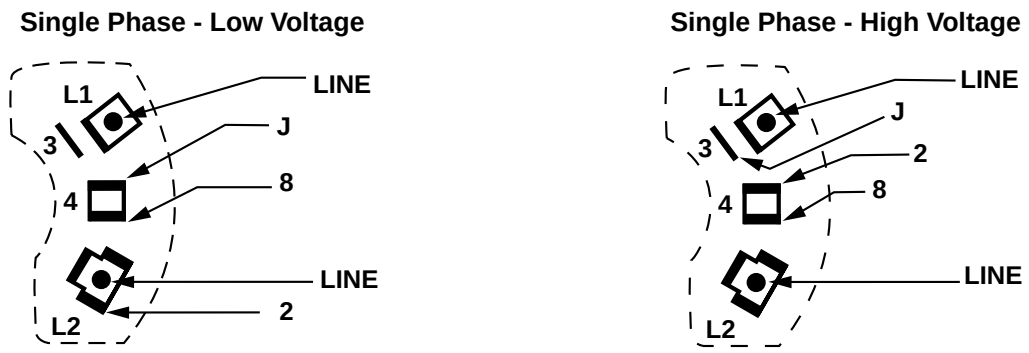

Figure 20
Pump Motor Wiring Diagrams

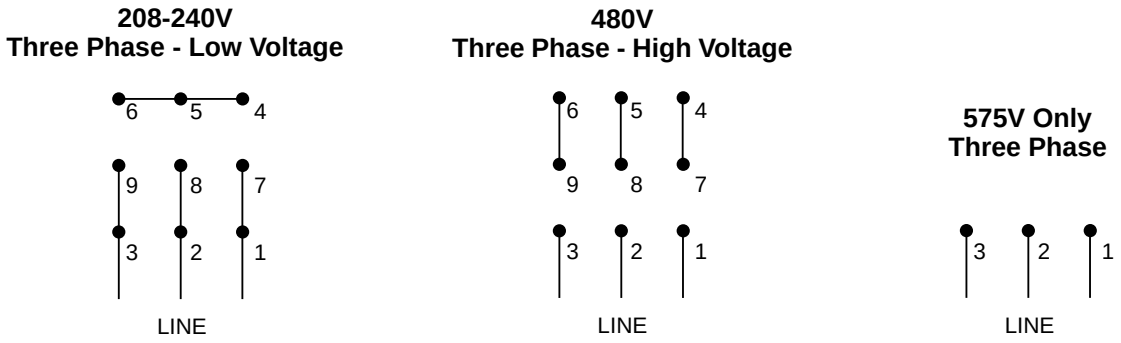

MECHANICAL SERVICE

Pump Seal Replacement

1. Disconnect the power to the machine at the main breaker panel or fuse box.
2. Drain the machine.
3. Remove the front and side panels.
4. Remove drain plug on the pump volute and drain the pump.
5. Remove the pump hoses.
6. Disconnect the wires to the motor at the motor junction box.
7. Unbolt motor from machine base and remove the pump/motor assembly.
8. Remove bolts on volute and carefully remove from the pump flange.
9. Remove the impeller retaining bolt and nut from center of impeller.
10. Lock the motor shaft with a wrench or pliers. The back of motor shaft is square.
11. Turn the impeller counter-clockwise to remove from shaft (right hand threads).
12. Remove the old seal and discard.
13. Check seal seat in the pump flange and clean thoroughly.
14. Press rubber seal/ceramic portion of seal assembly into the pump flange. Use a water soluble lubricant. Be careful to keep the ceramic clean.
15. Install the rotating part of the seal on the shaft with the graphite surface toward the ceramic. Use a water soluble lubricant on the rubber seal part only (not the graphite).
16. Reinstall impeller, and new flange gasket. Reinstall bolts. Reinstall drain plug.
17. Reinstall the pump/motor assembly and reconnect the pump hoses.
18. Fill the dishwasher with water.
19. Check motor rotation by bump starting motor.
    Correct motor shaft rotation is clockwise when viewing motor from the rear.
20. Test run and check for leaks.

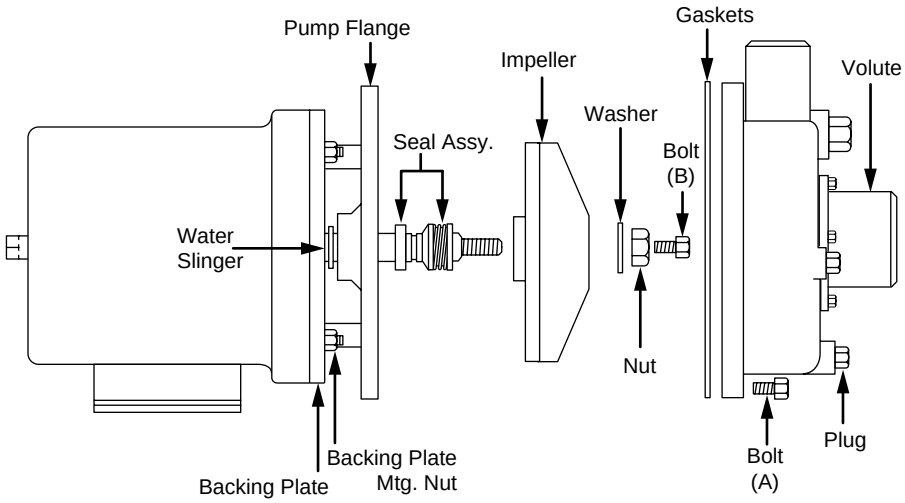

Figure 21
Pump Seal Replacement

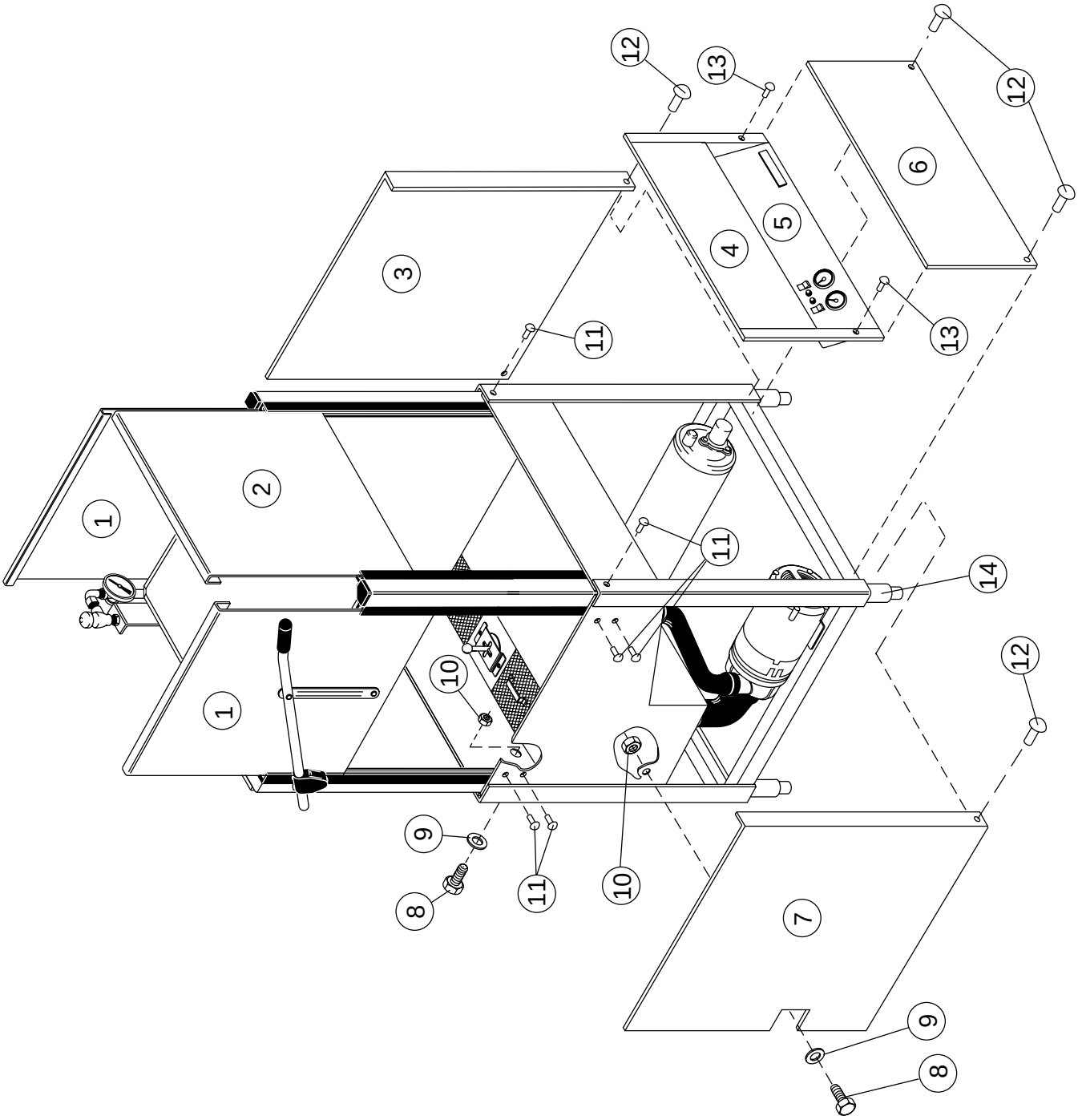

Figure 22 - MH-60/6N/6L
Doors and Panels

MH-60/6N/6L

DOORS AND PANELS

Fig. 22 Item No.	Part No.	Part Description	Qty.
1	0709405	DOOR, SIDE	2
2	0709317	FRONT DOOR, DOOR MACH	1
3	321929	RH PANEL NO CUT OUT	1
4	321930	PANEL,INSTRUMENT	1
5	112388	DECAL, CONTROL PANEL	1
6	322074	PANEL, FRONT LOWER	1
7	321941	LH PANEL W/CUTOUT	1
8	108418	PLUG PLASTIC	2
9	109034	WASHER 13/16 X 1 13/16 FIBER	2
10	108417	NUT, PLASTIC	2
11	100779	SCREW, 1/4-20 X 5/8 TRUSS HEAD	6
12	0504822	SCREW, 8-32 X 1/2 PAN HEAD	4
13	100763	SCREW, 10-32 X 1-1/4 ROUND HEAD	2
14	112587	FOOT, CAST GREY	4

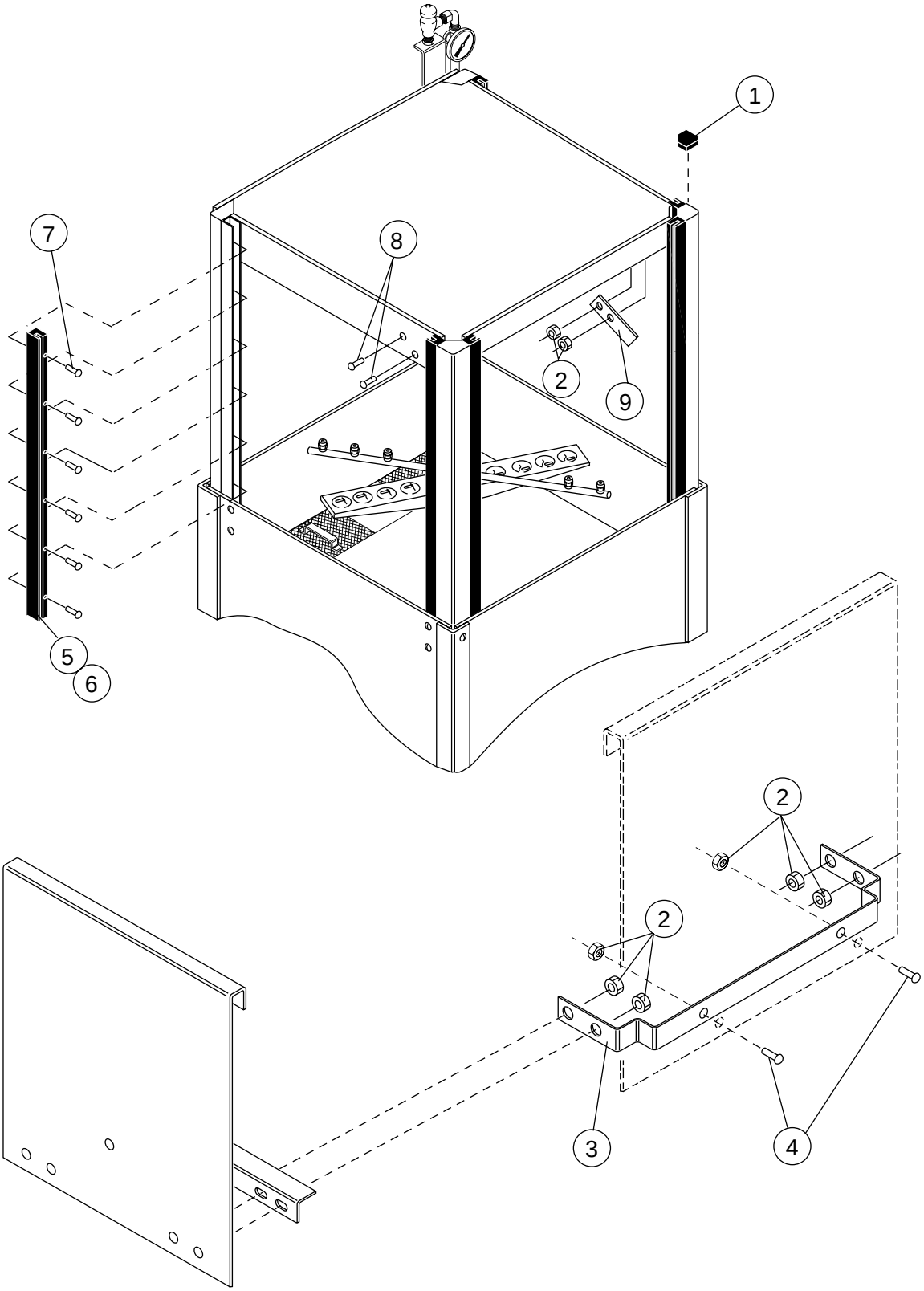

Figure 23 - MH-60/6N/6L
Door Guides, Stops, and Lift Bracket

MH-60/6N/6L

DOOR GUIDES, STOPS, AND LIFT BRACKET

Fig. 23 Item No.	Part No.	Part Description	Qty.
1	108053	PLUG, CORNERPOST	2
2	107966	NUT, GRIP 10-32 W/INSERT	8
3	0309277	BRACKET, DOOR LIFT	1
4	100097	SCREW 10-32 X 1/2" TRUSS HEAD	2
5	108347	GUIDE, DOOR	6
6	108410	GASKET, DOOR GUIDE (26")	12
7	107970	SCREW 8-32 X 1 FILISTER	36
8	100007	SCREW 10-32 X 3/8 TRUSS HEAD	2
9	0307328	STOP, DOOR	2

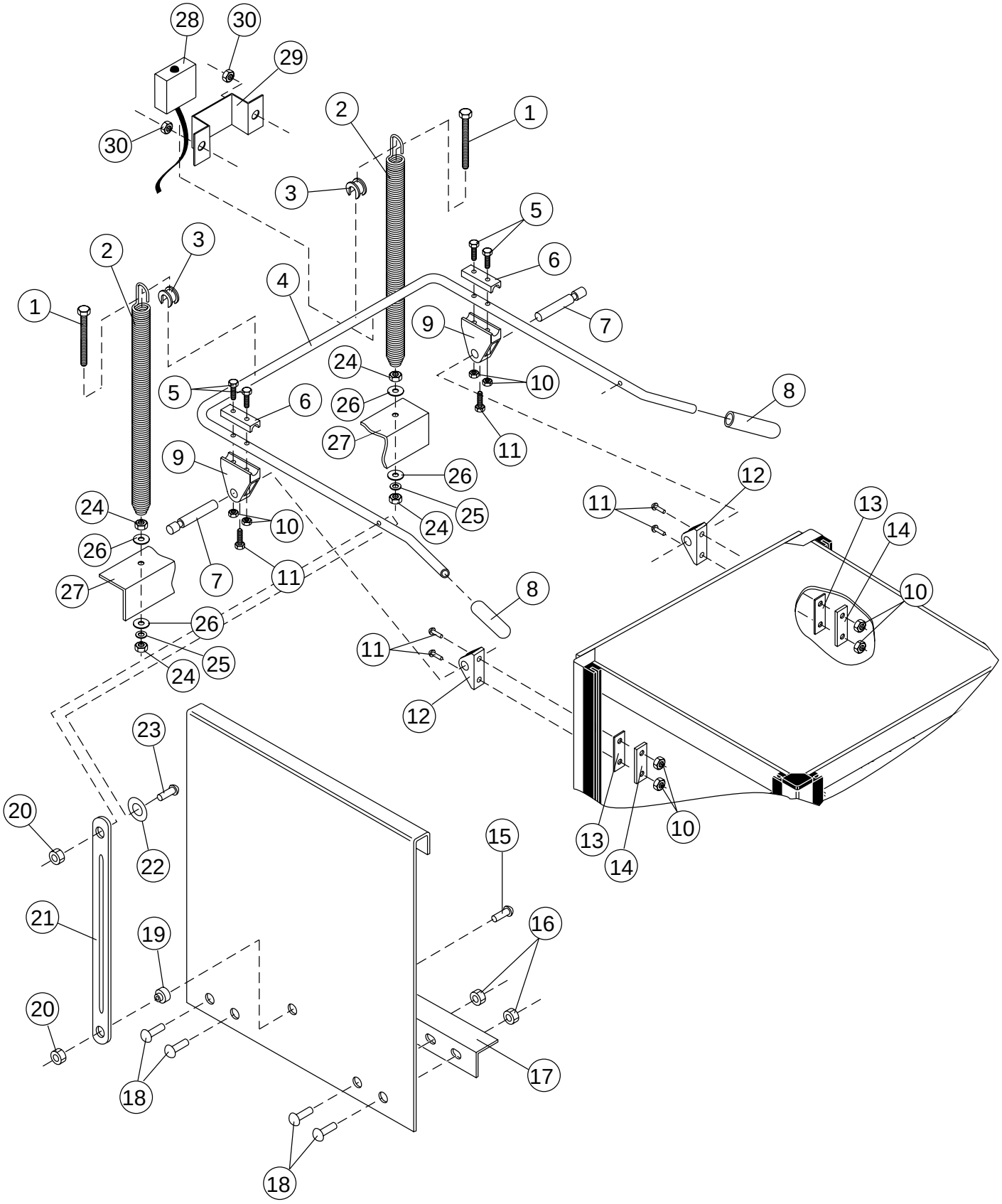

Figure 24 - MH-60/6N/6L
Door Handle, Spring Assembly, and Safety Switch

MH-60/6N/6L

DOOR HANDLE, SPRING ASSEMBLY, AND SAFETY SWITCH

Fig. 24 Item No.	Part No.	Part Description	Qty.
1	0509168	BOLT 5/16-18 X 11 HEX HEAD	2
2	108066	SPRING, EXTENSION	2
3	107397	BLOCK, SPRING HOOK	2
4	0509166	DOOR HANDLE	1
5	107437	BOLT M6 X 45MM HEX HEAD	4
6	107396	BLOCK, UPPER PIVOT	2
7	107393	PIN, PIVOT	2
8	0508864	HANDLE, GRIP	2
9	107395	BLOCK, LOWER PIVOT	2
10	107420	NUT, PLAIN M6	8
11	107436	SCREW M6 X 16MM FILISTER	6
12	107399	SUPPORT, PIVOT BLOCK	2
13	108368	GASKET, BACKING	2
14	304811	PLATE, BACKING	2
15	100740	BOLT 5/16-18 X 1 HEX HEAD	2
16	107966	NUT, GRIP 10-32 W/NYLON INSERT	8
17	322077	GUARD, SPLASH	2
18	100097	SCREW 10-32 X 1/2 TRUSS HEAD	8
19	0509264	BUSHING, SIDE DOOR	2
20	0509274	NUT, ACORN 5/16-18 SST	2
21	0309167	LIFT BAR, DOOR	2
22	102376	WASHER, FLAT	2
23	104002	BOLT 5/16-18 X 1-1/2	2
24	100154	NUT, PLAIN 5/16-18	4
25	106013	WASHER, LOCK 5/16 SPLIT	2
26	102376	WASHER 5/16 X 3/4 X 1/16	4
27	321927	SPRING ANCHOR BRACKET	1
28	0509199	SWITCH, DOOR SAFETY	1
29	0309451	BRACKET, SWITCH	1
30	107967	NUT, GRIP (1/4-20 w/nylon insert)	2

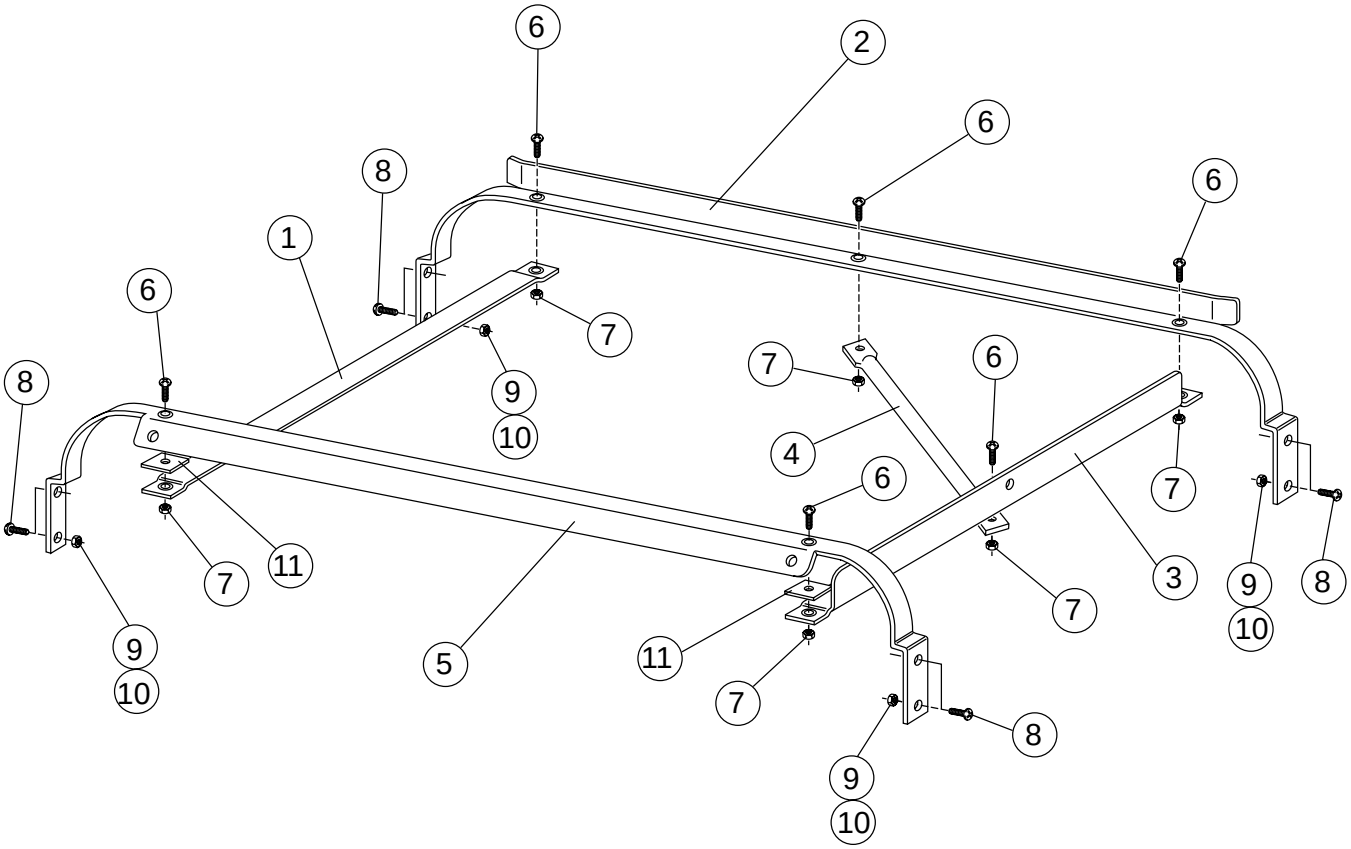

Figure 25 - MH-60/6N/6L
Track Assembly
(Corner configuration shown)

MH-60/6N/6L

TRACK ASSEMBLY

Fig. 25 Item No.	Part No.	Part Description	Qty.
1	0309469	GUIDE, RIGHT HAND	1
2	0309472	TRACK, REAR	1
3	0309468	GUIDE, LEFT HAND	1
4	0309470	SUPPORT, RACK	1
5	0309471	TRACK, FRONT	1
6	106727	SCREW (10-32 x 5/8 Flat Hd)	6
7	107966	NUT, GRIP (10-32 w/nylon insert)	6
8	100779	BOLT (1/4 -20 x 5/8 Truss Hd)	8
9	106482	WASHER, LOCK	8
10	100003	NUT (1/4-20 Hex Hd)	8
11	0309473	SPACER	2

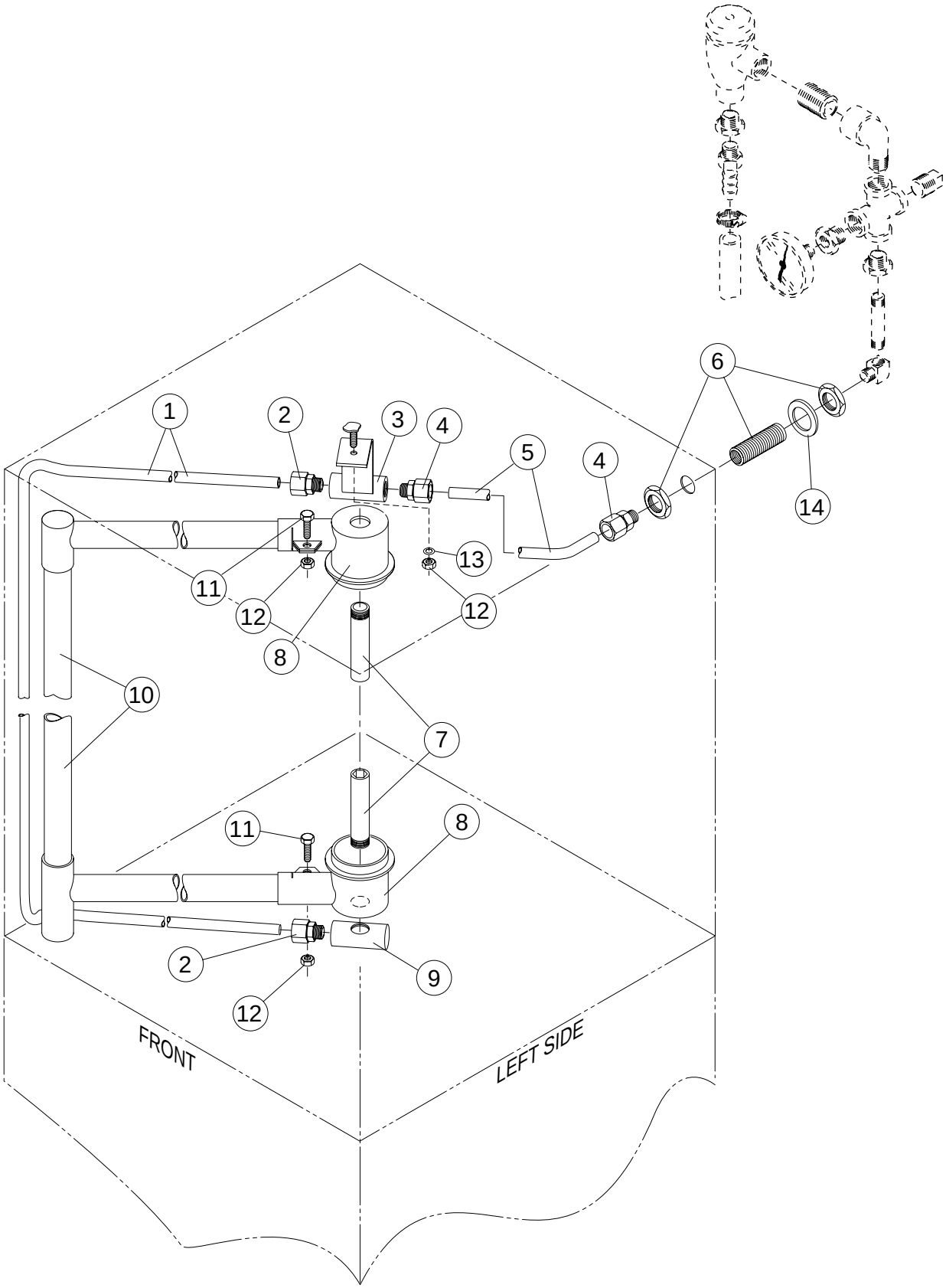

Figure 26 - MH-60/6N/6L
Wash/Rinse Spray Piping

MH-60/6N/6L

WASH/RINSE SPRAY PIPING

Fig. 26 Item No.	Part No.	Part Description	Qty.
1	0309444	RINSE TUBE	1
2	0509181	FITTING, STRAIGHT COMPRESSION	2
3	0509150	CONNECTOR, TOP RINSE	1
4	0509180	FITTING, STRAIGHT COMPRESSION	2
5	0309445	RINSE TUBE, TOP	1
6	0509179	FITTING, BULKHEAD 1/2"NPT	1
7	0507445	SPINDLE, WASH ARM	2
8	109864	SUPPORT, WASH ARM	2
9	0509178	CONNECTOR, BOTTOM RINSE	1
10	109781	STANDPIPE, WASH	1
11	100736	BOLT 1/4-20 X 3/4 HEX HEAD	2
12	107967	NUT, GRIP 1/4-20	1
13	106482	WASHER, SPLIT LOCK SST	2
14	0309350	WASHER	1

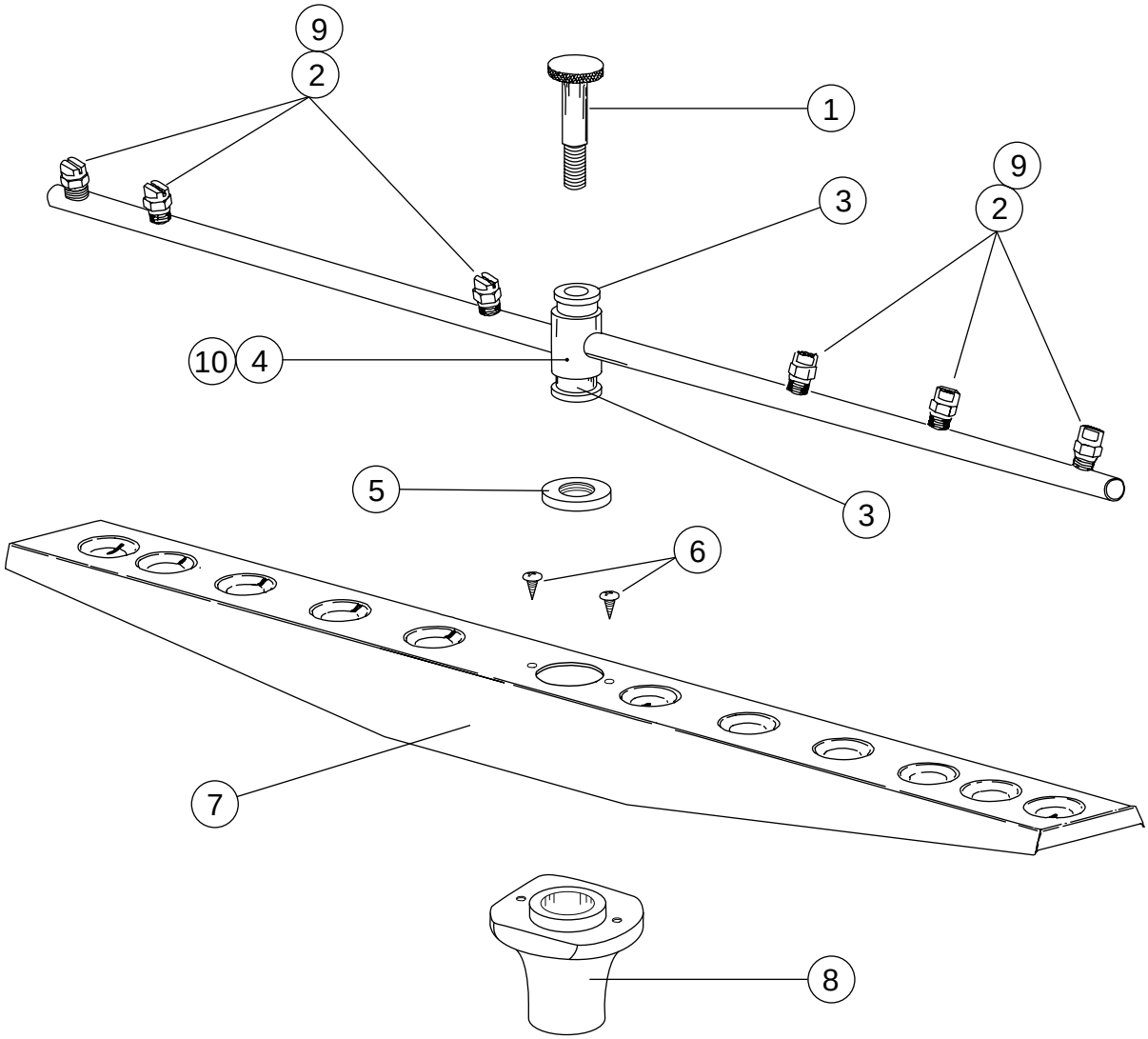

Figure 27 - MH-60/6N/6L
Wash/Rinse Spray Arms

MH-60/6N/6L

WASH/RINSE SPRAY ARMS

Fig. 27 Item No.	Part No.	Part Description	Qty.
1	0507443	SPINDLE, RINSE ARM	2
2	0508376	NOZZLE, RINSE ARM (MH-60, MH-6N only)	12
3	112164	BEARING, RINSE ARM	4
4	0707453	RINSE ARM ASSY. (Includes 2 & 3)	2
5	0507444	NUT, RINSE ARM	2
6	109835	SCREW (#8 X 1/2 PAN HD)	4
7	0707452-S	WASH ARM ASSY. (Includes 6 & 8)	2
8	0507446	BEARING,WASH ARM	2
9	0507451	NOZZLE RINSE ARM (SST) (Model MH-6L only)	12
10	0708899	RINSE ARM ASSY. (Model MH-6L only) (Includes 3 & 9)	1
—	0707450	RINSE ARM (Does not include items 2, 3 or 9)	
—	0707456	WASH ARM (Does not include item 8)	

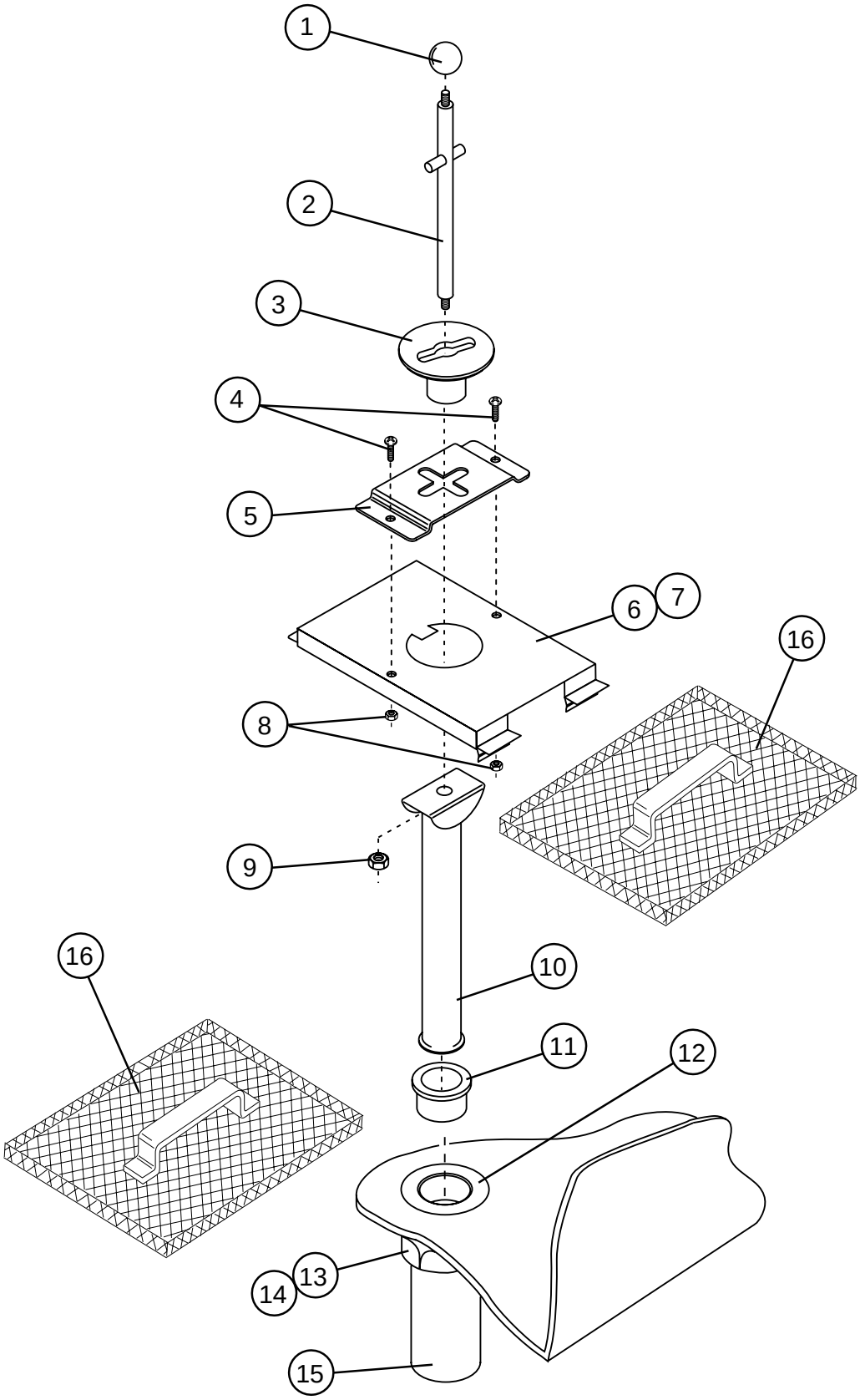

Figure 28 - MH-60/6N/6L
Drain Assembly and Scrap Screens

MH-60/6N/6L

DRAIN ASSEMBLY AND SCRAP SCREENS

Fig. 28 Item No.	Part No.	Part Description	Qty.
1	112393	KNOB, DRAIN LIFT	1
2	112394	ROD ASSY, DRAIN LIFT	1
3	112392	GUIDE, DRAIN LIFT	1
4	100097	SCREW (10-32 X 1/2" TRUSS HD)	2
5	322159	RETAINER, OVERFLOW	1
6	321939	FILLER, DRAIN PLATE (retained by spring clip)	1
7	322120	FILLER, DRAIN PLATE (retained by stud and nut) (Not shown)	1
8	100194	NUT, GRIP (10-32 SST)	2
9	100141	NUT , GRIP (1/4-20 SST)	1
10	322006	TUBE, OVERFLOW	1
11	107680	SEAT RUBBER, OVERFLOW TUBE	1
12	205813	DRAIN BASKET, MODIFIED	1
13	112044	SLIP NUT	1
14	112045	WASHER, TAILPIECE	1
15	107473	TAILPIECE	1
16	305164	SCREEN, SCRAP	2

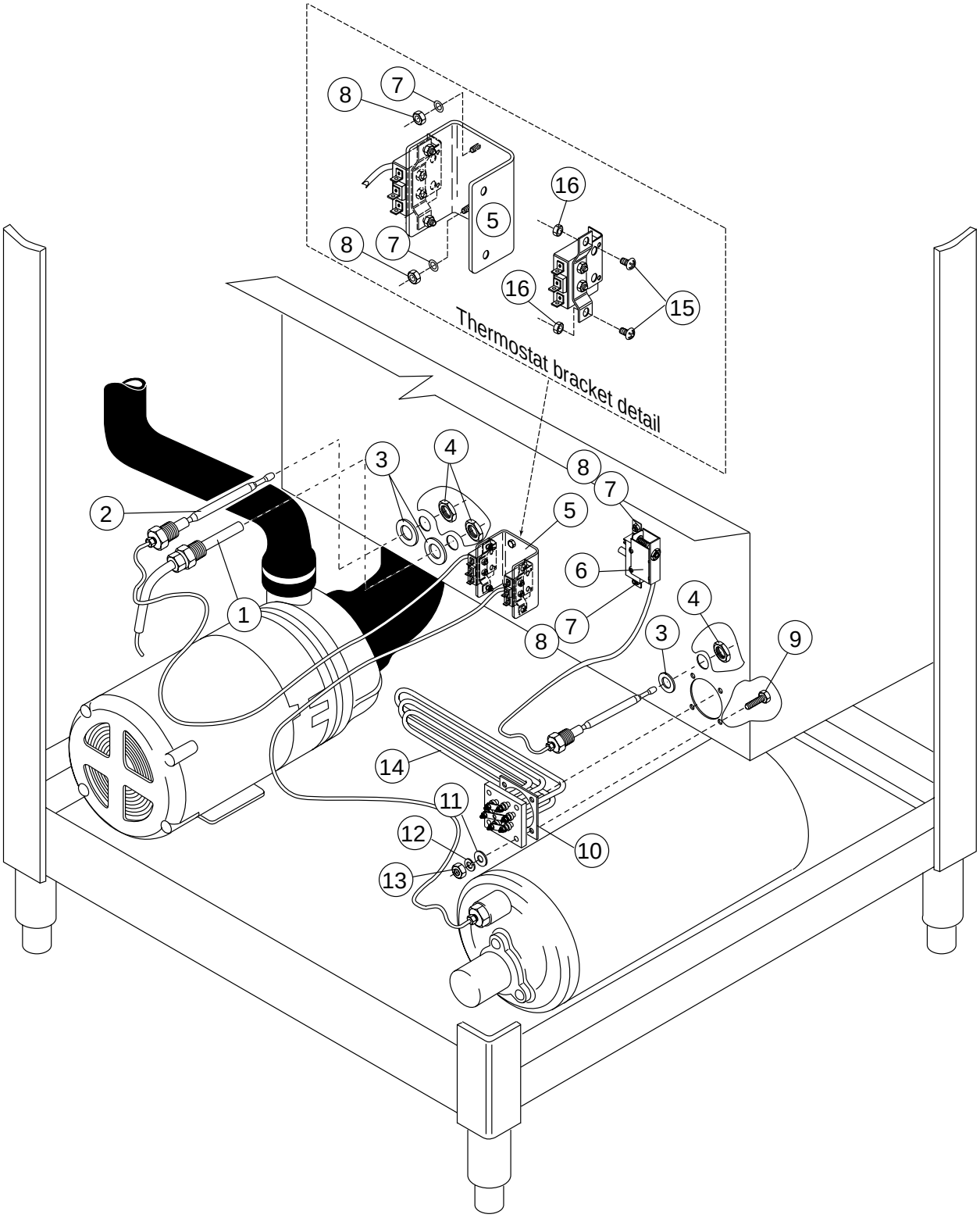

Figure 29 - MH-60/6N/6L
Wash Tank Heat and Thermostats

MH-60/6N/6L

WASH TANK HEAT AND THERMOSTATS

Fig. 29 Item No.	Part No.	Part Description	Qty.
1	108391	THERMOMETER 4 FT.	1
2	109069	THERMOSTAT W/CAP 110-220°F	1
3	201041	WASHER	3
4	201029	NUT, LOCK 1/2"	3
5	322076	DUAL THERMOSTAT BRACKET	1
6	110561	THERMOSTAT, FIXED HIGH LIMIT	1
7	106482	WASHER, LOCK 1/4 SPLIT SST	4
8	100003	NUT, PLAIN 1/4-20 SST	4
9	100740	BOLT 5/16-18 X 1 HEX HEAD	4
10	108345	GASKET 3 X 3-1/8 X 2"	1
11	102376	WASHER 5/16 X 3/4 X 1/16	8
12	106013	WASHER, LOCK 5/16 SPLIT	4
13	100154	NUT, PLAIN 5/16-18 SST	4
14	0509637	HEATER 3KW 115V/1PH	1
	0509185	HEATER 3KW 208-240/380-415V 1/3PH	1
	0509373	HEATER 3KW 460V/3PH	1
	0507707	HEATER 3KW 575V/3PH	1
15	100007	SCREW 10-32 X 3/8 TRUSS HEAD	4
16	107966	NUT, GRIP 10-32 W/NYLON INSERT	4

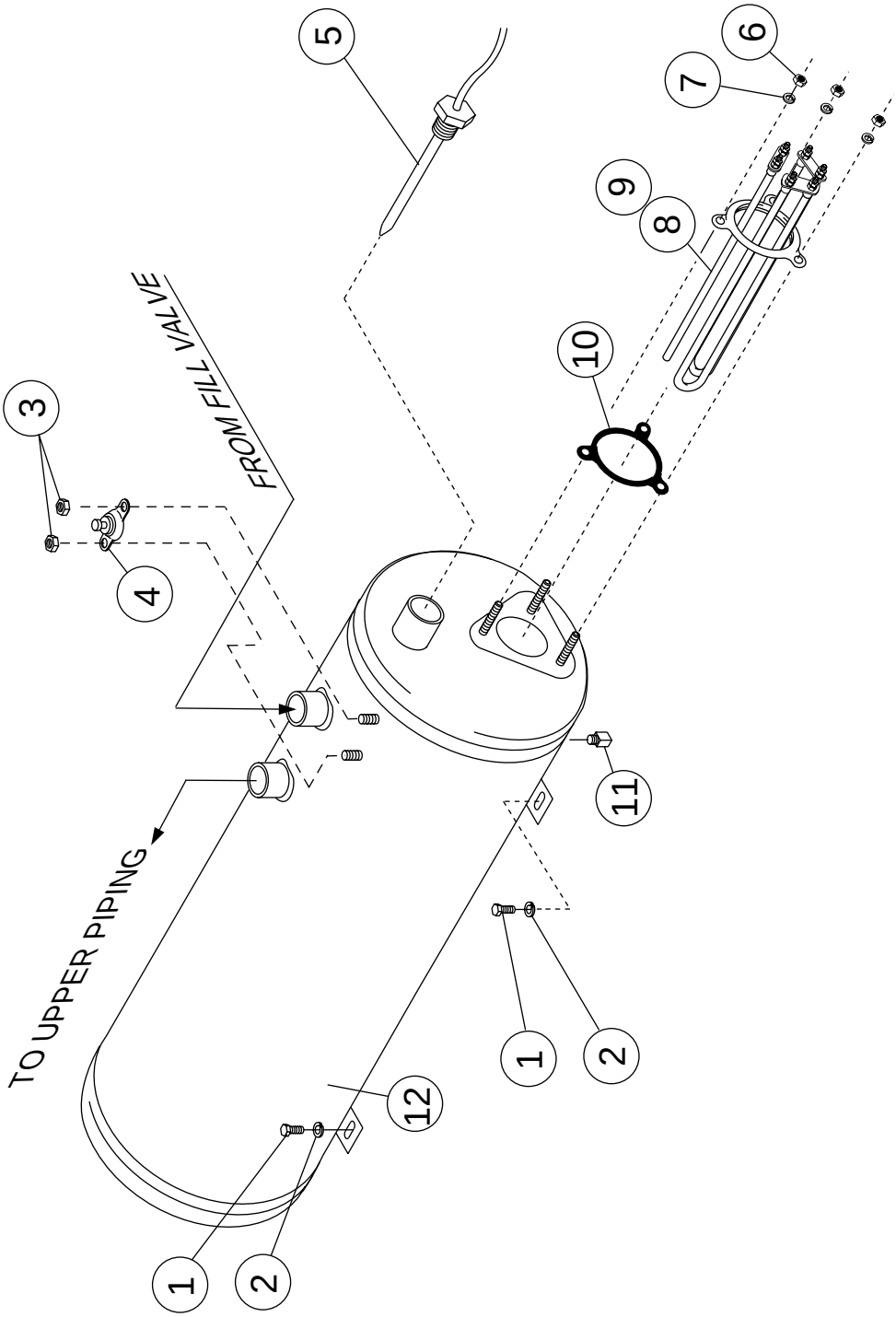

Figure 30- MH-60 Only
Electric Booster and Thermostats

MH-60 ONLY

ELECTRIC BOOSTER AND THERMOSTATS

Fig. 30 Item No.	Part No.	Part Description	Qty.
1	100740	BOLT 5/16-18 X 1 HEX HEAD	2
2	102376	WASHER, FLAT 5/16 X 3/4 X 1/16	2
3	108954	NUT, GRIP 6-32 W/INSERT	2
4	110562	THERMOSTAT, HIGH LIMIT	1
	110563	COMPOUND, HEAT SINK	A/R
5	109069	THERMOSTAT, BOOSTER	1
6	100003	NUT, PLAIN 1/4-20 SST	3
7	106482	WASHER, LOCK 1/4 SPLIT	3
8	111233	HEATER 9KW 208-240/380-415V, 40°RISE (1 & 3 phase)	1
	108579	HEATER 9KW 480V, 40°RISE (3 phase only)	1
	111122	HEATER 9KW 575V, 40°RISE (3 phase only)	1
9	111266	HEATER 18KW 208-240/380-415V, 70°RISE (1 & 3 phase)	1
	111267	HEATER 18KW 480V, 70°RISE (3 phase only)	1
	111600	HEATER 18KW 575V, 70°RISE (3 phase only)	1
10	109985	SEAL, ELECTRIC HEATER	1
11	100210	PLUG 1/8 SST	1
12	0509042	TANK, BOOSTER	1

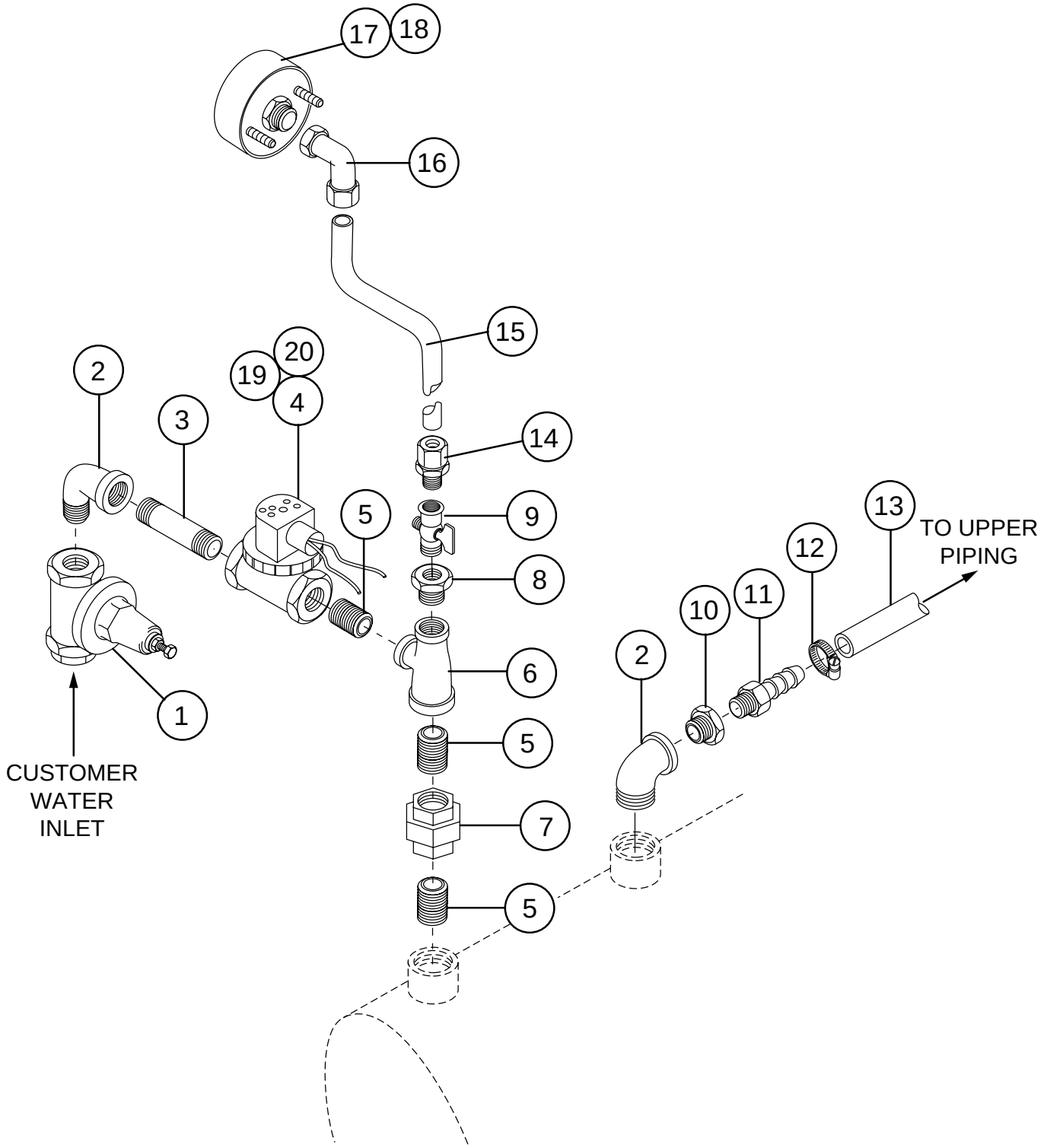

Figure 31 - MH-60 Only
Lower Fill Piping Assembly

MH-60 ONLY

LOWER FILL PIPING ASSEMBLY

Fig. 31 Item No.	Part No.	Part Description	Qty.
1	112387	LINE STRAINER/PRV COMBO	1
2	102444	STREET ELL 3/4" NPT BRASS	2
3	102651	NIPPLE 3/4" X 2" BRASS	1
4	111437	VALVE 3/4" NPT HOT WATER	1
5	100184	NIPPLE 3/4" NPT	3
6	102525	TEE 3/4" X 1/2" X 3/4" BRASS	1
7	100571	UNION 3/4" NPT BRASS	1
8	102388	BUSHING REDUCER 1/2" X 1/4" BRASS	1
9	112437	VALVE, NEEDLE 1/4"	1
10	100171	BUSHING REDUCER 3/4" X 1/2" BRASS	1
11	107419	BARB, HOSE 1/2 NPT X 1/2 HOSE	1
12	105994	CLAMP, HOSE	1
13	107417	HOSE, 1/2" I.D.	9ft.
14	107065	CONNECTOR, MALE 1/4" O.D. X 1/4 NPT	1
15	107928	TUBING, HIGH DENSITY	3ft.
16	111100	ELBOW, FEMALE 1/4" O.D. X 1/8 NPT	1
17	109812	GAUGE, PRESSURE 0-100 PSI	1
18	109816	OVERLAY, GAUGE 20-30 PSI	1
19	108516	COIL, SOLENOID VALVE (120V)	1
20	109903	KIT, REPAIR, 3/4" SOLENOID VALVE	1

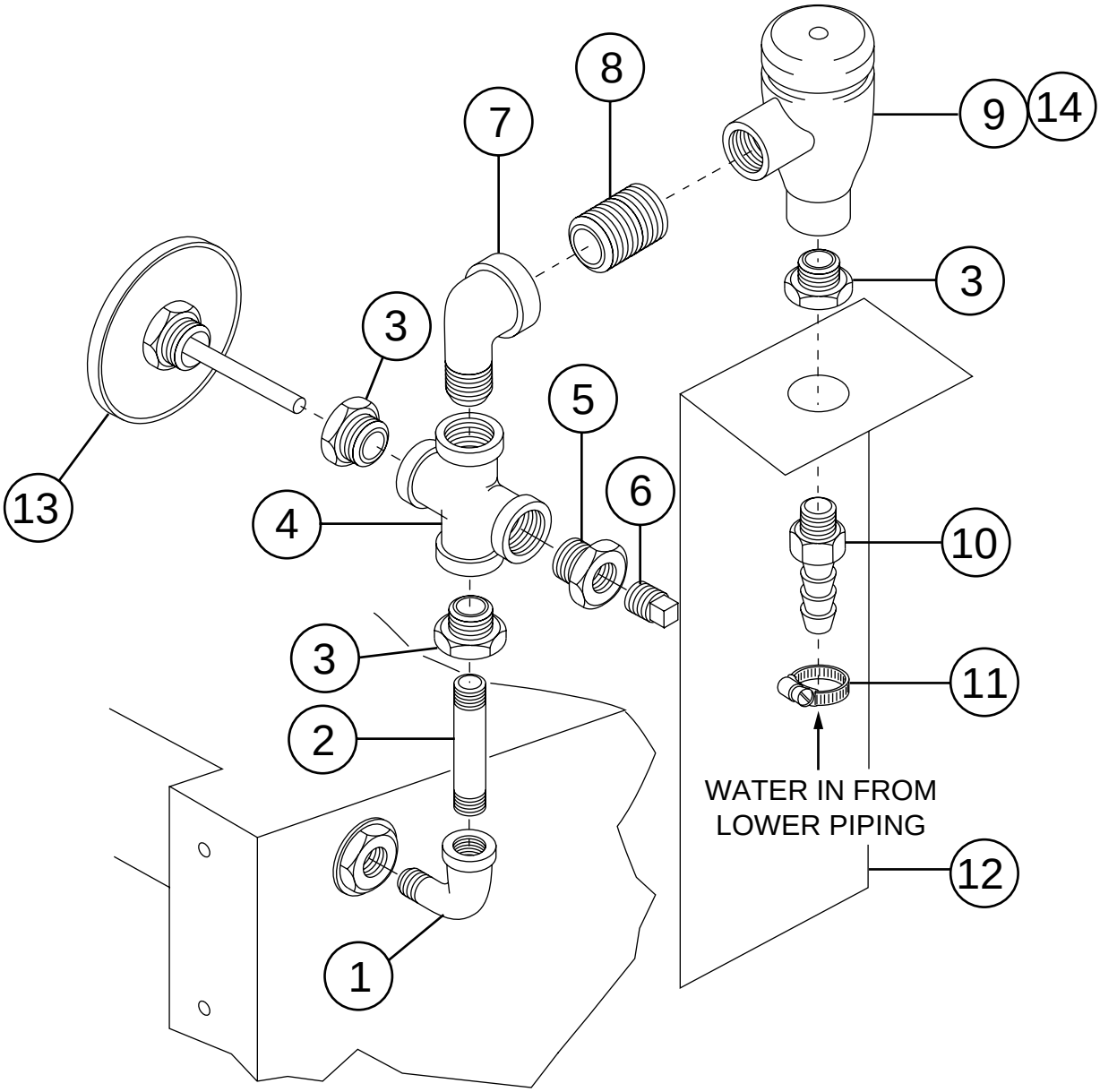

Figure 32 - MH-60/6N Only
Upper Fill Piping Assembly

MH-60/6N ONLY

UPPER FILL PIPING ASSEMBLY

Fig. 32 Item No.	Part No.	Part Description	Qty.
1	102438	ELBOW STREET, 1/2" NPT X 90° BRASS	1
2	102567	NIPPLE, 1/2" NPT X 3" BRASS	1
3	102392	BUSHING, REDUCER 3/4" NPT X 1/2" NPT BRASS	2
4	100599	CROSS 3/4" NPT BRASS	1
5	108181	BUSHING, REDUCER 3/4" X 1/4" NPT PLASTIC	1
6	107463	PLUG, 1/4" NPT PLASTIC	1
7	112430	ELBOW, STREET 3/4" X 90° BRASS	1
8	100184	NIPPLE, 3/4" NPT CLOSE BRASS	1
9	104429	VACUUM BREAKER, 3/4" NPT BRASS	1
10	107419	BARB, HOSE 1/2 NPT X 1/2 HOSE	1
11	105994	CLAMP, HOSE	1
12	0309426	BRACKET, PLUMBING SUPPORT	1
13	112410	THERMOMETER, FINAL RINSE, 2" STEM	1
14	108351	KIT, REPAIR, 3/4" VACUUM BREAKER	1

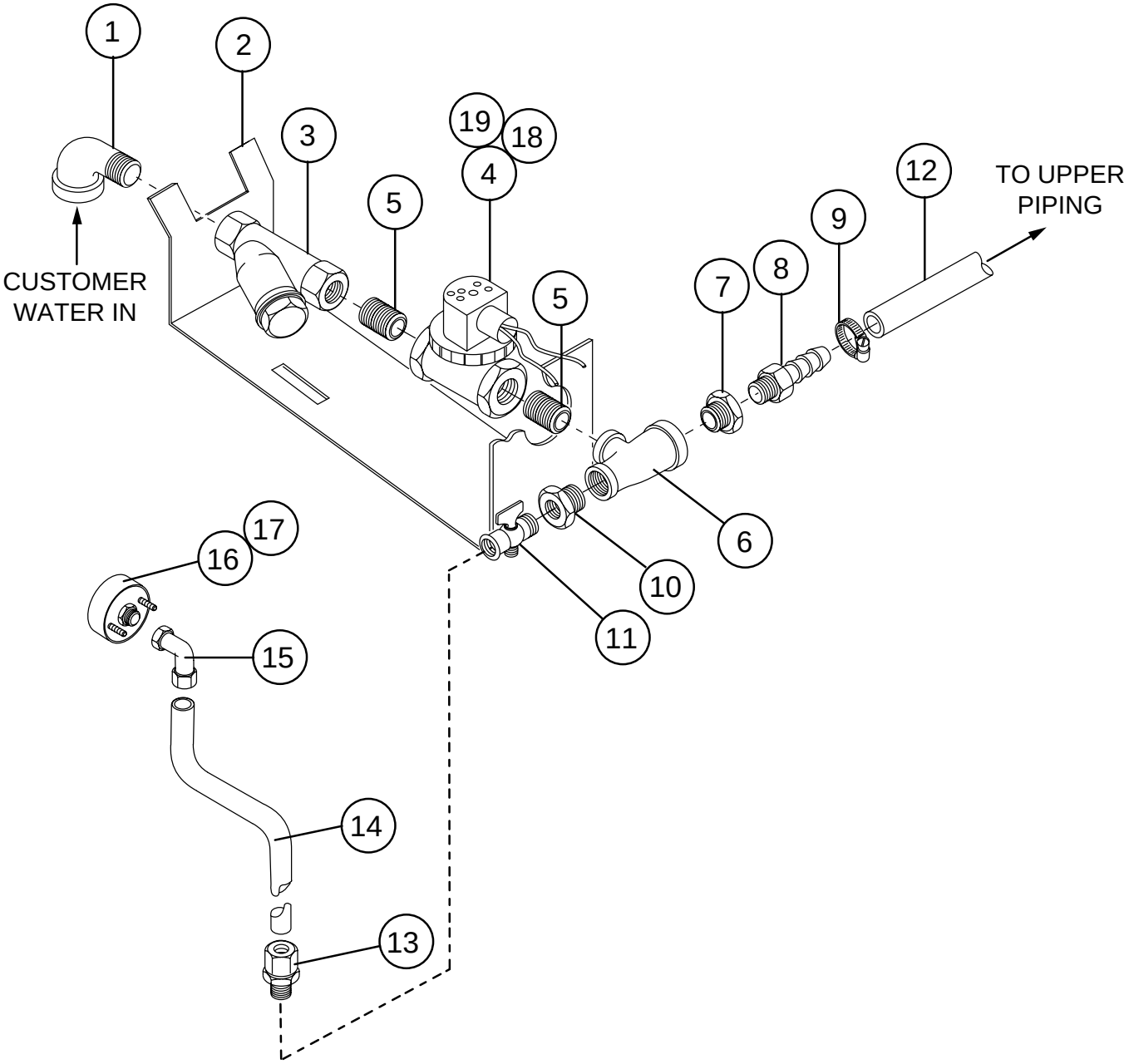

Figure 33 - MH-6N/6L Only
Lower Fill Piping Assembly

MH-6N/6L ONLY

LOWER FILL PIPING ASSEMBLY

Fig. 33 Item No.	Part No.	Part Description	Qty.
1	102444	ELBOW, STREET X 90° BRASS	1
2	0309340	BRACKET, PLUMBING SUPPORT	1
3	110768	LINE STRAINER, 3/4" BRASS	1
4	111437	VALVE 3/4" NPT HOT WATER	1
5	100184	NIPPLE 3/4" NPT	2
6	102525	TEE 3/4" X 1/2" X 3/4" BRASS	1
7	100171	BUSHING, REDUCER 3/4" X 1/2" BRASS	1
8	107419	BARB, HOSE 1/2 NPT X 1/2 HOSE	1
9	105994	CLAMP, HOSE	1
10	102388	BUSHING, REDUCER 1/2" X 1/4" BRASS	1
11	112437	VALVE, NEEDLE 1/4"	1
12	107417	HOSE, 1/2" I.D.	9ft.
13	107065	CONNECTOR, MALE 1/4" O.D. X 1/4 NPT	1
14	107928	TUBING, HIGH DENSITY	3ft.
15	111100	ELBOW, FEMALE 1/4" O.D. X 1/8 NPT	1
16	109812	GAUGE, PRESSURE 0-100 PSI	1
17	109816	OVERLAY, GAUGE 20-30 PSI	1
18	108516	COIL, SOLENOID VALVE (120V)	1
19	109903	KIT, REPAIR, 3/4" SOLENOID VALVE	1

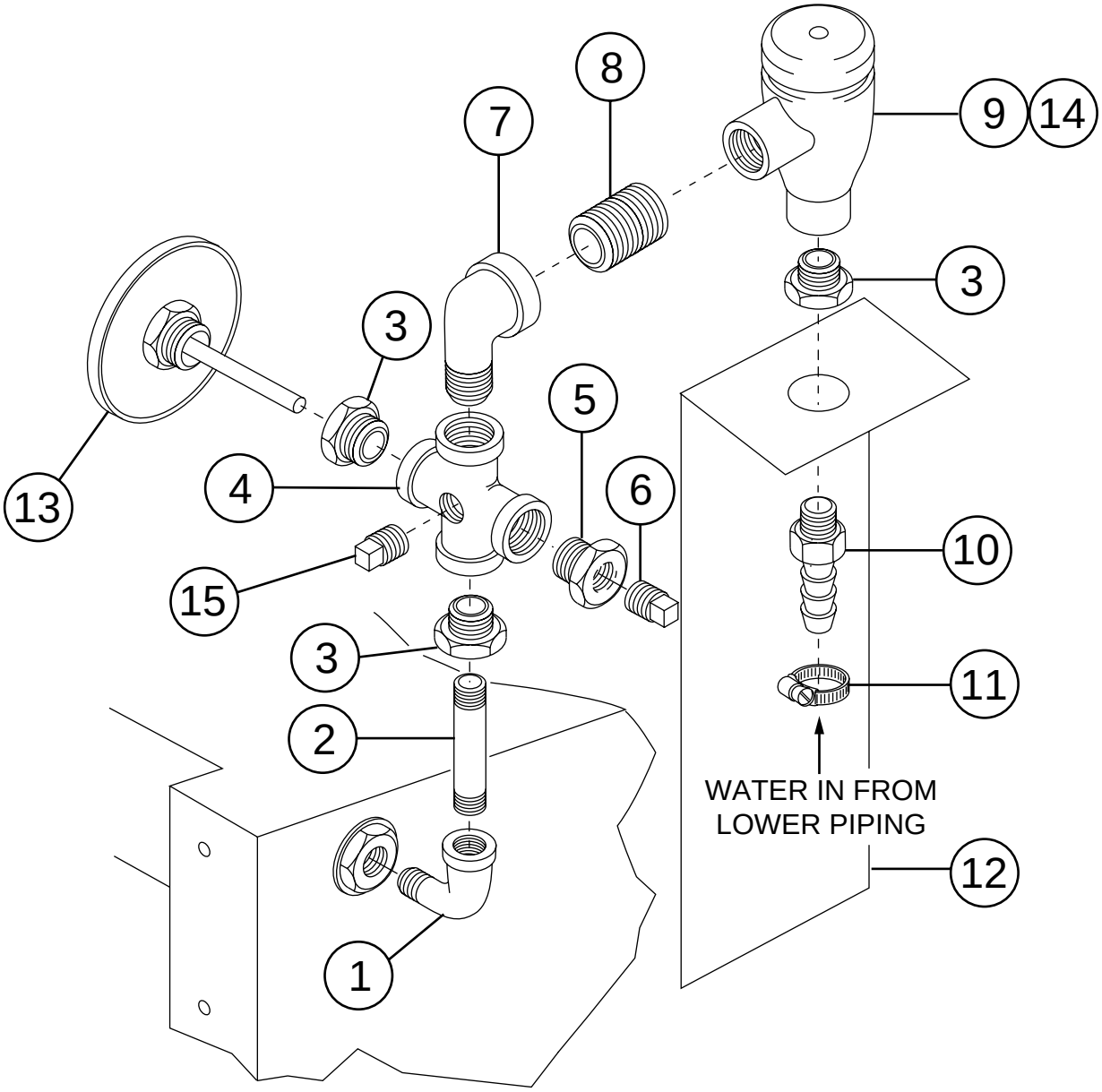

Figure 34 - MH-6L Only
Upper Fill Piping Assembly

MH-6L ONLY

UPPER FILL PIPING ASSEMBLY

Fig. 34 Item No.	Part No.	Part Description	Qty.
1	102438	ELBOW STREET, 1/2" NPT X 90° BRASS	1
2	102567	NIPPLE, 1/2" NPT X 3" BRASS	1
3	102392	BUSHING, REDUCER 3/4" NPT X 1/2" NPT BRASS	2
4	0309529	CROSS, MODIFIED 3/4" NPT BRASS	1
5	108181	BUSHING, REDUCER 3/4" X 1/4" NPT PLASTIC	1
6	107463	PLUG, 1/4" NPT PLASTIC	1
7	112430	ELBOW, STREET 3/4" X 90° BRASS	1
8	100184	NIPPLE, 3/4" NPT CLOSE BRASS	1
9	104429	VACUUM BREAKER, 3/4" NPT BRASS	1
10	107419	BARB, HOSE 1/2 NPT X 1/2 HOSE	1
11	105994	CLAMP, HOSE	1
12	0309426	BRACKET, PLUMBING SUPPORT	1
13	104682	THERMOMETER, FINAL RINSE, 2" STEM	1
14	108351	KIT, REPAIR, 3/4" VACUUM BREAKER	1
15	107424	PLUG, 1/8" NPT, PLASTIC	1

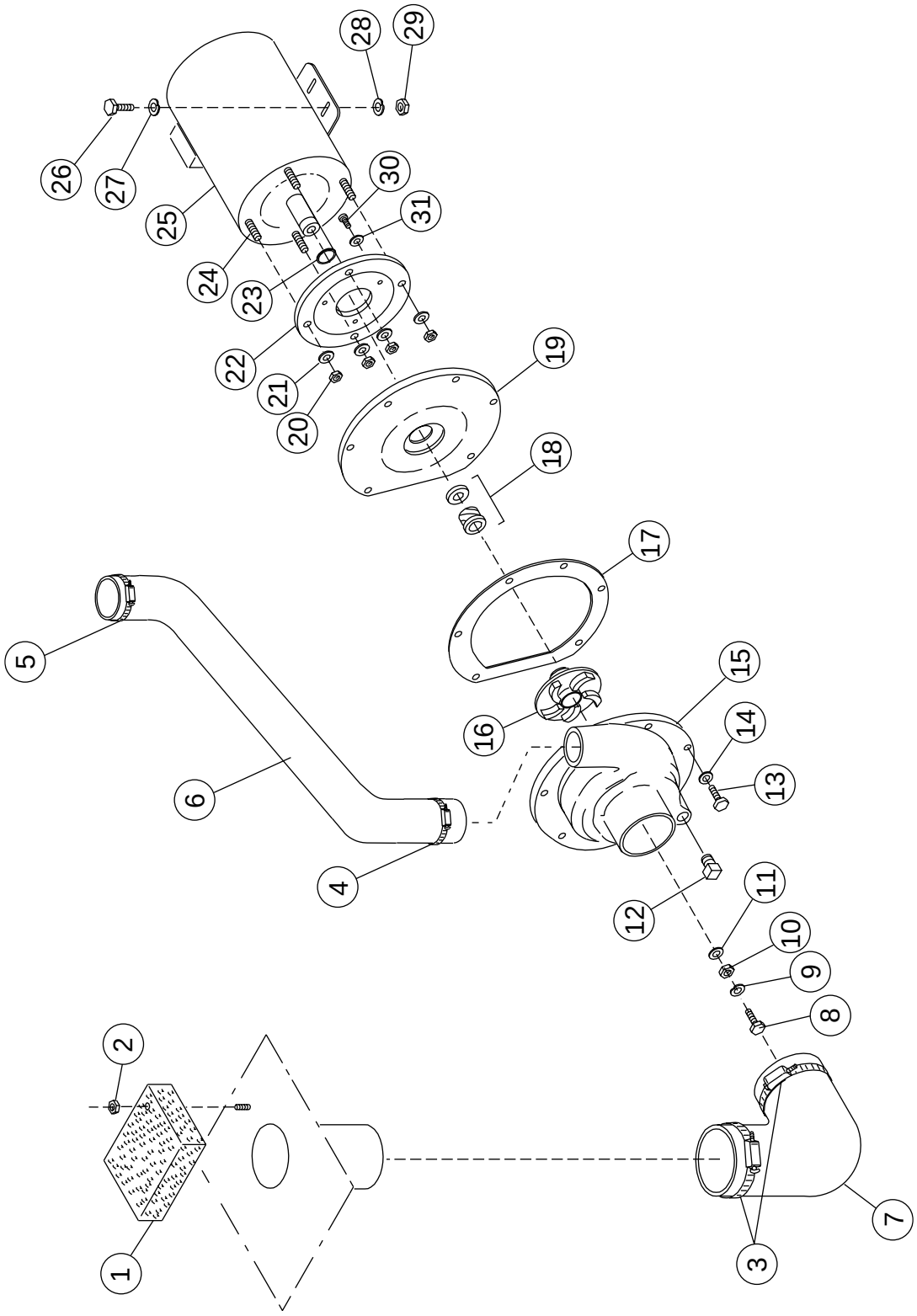

Figure 35 - MH-60/6N/6L
Pump Assembly

MH-60/6N/6L

PUMP ASSEMBLY

Fig. 35 Item No.	Part No.	Part Description	Qty.
1	308005	STRAINER	1
2	107966	NUT, GRIP 10-32 W/NYLON INSERT	1
3	104203	CLAMP, HOSE	2
4	104165	CLAMP, HOSE	1
5	107340	CLAMP, HOSE	1
6	112383	HOSE PUMP DISCHARGE	1
7	109562	HOSE, SUCTION	1
8	100734	BOLT 1/4-20 X 1/2" HEX HEAD	1
9	106482	WASHER, LOCK 1/4" SPLIT	1
10	110247	NUT, HEX JAM 7/16-20	1
11	110248	WASHER, FLAT	1
12	107463	PLUG 1/4"	1
13	107137	BOLT 10-32 X 7/8 HEX HEAD	11
14	0501505	WASHER, LOCK	11
15	109651	VOLUTE	1
16	111143	IMPELLER	1
17	109653	GASKET, O-RING	1
18	111111	PUMP SEAL	1
19	109649	BACK PUMP HOUSING	1
20	107690	NUT, JAM 3/8-16	4
21	106407	WASHER, LOCK 3/8" SPLIT	4
22	204460	BACKING PLATE, MACHINED	1
23	109654	PUMP SLINGER WASHER	1
24	110734	STUD 3/8-16 X 1 3/8	4
25	111145	MOTOR 1.4HP (208-240V/ 460V/60/3)	1
	111144	MOTOR 1.4HP (115V/208-240V/60/1)	1
	0507708	MOTOR 1.4HP (575V/60V3PH)	1
26	100739	BOLT 5/16-18 X 3/4 HEX HEAD	4
27	102376	WASHER, FLAT 5/16	4
28	106013	WASHER, LOCK 5/16-18 SST	4
29	100142	NUT, GRIP 5/16-18	4
30	100754	SCREW, FLAT 10-32 X 1/2"	4
31	110270	WASHER, COUNTERSUNK SST	4
—	109645	KIT, PUMP (INCLUDES 15,17,19)	1
—	451643	PUMP/MOTOR ASSEMBLY COMPLETE 1.4HP(208-240V/460V/60/3PH)	1
—	451642	PUMP/MOTOR ASSEMBLY COMPLETE 1.4HP(115V/208-240V/60/1PH)	1
—	0707549	PUMP/MOTOR ASSEMBLY COMPLETE 1.4HP(575V/60/3PH)	1

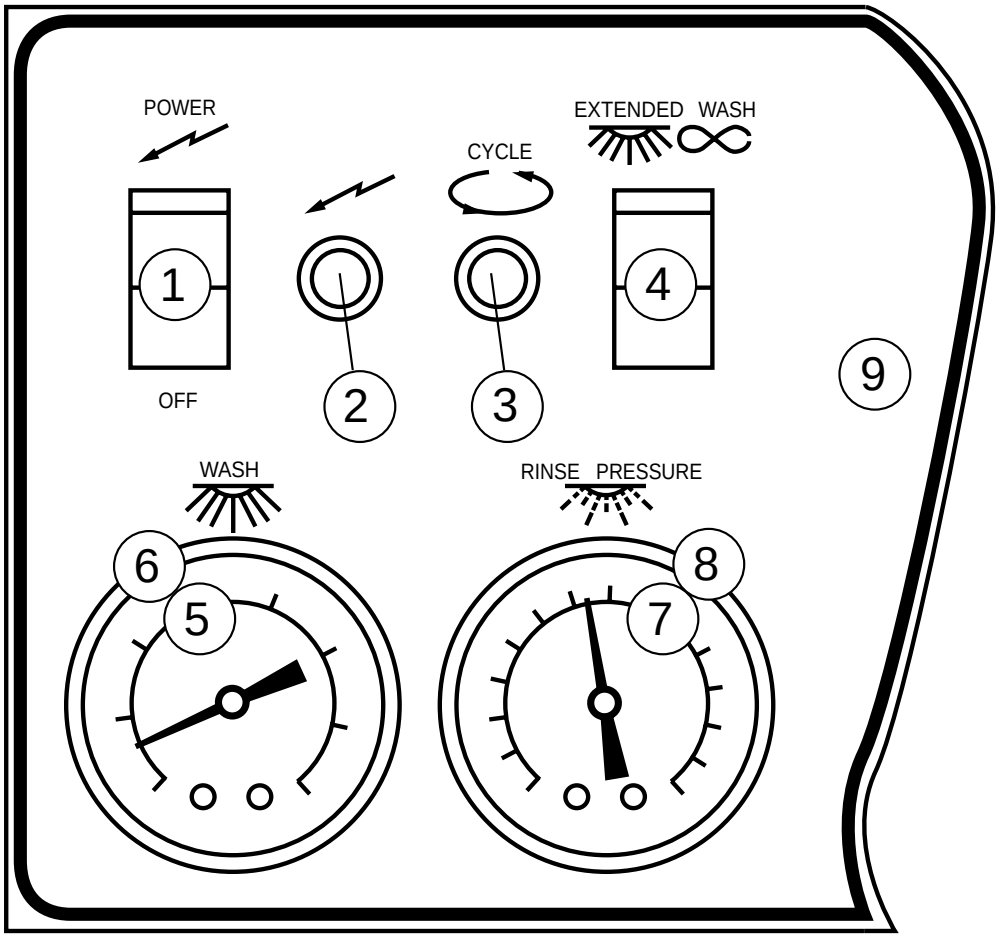

Figure 36 - MH-60/6N/6L
Control Panel and Gauges

MH-60/6N/6L

CONTROL PANEL AND GAUGES

Fig. 36 Item No.	Part No.	Part Description	Qty.
1	0501361	SWITCH, ON-OFF	1
2	112390	LITE, RED (POWER)	1
3	112391	LITE, AMBER (In-Cycle)	1
4	0501361	SWITCH, EXTENDED WASH	1
5	108391	THERMOMETER, 4 FT	1
6	112086	OVERLAY, WASH 150°F (MH-60/6N)	1
	112093	OVERLAY, WASH 120°F (MH-6L Only)	1
7	109812	GAUGE, PRESSURE 0-100 PSI	1
8	109816	OVERLAY, 20-30 PSI	1
9	112388	DECAL, CONTROL PANEL	1

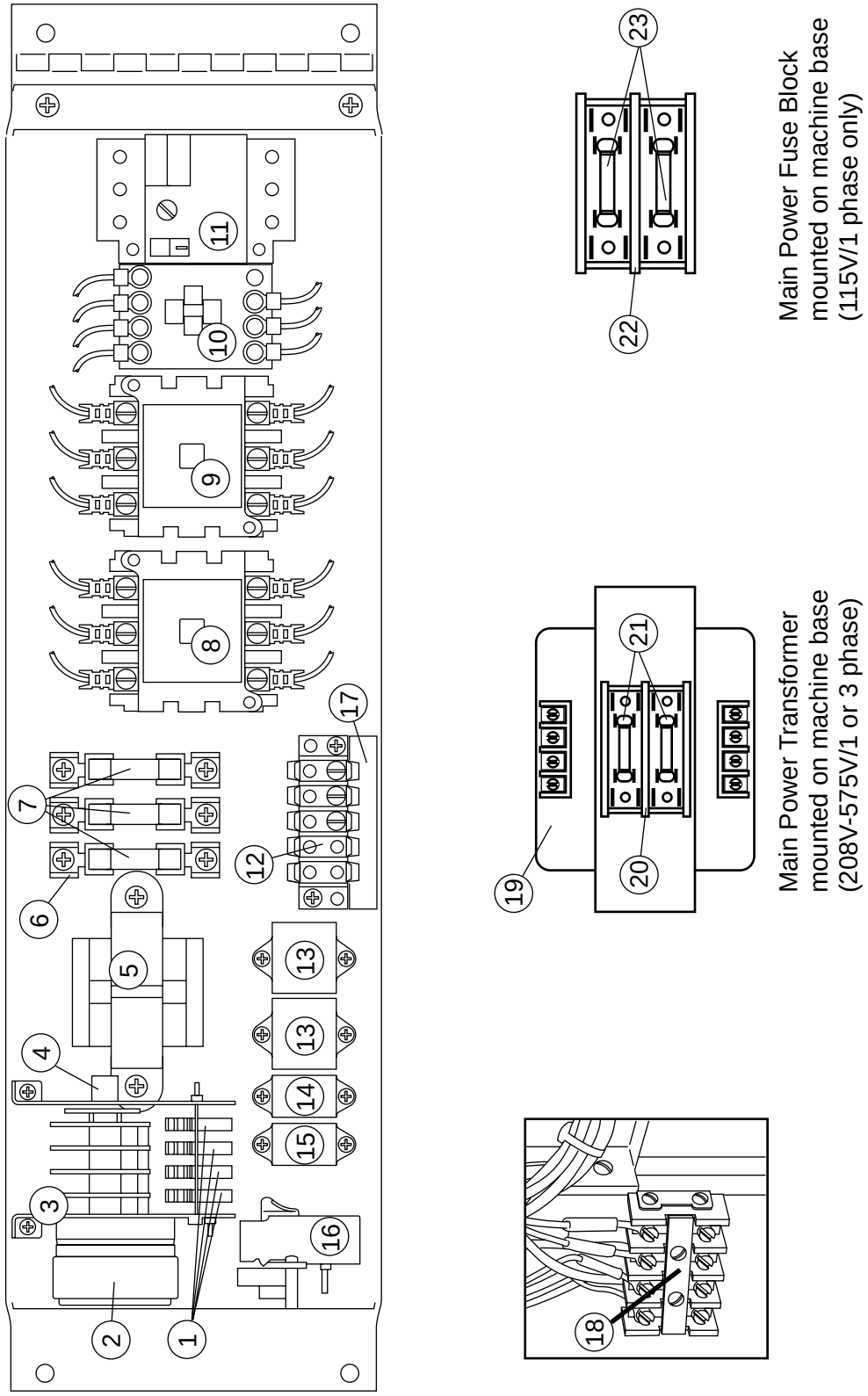

Figure 37 - MH-60/6N/6L
Control Cabinet

MH-60/6N/6L

CONTROL CABINET

Fig. 37 Item No.	Part No.	Part Description	Qty.
1	0501379	Switch, timer	4
2	0508773	Motor, timer	1
3	0709633	Assembly, timer (includes Items 1, 2, 4)	1
4	0503701	Bearing, timer	1
5	111277	Transformer (120V : 24V)	1
6	106925	Block, fuse (30A, 3 pole)	1
7	0508675	Fuse, 10A ((MH60) 208-240V/3	3
7	100906	Fuse, 5A (MH60) 480V/3	3
7	100913	Fuse, 10A (MH60) 380-415V/3	3
7	100906	Fuse, 5A (MH60) 575/3	3
7	0508675	Fuse, 10A (MH6L, 6N) 208-240V/3	3
7	100913	Fuse, 10A (MH6L, 6N) 380-415V/3	3
7	100906	Fuse, 5A (MH6L, 6N) 480V/3	3
7	0508676	Fuse, 30A (MH6L, 6N) 115V/1	2
7	107384	Fuse, 20A (MH6L, MH6N) 208-240V/1	2
8	111904	Contactor, booster heater (40A, 3 pole) (MH60 Only)	1
9	111904	Contactor, wash tank heater (40A, 3 pole) (All Models)	1
10	111642	Contactor, 1.4 HP Wash motor (12A 3 pole) (All Models)	1
11	112691	Overload, motor 1.4 HP Wash (All Models) 208-240V/3	1
11	111626	Overload, motor 1.4 HP Wash (All Models) 480V/3	1
11	111627	Overload, motor 1.4 HP Wash (All Models) 380-415V/3	1
11	112692	Overload, motor 1.4 HP Wash (All Models) 575V/3	1
11	111632	Overload, motor 1.4 HP Wash (MH6L, 6N) 115V/1	1
11	111630	Overload, motor 1.4 HP Wash (MH6L, 6N) 208-240V/1	1
12	107366	Board, terminal	1
13	112382	Relay (3PDT, 10A, 120VAC coil)	2
14	111068	Relay (2PDT, 10A 120VAC coil)	1
15	111067	Relay (2PDT, 10A 24VAC coil)	1
16	0508469	Fill timer assembly	1
17	0509564	Label, chemical connections	1
18	0509527	Block, terminal (4 pole) (Main Power)	1
19	109064	Transformer (208-240V/1 and 3HP/480V/3PH)	1
19	111464	Transformer (380-415V/3PH)	1
19	111521	Transformer (575V/3PH)	1
20	112424	Kit, fuse block (2 pole) (208-240V/1-3PH, 380-415V/3PH, 480V/3PH, 575V/3PH)	1
21	112482	Fuse, 3.5A 600V (ATDR) 208-240V 1 and 3PH	2
21	112483	Fuse, 1.8A 600V (ATDR) 380-415V/3PH	2
21	112484	Fuse, 1.5A 600V (ATDR) 480V/3PH	2
21	112485	Fuse, 1.25A 600V (ATDR) 575V/3PH	2
22	106402	Block, fuse (2 pole) (115V Only)	1
23	107289	Fuse, 2.5A 250V (ATDR) 115V Only	2
—	103309	Wire lug, ground (Not shown)	1

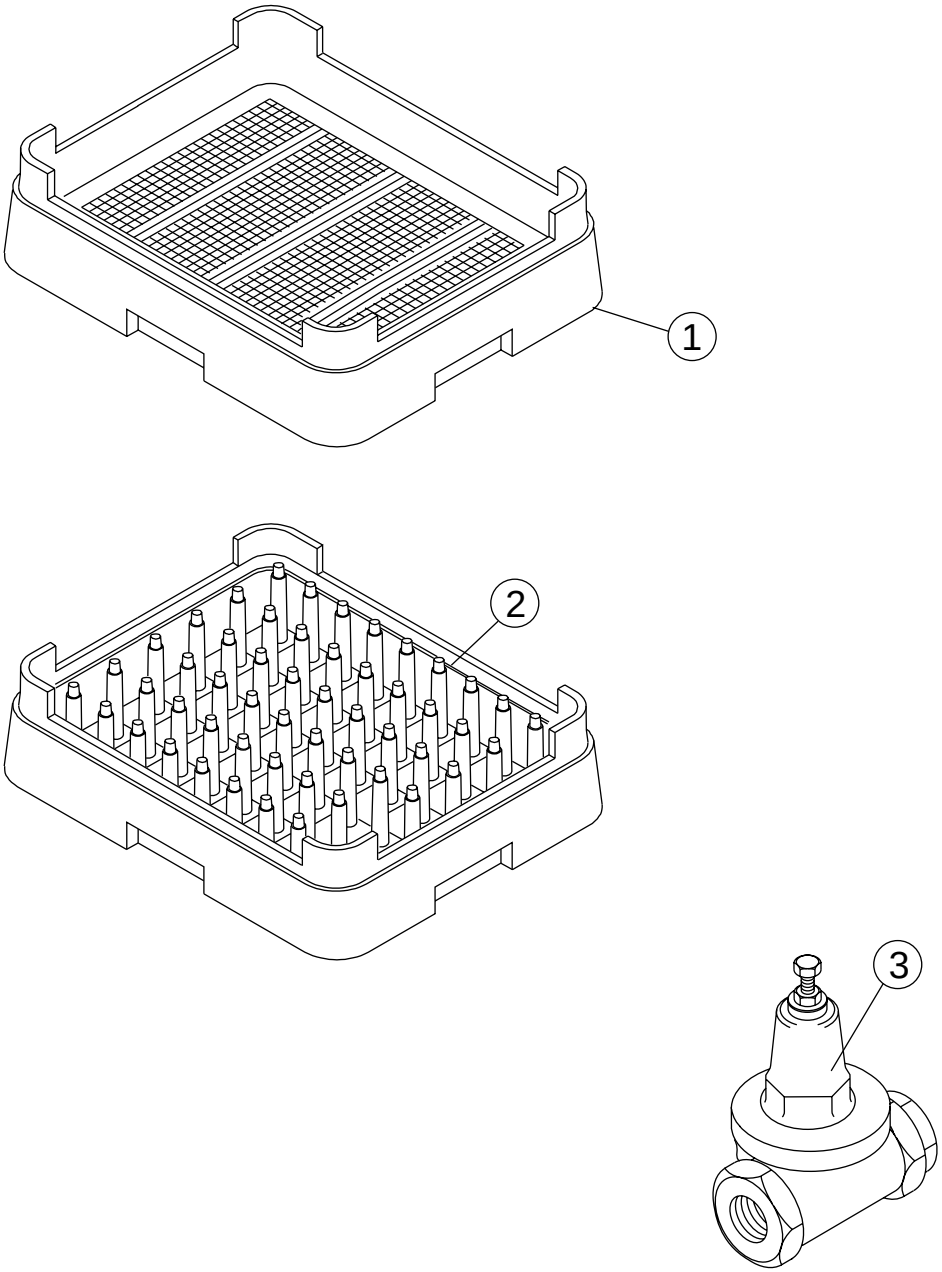

Figure 38 -
Dishracks and PRV

DISHRACKS AND PRV

Fig. 38 Item No.	Part No.	Part Description	Qty.
1	101273	RACK, (Flat Bottom)	1
2	101285	RACK, (PEG)	1
3	112387	LINE STRAINER/PRV COMBO	1

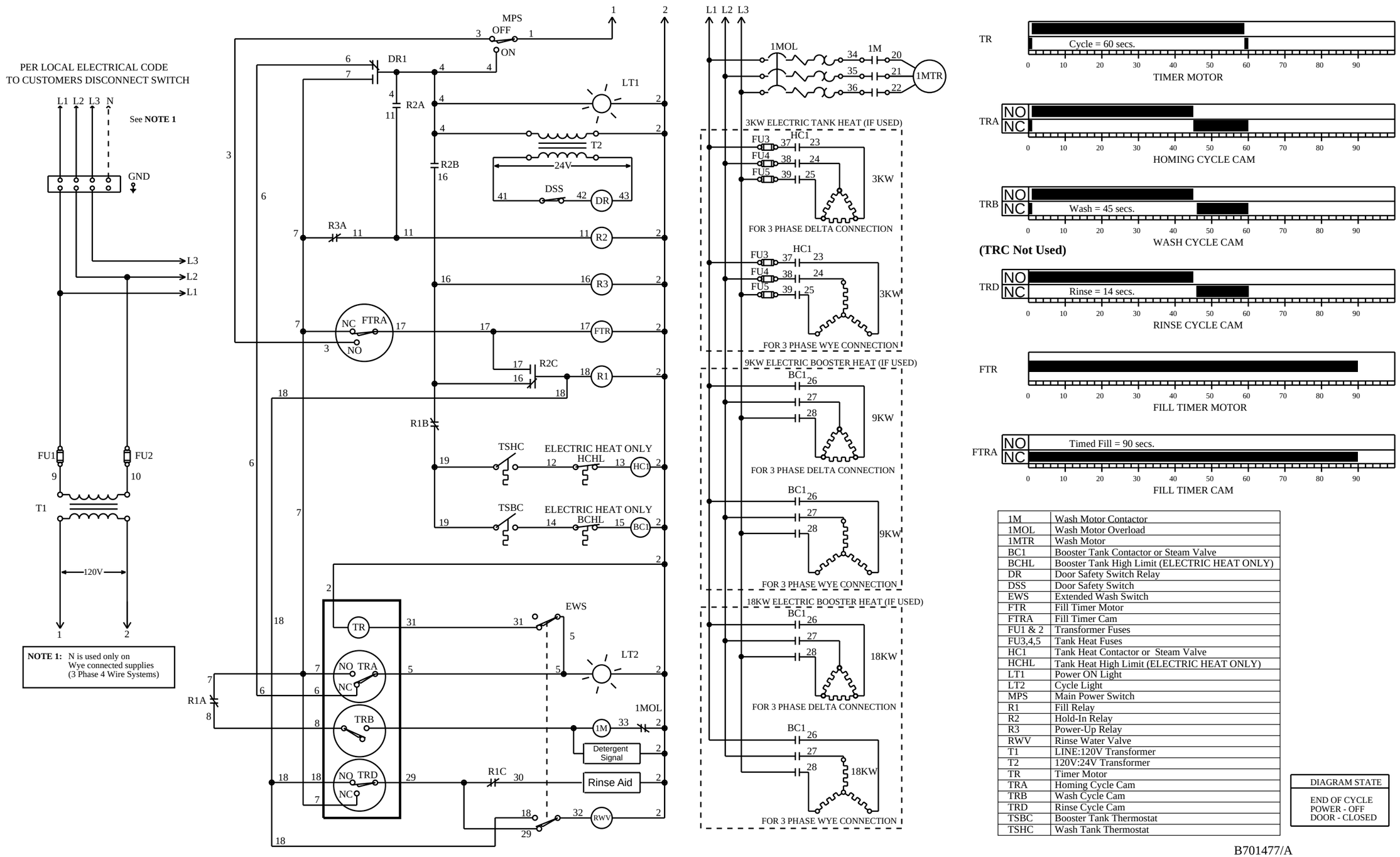

1M	Wash Motor Contactor
1MOL	Wash Motor Overload
1MTR	Wash Motor
BC1	Booster Tank Contactor or Steam Valve
BCHL	Booster Tank High Limit (ELECTRIC HEAT ONLY)
DR	Door Safety Switch Relay
DSS	Door Safety Switch
EWS	Extended Wash Switch
FTR	Fill Timer Motor
FTRA	Fill Timer Cam
FU1 & 2	Transformer Fuses
FU3,4,5	Tank Heat Fuses
HC1	Tank Heat Contactor or Steam Valve
HCHL	Tank Heat High Limit (ELECTRIC HEAT ONLY)
LT1	Power ON Light
LT2	Cycle Light
MPS	Main Power Switch
R1	Fill Relay
R2	Hold-In Relay
R3	Power-Up Relay
RWV	Rinse Water Valve
T1	LINE:120V Transformer
T2	120V:24V Transformer
TR	Timer Motor
TRA	Homing Cycle Cam
TRB	Wash Cycle Cam
TRD	Rinse Cycle Cam
TSBC	Booster Tank Thermostat
TSHC	Wash Tank Thermostat

DIAGRAM STATE
END OF CYCLE POWER - OFF DOOR - CLOSED

Figure 39 - Electrical Schematic / 3 Phase (MH-60, 6N, 6L)

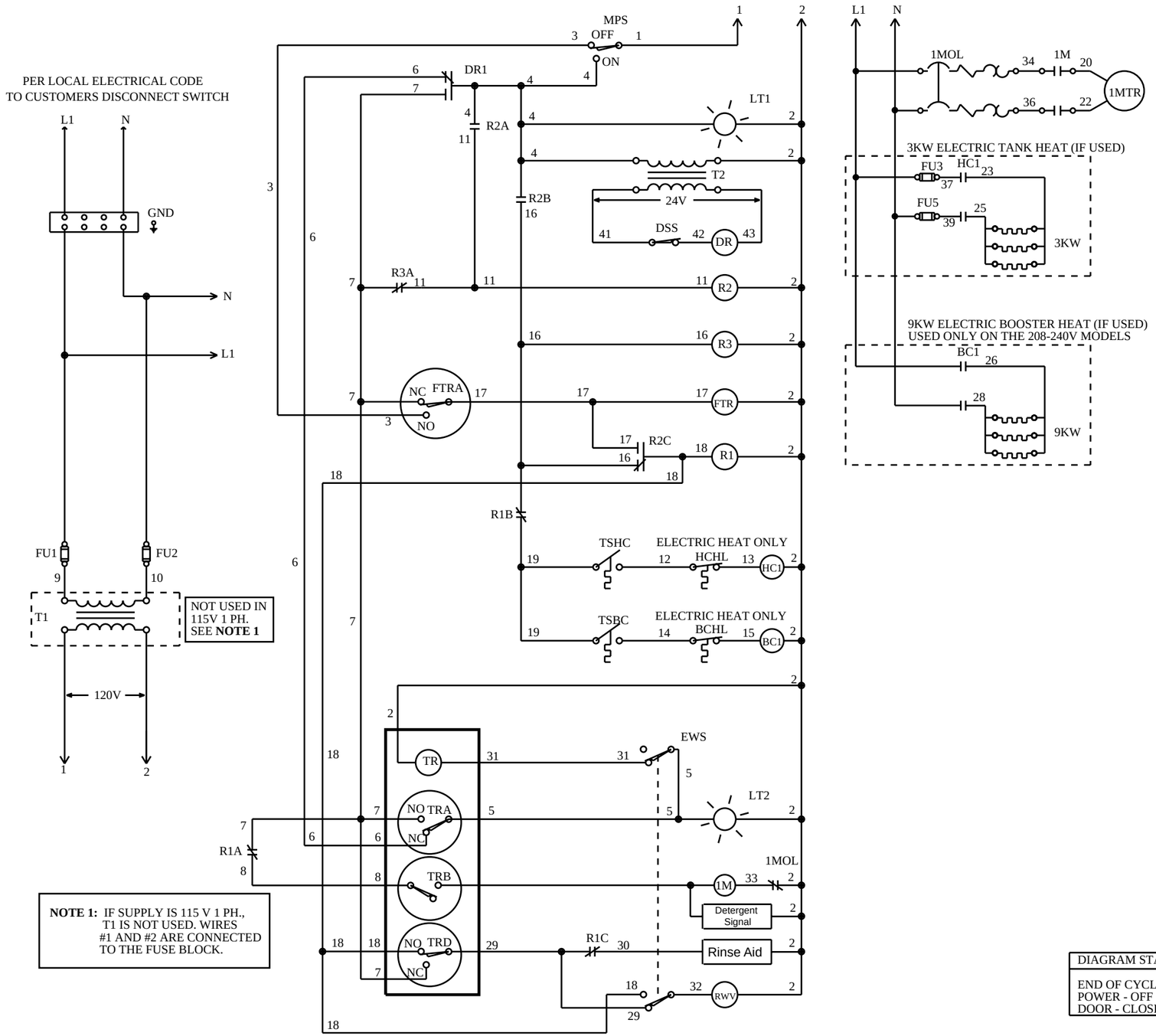

NOTE 1: IF SUPPLY IS 115 V 1 PH., T1 IS NOT USED. WIRES #1 AND #2 ARE CONNECTED TO THE FUSE BLOCK.

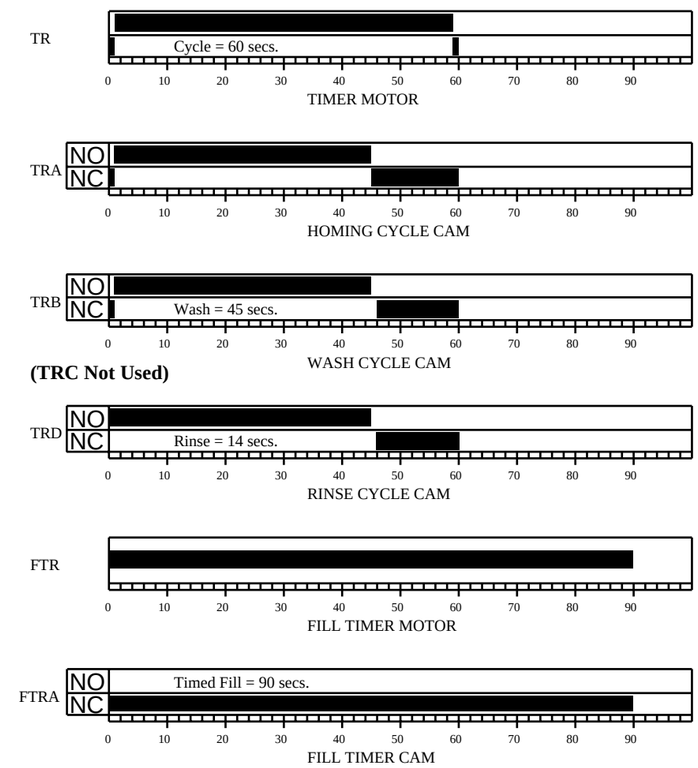

DIAGRAM STATE
END OF CYCLE POWER - OFF DOOR - CLOSED

1M	Wash Motor Contactor
1MOL	Wash Motor Overload
1MTR	Wash Motor
BC1	Booster Tank Contactor or Steam Valve
BCHL	Booster Tank High Limit (ELECTRIC HEAT ONLY)
DR	Door Safety Switch Relay
DSS	Door Safety Switch
EWS	Extended Wash Switch
FTR	Fill Timer Motor
FTRA	Fill Timer Cam
FU1 & 2	Transformer Fuses
FU3,4,5	Tank Heat Fuses
HC1	Tank Heat Contactor or Steam Valve
HCHL	Tank Heat High Limit (Electric Heat ONLY)
LT1	Power ON Light
LT2	Cycle Light
MPS	Main Power Switch
R1	Fill Relay
R2	Hold-In Relay
R3	Power-Up Relay
RWV	Rinse Water Valve
T1	LINE:120V Transformer
T2	120V:24V Transformer
TR	Timer Motor
TRA	Homing Cycle Cam
TRB	Wash Cycle Cam
TRD	Rinse Cycle Cam
TSBC	Booster Tank Thermostat
TSHC	Wash Tank Thermostat

B701478/A

Figure 40 - Electrical Schematic / 1 Phase (MH-60, 6N, 6L)