MOYER DIEBEL

Installation/Operation Manual with Service Replacement Parts

201HT

401HT

501HT

Undercounter Dishwashers

(with pumped final rinse)

Models:

201HT	*High temperature w/booster*
201HTN	*High temperature w/o booster*
201LT	*Low temperature chemical sanitizing*
401HT	*High temperature w/booster*
401HTN	*High temperature w/o booster*
501HT	*High temperature w/booster*
501HTN	*High temperature w/o booster*
501LT	*Low temperature chemical sanitizing*

Dishwasher serial no.

www.moyerdiebellimited.com

Issue Date: 10.4.10

Manual P/N *0512240 rev. I*

For machines beginning with S/N W11948 and above

3765 Champion Boulevard
Winston-Salem, NC 27105
336/661-1992 Fax: 336/661-1660
Toll-free: 800.858.4477

2674 N. Service Road, Jordan Station
Ontario, Canada L0R 1S0
905/562-4195 Fax: 905/562-4618
Toll-free: 800.263.5798

Printed in USA

For future reference, record your dishwasher information in the box below.

Model Number_____ Serial Number_____

Voltage_____Hertz_____ Phase_____

Service Service Agent _____ Tel:_____

Moyer Diebel Parts Distributor _____ Tel:_____

National Service Department - Canada

Toll-free: 800/ 263-5798
Tel: 905/ 562-4195
Fax: 905/ 562-4618
email: service@moyerdiebellimited.com

National Service Department -USA

Toll-free: 800/ 858-4477
Tel: 336/661-1992
Fax: 336/ 661-1660
email: service@moyerdiebel.com

ATTENTION:

The dishwasher model no., serial no., voltage, Hz and phase are needed to identify your machine. Please have this information on-hand if you call for service assistance.

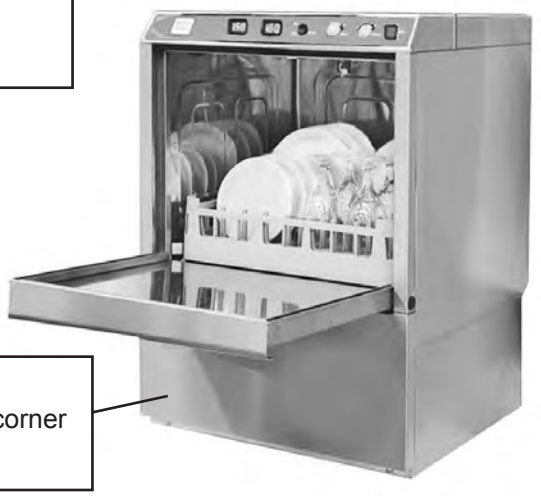

The dishwasher data plate is located on the left front corner of the front access panel.

The USGBC and the CaGBC Member Logos are trademarks owned by the U.S. Green Building Council and The Canadian Green Building Council, respectively, and are used by permission. The logos signify only that Moyer Diebel is a USGBC member and a CaGBC member; USGBC and CaGBC do not review, certify nor endorse the products or services offered by its members.

COPYRIGHT © 2010 All rights reserved Printed in the USA

CANADA POSTES
POST CANADA

Postage paid
if mailed in Canada

Port payé si posté
au Canada

Business Reply Mail

Correspondance-réponse d'affaires

3026604 **01**

1000004691-L0R1S0-BR01

MOYER DIEBEL LIMITED
PO BOX 301
JORDAN STATION ON L0R 1S0

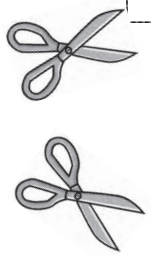

ATTENTION:

Complete the back of the POSTAGE PAID WARRANTY CARD below, then cut along the dashed lines and mail immediately to make sure that your machine warranty is validated.

USE CANADIAN WARRANTY CARD IN CANADA AND USA WARRANTY CARD IN THE UNITED STATES.

NO POSTAGE
NECESSARY
IF MAILED
IN THE
UNITED STATES

BUSINESS REPLY MAIL
FIRST-CLASS MAIL PERMIT NO. 2101 WINSTON-SALEM, NC

POSTAGE WILL BE PAID BY ADDRESSEE

MOYER DIEBEL
PO BOX 4183
WINSTON-SALEM, NC 27119-0981

WARRANTY REGISTRATION CARD

Model	Serial #

Date of Installation: ___/___ /____

Company Name: _____

Address: _____ _____ _____
(Street) State or Province Zip Code

Telephone #: ( ) _____ --- _____

Contact: _____

Installation Company: _____

Address: _____

Telephone #: _____

Contact: _____

This Card Must Be Returned to Validate Machine Warranty:

IMPORTANT IMPORTANT

WARRANTY REGISTRATION CARD

Model	Serial #

Date of Installation: ___/___ /____

Company Name: _____

Address: _____ _____ _____
(Street) State or Province Zip Code

Telephone #: ( ) _____ --- _____

Contact: _____

Installation Company: _____

Address: _____

Telephone #: _____

Contact: _____

This Card Must Be Returned to Validate Machine Warranty:

IMPORTANT IMPORTANT

Revision History

- The Revision History can contain part number changes, new instructions, or information that was not available at print time.
- We reserve the right to make changes to these instructions without notice and without incurring any liability by making the changes..
- Equipment owners may request a revised manual, at no charge, by calling 1 (800) 858-4477 in the USA or by calling 1 (800) 263-5798 in Canada.

Revision Date	Revised Pages	Serial Number Effectivity	Revision Description
9.15.06	All	W11948	Released first edition
3.22.07	59	W11948	Revised Schematic Solid State Timer Service
11.26.07	iii, 3-6, 28-29, 30-31, 32-33, 61-66	W14326	Installation, schematics MTB, Booster interlock 2KW wash tank Heater
12.1.07	32-33	W14478	Booster control thermostat P/N changed from 109069 to 0512108
6.10.09	All	W14236	Released rev. D of manual
6.10.09	42-43	W081217467	Added P/N 0712105 Timer Bd. to Parts List
6.10.09	70	W081217467	Added Timer Bd. Diagnostic Instructions
6.10.09	28-29	W081217467	Added Thermostat Adapter to booster
10.5.09	30-31	W14236	Changed Contactor P/N from 107369 to 112518
2.25.10	15	W100120006	Revised 401HT Operation
2.25.10	28-29	W100120006	Revised 401HT Booster adding Rinse Thermometer Tee
2.25.10	46-47	W100120006	Revised Thermometer P/N's
2.25.10	52-53	W100120006	Revised Front Panel P/N's
10.4.10	49	W100120006	Changed Item 13 P/N from 0312183 to P/N 0312181

LIMITED WARRANTY

Moyer Diebel, P.O. Box 4149, Winston-Salem, North Carolina 27115, and P.O. Box 301, 2674 N. Service Road, Jordan Station, Canada, L0R 1S0, warrants machines, and parts, as set out below.

Warranty of Machines: Moyer Diebel warrants all new machines of its manufacture bearing the name "Moyer Diebel" and installed within the United States and Canada to be free from defects in material and workman ship for a period of one (1) year after the date of installation or fifteen (15) months after the date of shipment by Moyer Diebel, whichever occurs first. [See below for special provisions relating to glasswashers.] The warranty registration card must be returned to Moyer Diebel within ten (10) days after installation. If warranty card is not returned to Moyer Diebel within such period, the warranty will expire after one year from the date of shipment.

Moyer Diebel will not assume any responsibility for extra costs for installation in any area where there are jurisdictional problems with local trades or unions.

If a defect in workmanship or material is found to exist within the warranty period, Moyer Diebel, at its election, will either repair or replace the defective machine or accept return of the machine for full credit; provided; however, as to glasswashers, Moyer Diebel's obligation with respect to labor associated with any repairs shall end (a) 120 days after shipment, or (b) 90 days after installation, whichever occurs first. In the event that Moyer Diebel elects to repair, the labor and work to be performed in connection with the warranty shall be done during regular working hours by a Moyer Diebel authorized service technician. Defective parts become the property of Moyer Diebel. Use of replacement parts not authorized by Moyer Diebel will relieve Moyer Diebel of all further liability in connection with its warranty. In no event will Moyer Diebel's warranty obligation exceed Moyer Diebel's charge for the machine. The following are not covered by Moyer Diebel's warranty:

a. Lighting of gas pilots or burners.
b. Cleaning of gas lines.
c. Replacement of fuses or resetting of overload breakers.
d. Adjustment of thermostats.
e. Adjustment of clutches.
f. Opening or closing of utility supply valves or switching of electrical supply current.
g. Cleaning of valves, strainers, screens, nozzles, or spray pipes.
h. Performance of regular maintenance and cleaning as outlined in operator’s guide.
i. Damages resulting from water conditions, accidents, alterations, improper use, abuse, tampering, improper installation, or failure to follow maintenance and operation procedures.
j. Wear on Pulper cutter blocks, pulse vanes, and auger brush.

Examples of the defects not covered by warranty include, but are not limited to: (1) Damage to the exterior or interior finish as a result of the above, (2) Use with utility service other than that designated on the rating plate, (3) Improper connection to utility service, (4) Inadequate or excessive water pressure, (5) Corrosion from chemicals dispensed in excess of recommended concentrations, (6) Failure of electrical components due to connection of chemical dispensing equipment installed by others, (7) Leaks or damage resulting from such leaks caused by the installer, including those at machine table connections or by connection of chemical dispensing equipment installed by others, (8) Failure to comply with local building codes, (9) Damage caused by labor dispute.

Warranty of Parts: Moyer Diebel warrants all new machine parts produced or authorized by Moyer Diebel to be free from defects in material and workmanship for a period of 90 days from date of invoice. If any defect in material and workmanship is found to exist within the warranty period Moyer Diebel will replace the defective part without charge.

<u>DISCLAIMER OF WARRANTIES AND LIMITATIONS OF LIABILITY.</u> MOYER DIEBEL'S WARRANTY IS ONLY TO THE EXTENT REFLECTED ABOVE. MOYER DIEBEL MAKES NO OTHER WARRANTIES, EXPRESS OR IMPLIED, INCLUDING, BUT NOT LIMITED, TO ANY WARRANTY OF MERCHANTABILITY, OR FITNESS OF PURPOSE. MOYER DIEBEL SHALL NOT BE LIABLE FOR INCIDENTAL OR CONSEQUENTIAL DAMAGES. THE REMEDIES SET OUT ABOVE ARE THE EXCLUSIVE REMEDIES FOR ANY DEFECTS FOUND TO EXIST IN MOYER DIEBEL DISHWASHING MACHINES AND MOYER DIEBEL PARTS, AND ALL OTHER REMEDIES ARE EXCLUDED, INCLUDING ANY LIABILITY FOR INCIDENTALS OR CONSEQUENTIAL DAMAGES.

Moyer Diebel does not authorize any other person, including persons who deal in Moyer Diebel dishwashing machines to change this warranty or create any other obligation in connection with Moyer Diebel Dishwashing Machines.

Table of Contents

Model 201, 401, 501 Undercounter Dishwashers

Revision History ..... *i*
Limited Warranty ..... *ii*
Model Descriptions ..... *iv*

Installation *1*

Receiving *1*
Electrical Connections *2*
Water Connections *6*
Drain Connections *7*

Initial Start-up *8*

Booster Fill Switch *8*
Check List *9*
Chemical Dispensing Pumps *10*
Priming *12*
Adjustments *13*

Operation *14*

Normal Wash Mode *14*
Scrub Mode (extended wash) *15*
Rinse Sentry Mode *15*
Drain Operation *16*

Cleaning and Maintenance *17*

Cleaning *17*
De-liming *19*
Maintenance *20*
Troubleshooting *21*

Service Replacement Parts *23*

Electrical Schematics *55*

Timer Chart *62*

Basic Service *63*

Model Description

201-HT, 401-HT, and 501-HT Models
Pumped final rinse high temperature sanitizing dishwasher
with built-in 40°F rise stainless steel electric booster.
Single Phase to Three Phase Field Conversion.

201-HTN, 401-HTN, and 501-HTN Models
Pumped final rinse high temperature sanitizing dishwasher
without built-in 40°F rise stainless steel electric booster.

201-LT, 501-LT Model
Pumped final rinse low temperature chemical sanitizing dishwasher
with 3 built-in chemical dispensing pumps.

Optional Equipment *(consult factory)*

70°F/39°C rise built-in booster heater

70°F/39°C rise booster heater element-P/N 111233, Gasket- P/N 109985

1-RDT Right-hand sink - P/N 403562

1-RDT Left-hand sink - P/N 403561

17" Stand - P/N 0708757

17" Storage cabinet - P/N 0703593

6" Stand - P/N 0712393

Peg dish rack - P/N 101285

Flat-bottom dish rack - P/N 101273

Drain water tempering kit - 0712382-1

Receiving

NOTE:
The installation of your dishwasher must be performed by qualified service personnel.
Problems due to improper installation are not covered by the Warranty.

1. Inspect the outside of the dishwasher carton for signs of damage.
2. Remove the carton and inspect the dishwasher for damage.
3. Check for any accessories that may have shipped with your dishwasher.
4. Turn to the front of this manual and complete the warranty card.
   Immediately mail the warranty card to validate your warranty.
5. Move the dishwasher near its permanent location.

CAUTION:
Be careful when lifting and moving the dishwasher to prevent damage to the machine.

NOTE:
The installation of the dishwasher must comply with local health codes.

6. Compare the installation site utility connections with the dishwasher utility connections and make sure that they are the same.
7. The dishwasher can be installed as a free-standing unit or under a built-in counter-top.
   The typical counter-top height in most locations is 34" [86cm].
8. Under counter installations should provide storage space for the dishwasher chemical supply containers. Containers must not be
   placed higher than 10" [25cm] above the floor.
9. Chemical supply containers should be placed as close to the machine as possible.
10. Place the dishwasher in its permanent location.
11. The dishwasher has 4 adjustable feet for leveling.
12. Level the dishwasher front-to-back and side-to-side.

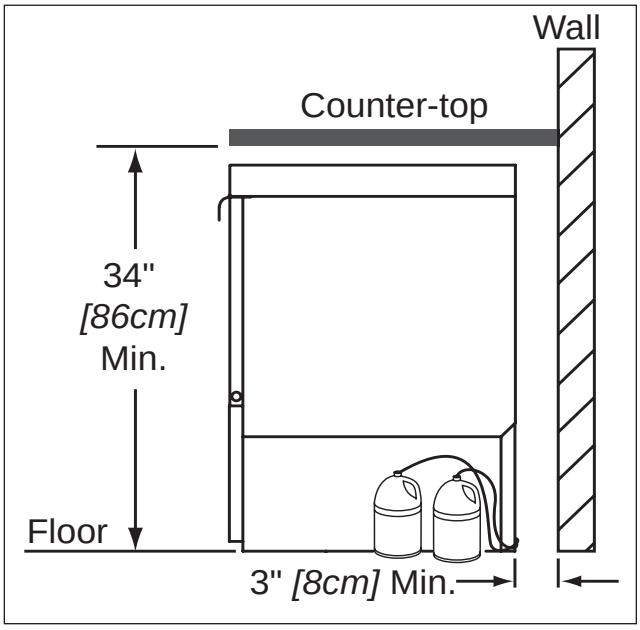

Electrical Connections

For Model 201HT, 401HT, and 501HT machines beginning with S/N 14236 and above

1. Refer to the connection diagrams below.
2. Models 201HTN /LT, 401HTN, 501HTN /LT are equipped with a 4 ft. power cord/plug and only require a 115VAC,15A receptacle.
3. Models 201 HT, 401HT, and 501HT 1 PH machines require a 3-wire plus ground supply which includes a current carrying neutral.
4. Models 201 HT, 401HT, and 501HT 3 PH machines require a 4-wire plus ground supply which includes a current carrying neutral.
5. Power connections are made at the Main Terminal Block (MTB) which is located at the lower right-hand side of the dishwasher directly behind the lower front access panel.
6. Remove the MTB cover and 2 screws holding the MTB to the machine base. Then, pull the MTB up and forward to make the electrical connections.
7. Provide a 3 ft. service loop in the supply cable for servicing.
8. Re-install the MTB and the lower front access panel to complete the installation.

Pull the MTB out to wire main incoming power.

THREE PHASE POWER CONNECTION
Model 201HT, 401HT, 501HT

(For machines beginning with S/N 14236 and above)

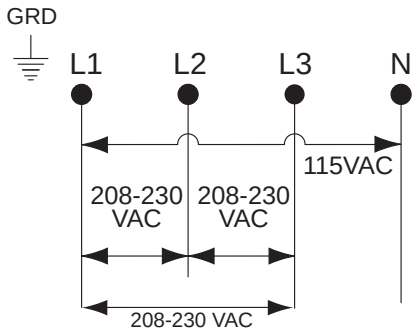

HOW TO CONNECT 3 PHASE POWER

1. Check the data plate on the front of the dishwasher for the phase of the machine.

If the data plate says the machine is 3 Phase, then connect a 3 PH power supply.

2. Remove the lower access panel.
3. Pull power connection box forward and out.
4. The Main Terminal Block has terminals for L1, L2, L3, Neutral and Ground.
5. Connect ground, then connect L1, L2, L3 to 208-230VAC.
6. Connect a current carrying neutral to N.
7. Main power connections are complete.

SINGLE PHASE POWER CONNECTION
Model 201HT, 401HT, 501HT

(For machines beginning with S/N 14236 and above)

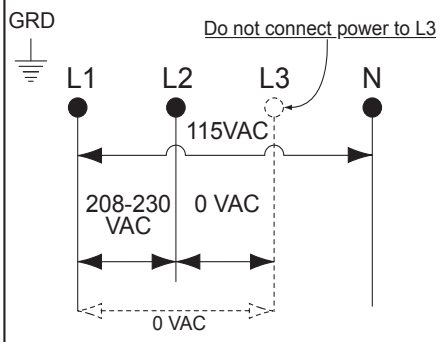

HOW TO CONNECT 1 PHASE POWER

1. Check the data plate on the front of the dishwasher for the phase of the machine.

If the data plate says the machine is 1 Phase, then connect a 1 PH power supply.

2. Remove the lower access panel.
3. Pull power connection box forward and out.
4. The Main Terminal Block has connections for L1, L2, L3, Neutral and Ground.
5. Connect ground, then connect L1, L2 to 208-230VAC.
6. Connect a current carrying neutral to N.

DO NOT CONNECT POWER TO L3.

7. Main Power connections are complete.

ATTENTION
Models 201 HTN, 201LT, 401HTN, 501HTN, 501LT are equipped with a 4 ft. power cord and plug. These models only require a 115VAC,15A receptacle.

Electrical Connections

For machines built prior to S/N 14236

WARNING:

Electrocution or serious injury may result when working on an energized circuit.

Disconnect power at the main breaker or service disconnect switch before working on the circuit.

Lock-out and tag the breaker to indicate that work is being performed on the circuit.

ATTENTION

A qualified electrician must connect the main incoming power to the dishwasher in accordance with all local codes and regulations or in the absence of local codes in accordance with the National Electrical Code.

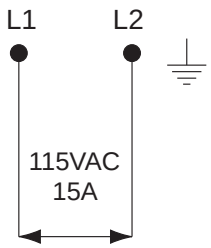

4 ft. power cord w/plug supplied

Model 201HTN / LT, 401HTN, 501HTN /LT
All S/N's

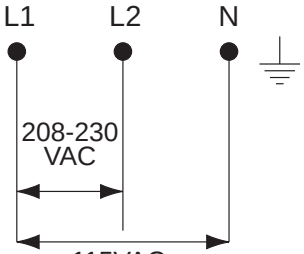

Model 201HT, 401HT, 501HT
Prior to S/N 14236

Note:
Models 201 HTN, 201LT, 401HTN, 501HTN, 501LT are equipped with a 4 ft. power cord and plug. These models only require a 115VAC,15A receptacle.

1. Refer to the connection diagrams above.
2. Models 201HTN /LT, 401HTN, 501HTN /LT are equipped with a 4 ft. power cord/plug and only require a 115VAC,15A receptacle.
3. Models 201 HT, 401HT, and 501HT 1 PH machines require a 3-wire plus ground supply which includes a current carrying neutral.
4. Models 201 HT, 401HT, and 501HT 3 PH machines require a 4-wire plus ground supply which includes a current carrying neutral.
5. Power connections are made at the Main Terminal Block (MTB) which is located at the lower right-hand side of the dishwasher directly behind the lower front access panel.
6. Remove the MTB cover and 2 screws holding the MTB to the machine base. Then, pull the MTB up and forward to make the electrical connections.
7. Provide a 3 ft. service loop in the supply cable for servicing.
8. Re-install the MTB and the lower front access panel to complete the installation.

Main Terminal Block (MTB) shown pulled out of dishwasher front to wire main incoming power

Electrical Connections (continued)

For Models 201HT, 401HT, and 501HT beginning with S/N 14236 and above

WARNING:

Electrocution or serious injury may result when working on an energized circuit.

Disconnect power at the main breaker or service disconnect switch before working on the circuit.

Lock-out and tag the breaker to indicate that work is being performed on the circuit.

Booster Heater Element
Field Conversion from Single to Three Phase Operation

Dishwashers shipped from the factory wired for 1 phase operation can be changed to 3 phase operation by following the procedure below.

1. Disconnect the main incoming power at the main service disconnect breaker or switch.
2. Remove the lower front access panel,
3. Remove the booster heater element cover.
4. Locate the 1H3 booster heater wire stored on the right-side of the booster tank.
5. Disconnect the existing booster heater wires and change the booster heater element jumpers as shown in the illustration below
6. Connect wires 1H1, 1H2, and 1H3 as shown.
7. Re-install the booster heater cover.
8. A replacement 3PH data plate is stowed on the back of the lower front access panel. Remove the existing 1PH data plate on the front of the panel with the new 3PH data plate. Discard the 1PH data plate.
9. Contact a qualified electrician to change the incoming service power to 3PH. An illustration of the power connections on the Main Terminal Block is on the next page.

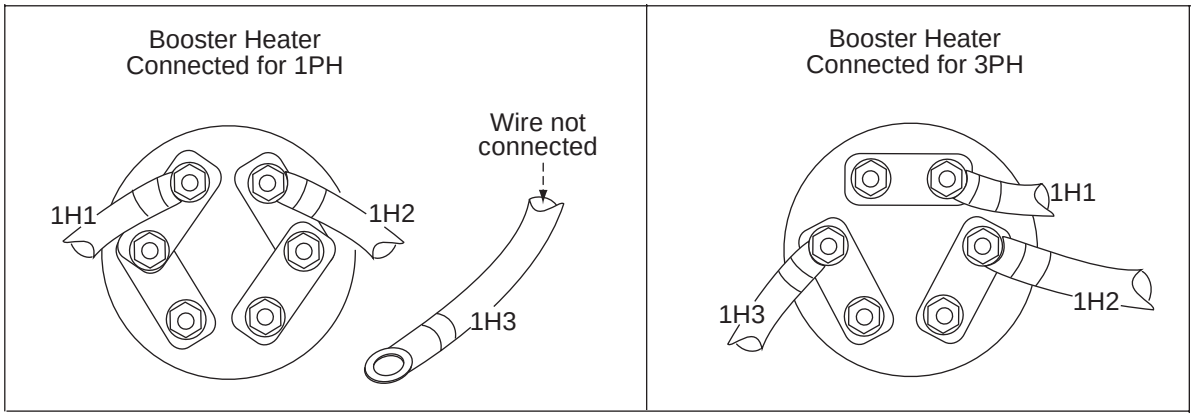

Booster heater element connections shown for 1 phase and 3 phase operation.

Booster Heater Element
Field Conversion from Single to Three Phase Operation (continued)

ATTENTION ELECTRICIAN:

The Main Terminal Block (MTB) is a 4-wire connection block which includes a current-carrying neutral. The block can be connected for 3PH or 1PH depending on how the booster heater heater is wired (see the previous page). Refer to the diagram to the right and connect the main incoming electric service accordingly. The data plate on the lower front cover of the dishwasher provides the correct power requirements.

Contact the local authorized service agent if there are any questions concerning the proper power connections.

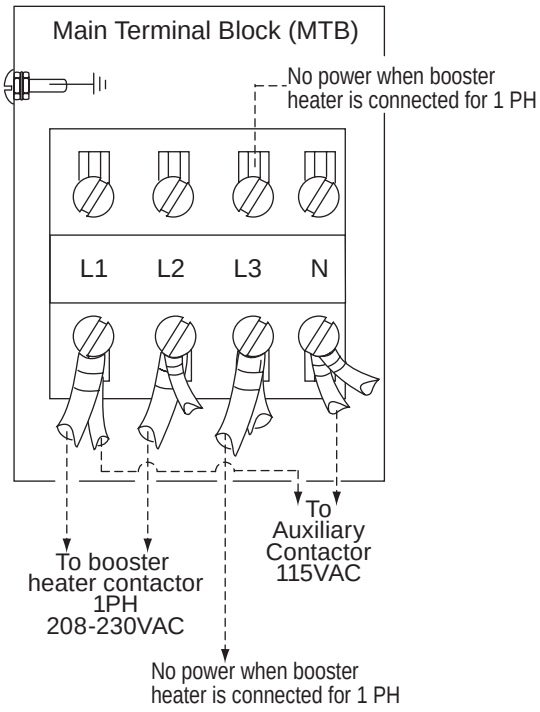

Booter Heater/Wash Tank Heater Interlock Circuit

For Model 201HT, 401HT, 501HT dishwashers beginning with S/N 14236 and above.

The booster heater/wash tank heater interlock circuit removes power from the wash tank heater whenever the booster heater contactor energizes. The illustration below shows how the booster heater contactor is wired. The booster heater contactor is located behind the lower front access panel.

Interlock Circuit Operation

1. The dishwasher fills with water when the main power switch on the dishwasher is turned on. The booster heater thermostat calls for heat which energizes the booster heater contactor.
2. The auxiliary contact on the top of the contactor opens and removes power from the wash tank heater.
3. When the booster heater thermostat is satisfied, the booster heater contactor de-energizes and the auxiliary contacts close applying power to the wash tank heater.
4. This operation is repeated whenever the booster heater calls for heat.

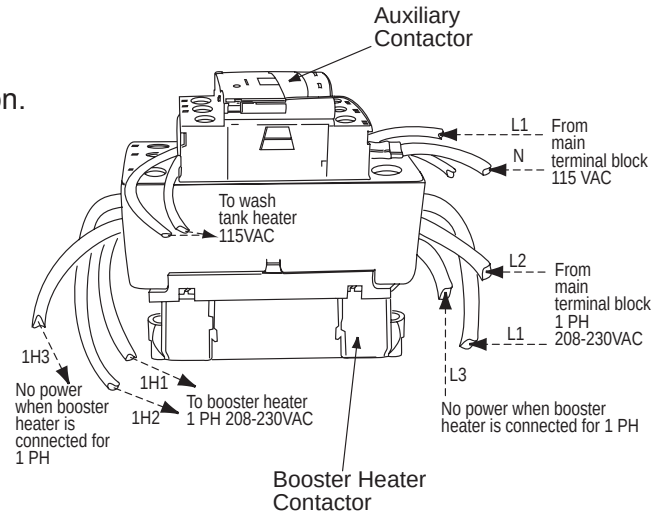

Water Connections

NOTE
Plumbing connections must comply with national, local plumbing and sanitary codes.

IMPORTANT
Make sure that the flexible water supply and drain hoses are not kinked.

1. All models have a 6 ft./1.8 m flexible hot water fill hose with a 3/4" female garden hose connector.

2. A 1/2" or larger main incoming supply line should be installed to the dishwasher.

3. A 1/2" or larger shut-off valve should be installed in the main water supply as close to the dishwasher as possible for service.

4. All models have a built-in flow control. The incoming hot water supply pressure must be between 25-95 psi/173-655 kPa.

5. <u>For Models 201HT, 401HT, and 501HT:</u>
   For the 40°F/ 22°C rise booster, the hot water supply must provide a minimum of 140°F/60°C, measured at the dishwasher.

   For the 70°F/39°C rise booster the hot water supply must provide a minimum of 110°F/43°C measured at the dishwasher.

6. <u>For Models 201HTN, 401HTN, 501HTN:</u>
   The hot water supply must provide a minimum of 180°F/82°C, measured at the dishwasher for The incoming hot water supply line must be a 1/2" or larger.

7. <u>Models 201LT, 501LT:</u>
   The hot water supply must provide a minimum of 140°F/60°C, measured at the dishwasher.

Drain Connections

ATTENTION
Do not connect the drain hose to a disposer. The dishwasher will not drain correctly.

NOTE
The dishwasher drains in 8 seconds and drain water exits the hose with considerable force.

1. All models have a 6ft. 5/8" I.D. drain hose. The maximum drain height connection must not exceed 3 ft.[9 m]. The recommended drain height is 17" [.4 m] or less above the finished floor.
2. The drain hose is located at the rear of the dishwasher. A 5/8" hose-barb fitting is strapped to the drain hose to connect the drain hose.
3. The drain hose is secured to the rear of the machine by a clamp to maintain a goose-neck bend in the drain hose.

   DO NOT REMOVE THE DRAIN HOSE RETAINING CLAMP.
   DO NOT STRETCH THE DRAIN HOSE.

4. Install the drain hose to a "WYE" drain fitting. Connection to a "TEE" fitting will prevent the dishwasher from draining completely.
5. The maximum drain flow is 15 US gpm/12.5 Imp gpm/57 Lpm
6. Make sure the drain hose does not kink. Kinks will prevent the dishwasher from draining completely, and the dishwasher will overflow out the front door.

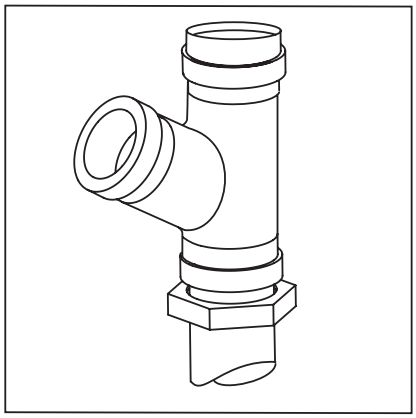

The dishwasher flexible drain hose must be connected to a WYE fitting.

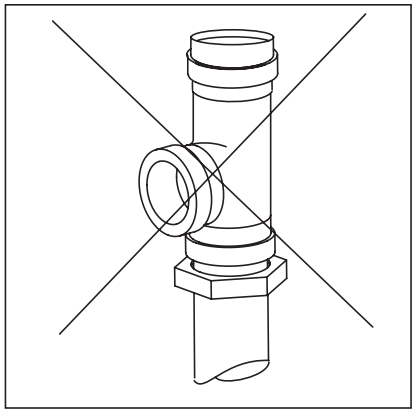

Do not connect the dishwasher flexible drain hose to a TEE fitting.

Filling the Booster

For Models 501HT, 401HT, and 201HT

Note:
The dishwasher contains a built-in booster heater that was drained prior to shipment and must be filled with water before operating the dishwasher.

Booster Fill Switch

The booster heater is filled using the Booster Fill Switch. It is located behind the lower front access panel in the center of the bracket that holds the chemical dispensing pumps (see the photos to the right).

Fill the booster heater:

1. Make sure that the dishwasher power switch is OFF.
2. Remove the lower front access panel.
3. Locate the booster fill switch. It is in the left-center of the electrical component panel.
4. Make sure the Booster Fill Switch is in the middle position, (see A).
5. Turn the water supply and the main power supply on.

   DO NOT TURN THE DISHWASHER POWER SWITCH ON.

6. Push and hold the switch to the FILL position (see B) until you hear water entering the wash compartment, then release the switch.

7. Push the Booster Fill Switch to the ON position and release (see C).

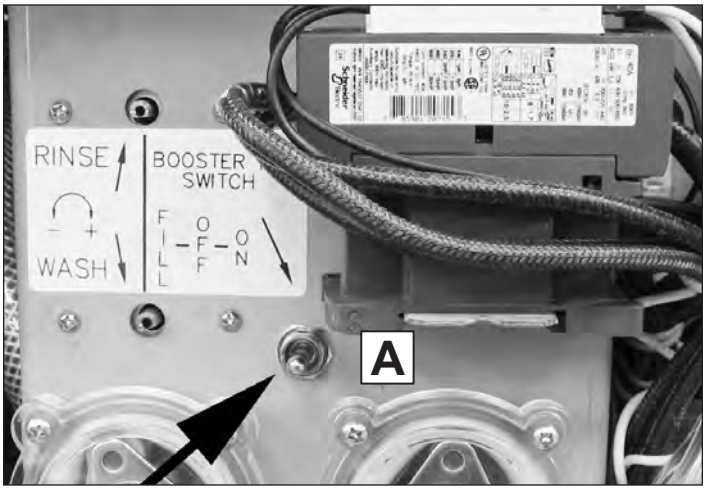

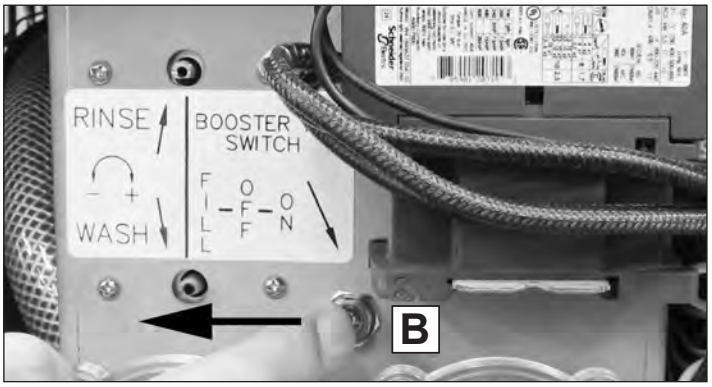

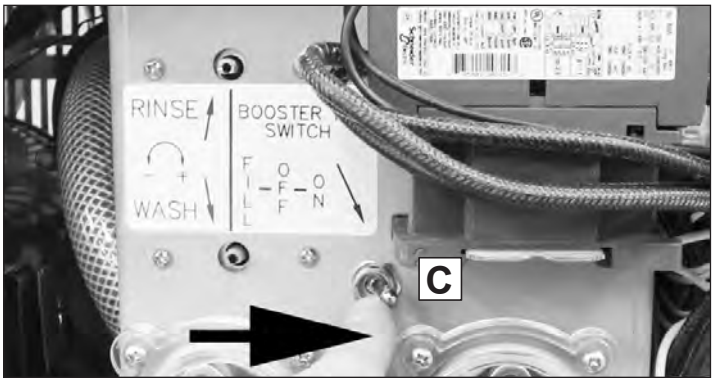

Check List

All Models

1. Remove any protective film from dishwasher.
2. Check the interior for foreign material.
3. Make sure that the dishwasher is permanently located.
4. Make sure that all utility connections are complete.
5. Make sure that the flexible drain hose and the hot water fill hose are not kinked.
6. Make sure that the chemical supply containers are full and that the chemical pick-up tubes are installed in the proper containers.
7. Make sure that the scrap screen is in place.
8. Make sure that the spray arms are in place and that they spin freely.
9. Close the dishwasher door.
10. Turn hot water supply on and check for leaks in the main water supply piping connected to the dishwasher.

Install Scrap Screen

Chemical Dispensing Pumps

Models 501HT, 501HTN, 401HT, 401HTN, 201HT, 201HTN

1. Models 201HT, 201HTN, 401HT, 401HTN, 501HT, and 501HTN:
   are equipped with a built-in detergent dispensing pump and a rinse-aid dispensing pump. The pumps are located behind the lower front access panel.

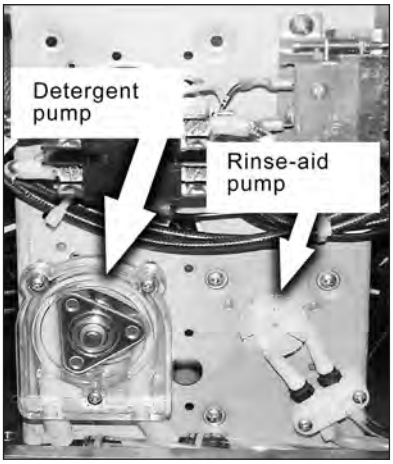

Chemical Dispensing Pumps for High Temperature HT and HTN Models.

Chemical Pick-up Tubes, stiffener tubes & line strainers.

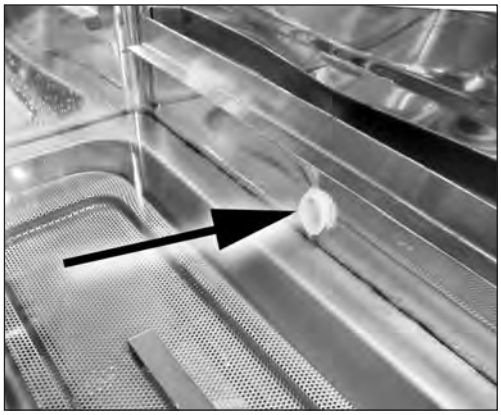

Chemical Injection Point

2. Each pump is equipped with a line-strainer, stiffener tube and 6 ft. of pick-up tubing.

   The pick-up tubes are marked with colored labels that identify the type of chemical used.
   RED = Detergent (Non-chlorinated)
   BLUE = Rinse-Aid (Consult chemical supplier)

   WHITE = Sanitizer (5.25% Sodium hypochlorite *(chlorine bleach)* solution. (LT ONLY)

3. Make sure the stiffener tubes are placed in the correct chemical supply container (chemicals supplied by others).
4. The chemical supplier must adjust the dispensers to deliver the correct amount of chemicals to the dishwasher.
5. Chemical containers must be placed as close to the dishwasher as possible. Do not elevate the containers above the finished floor.

Chemical Dispensing Pumps
Models 501LT and 201LT

ATTENTION
(For LT Models Only), 5.25% sodium hypochlorite (chlorine bleach) must be used as a sanitizing agent to provide a minimum concentration of 50 ppm in the final rinse.
The 50 ppm concentration must be checked using chlorine test strips to make sure that the proper concentration is maintained

1. Models 501LT and 201LT are equipped with a built-in detergent, rinse-aid, and sanitizer dispensing pumps *(See the photograph at right).*
2. The pumps are located on a center bracket behind the lower-front access panel.
3. The pick-up tubes are marked with colored labels that identify the type of chemical used:

RED	= Detergent	(Non-chlorinated)
BLUE	= Rinse-Aid	(Consult chemical supplier)
WHITE	= Sanitizer	(5.25% Sodium hypochlorite *(chlorine bleach)* solution.

   The chemicals enter the wash tank compartment through a fitting on the right-side of the wash compartment.
4. The detergent supply should be a non-chlorinated liquid detergent, the chemical supplier will determine an appropriate rinse agent. Your chemical supplier should adjust the dispensers for the supplied product.
5. Place the chemical supply containers as close to the dishwasher as possible.
6. Do not elevate the chemical containers above the finished floor.

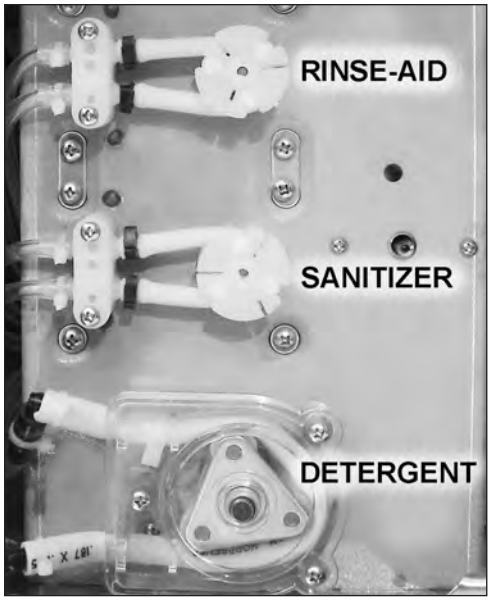

501LT and 201LT Chemical Dispensers

Chemical Pick-up Tubes, stiffener tubes & line strainers.

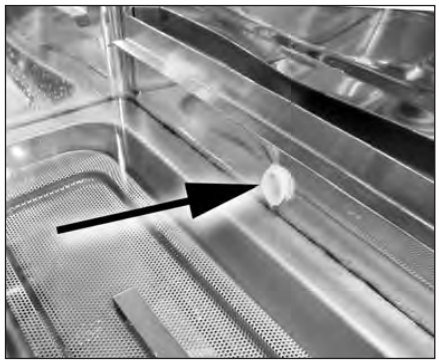
Chemical Injection Point

Chemical Dispensers

Priming the Chemical Dispensing Pumps

Models 501HT, 501HTN, 401HT, 401HTN, 201HT, 201HTN

1. Make sure the chemical containers are full and the correct pick-up tubes are in the containers.
2. Turn the dishwasher power switch ON. The switch will illuminate and the dishwasher will fill with water.
3. Open the dishwasher door, then push and hold the prime push button UP to the DET position until detergent is observed entering the wash tank compartment.
4. Push and hold the prime push button DOWN to the RINSE position until rinse-aid enters the wash tank compartment. Release the push button.
5. Priming is complete.

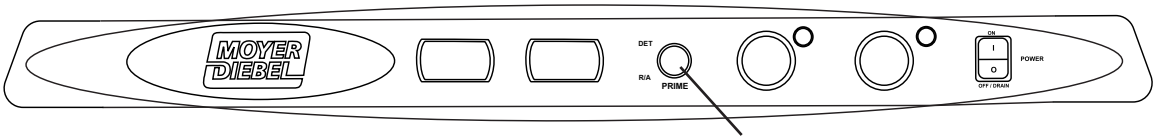

Prime Switch
Model Series 501

Models 501LT, and 201LT

1. Make sure the chemical containers are full and the correct pick-up tubes are in the containers.
2. Turn the dishwasher power switch ON. The switch will illuminate and the dishwasher will fill with water.
3. The Prime push button primes the Sanitizer pump and the Rinse-aid pump. The Detergent pump does not have a prime push button. During normal operation, observe the detergent pick-up tubing to make sure that air bubbles are moving through the tubing which indicates that the detergent is being dispensed.
4. Open the dishwasher door, then push and hold the prime push button UP to the SANI position until sanitizer enters the wash tank compartment. Release the PRIME push button.
5. Push and hold the Prime push button DOWN to the RINSE position until rinse-aid is observed entering the wash tank compartment. Release the Prime push button.
6. Priming is complete.

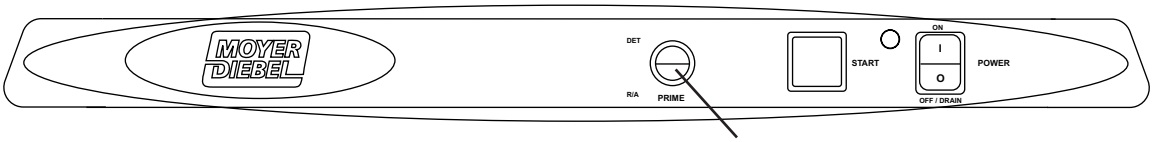

Prime Switch
Model Series 401, 201

Chemical Dispensers
All Models

Chemical Dispensing Pump Speed and Tank Fill Adjustments

Note:
The chemical dispensing pump speeds are not set at the factory and variations in the type of chemicals supplied by the chemical supplier usually require that the supplier make final adjustments for the products supplied.

1. Adjustment screws are provided for the dispensing pumps and for the wash tank fill. They are located on the right-side of the dishwasher behind the lower front access panel.
2. Make sure the chemical containers are full and the pick-up tubes are in the proper containers.
3. Turn the dishwasher power switch ON.
   The switch will illuminate and the dishwasher will fill with water.
4. The chemical supplier should run a normal dishwasher cycle and test detergent and rinse-aid concentrations according to the chemical supplier's instructions.

Turning the chemical dispenser adjusting Screws increase or decrease the chemical dispensed.

Caution:
Excessive pressure to the potentiometers when adjusting can result in bent or broken adjusting screws.

5. Each dispensing pump has a clearly marked adjustment screw. Turn the screw CW to increase the time of the dispensing pump and CCW to reduce the dispensing pump time.
6. The Fill adjustment screw will provide a small change in the tank water level. If a large adjustment is needed, then check the incoming water pressure making sure the fill hose is not kinked. If the above items are okay then the size of the incoming water supply should be evaluated.
7. <u>NOTE:</u>
   For Models 501HT, 501HTN, use detergent and rinse-aid only, a sanitizer is not required.

Proper Water Level in the Wash Tank.

8. For Model 501LT and 201LT, detergent, rinse-aid and sanitizer are used.

   5.25% sodium hypochlorite *(chlorine beach) must be used as a sanitizing agent to provide a minimum concentration of 50 ppm in the final rinse. The 50 ppm concentration must be checked using chlorine test strips to make sure that the proper concentration is maintained.*

Normal Wash Cycle

501HT Control Panel

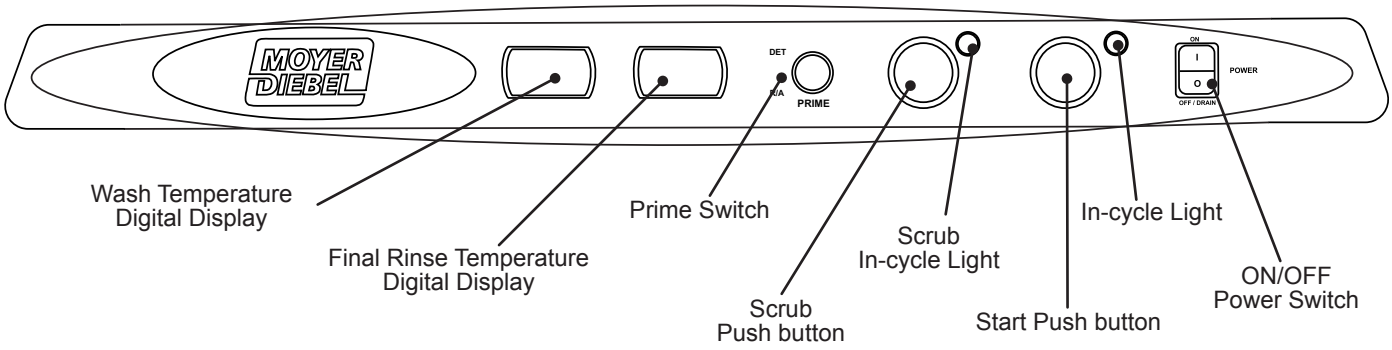

1. Push the POWER switch up to the ON position. The switch illuminates, water enters the wash compartment. The booster heater begins to heat the final rinse water then the wash tank heater heats the wash tank water.
2. Wait 10-minutes for the booster to reach temperature. Then, run 2-3 empty cycles before inserting your first rack of dishes.
3. Prescrap and load wares into the appropriate dishrack. Do not overload dishrack. Load wares in a peg rack; load silverware in a single layer in a flat-bottom dishrack. Overloading dishrack will result in poor washing results.
4. Open dishwasher door and slide dishrack into the machine. Load 1 dishrack per wash cycle.
5. Close the dishwasher door. Press and hold START button for 1-second.
   The cycle light illuminates and the wash cycle begins.

NOTE:
Make sure the wash temperature is a minimum of 150°F/60°C. for high temp models and a minimum of 140°F/60°C for low temp models before beginning the wash cycle.

NOTE:
Opening the door stops the cycle. When the dishwasher door is closed the cycle resumes automatically. The dishwasher cycle will reset to the beginning If the door is open for more than 5-second.

All 201, 401 Control Panels

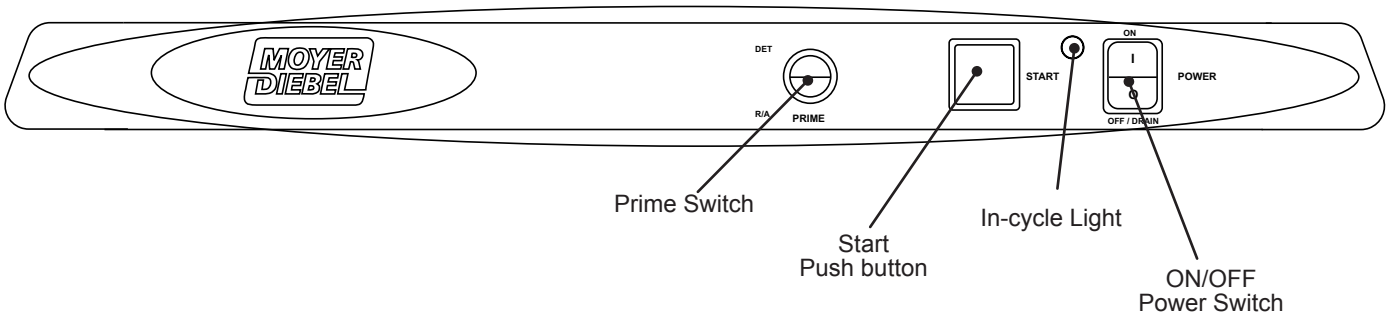

6. Check the rinse cycle temperature gauge during the final rinse cycle to ensure the final rinse temperature ranges between 180-195°F/82-91°C for high temperature models.

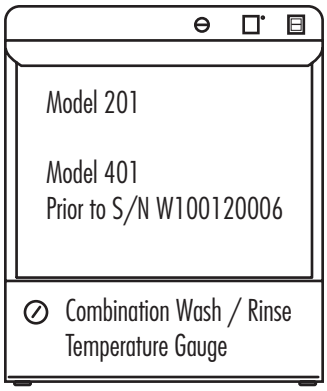

NOTE:
Models 201 and Models 401, (prior to S/N W10012006 for Model 401), have a single temperature gauge to indicate the wash and rinse water temperatures.

Model 401HT, beginning with S/N W100120006, has two temperature gauges. The right-hand gauge indicates the wash water temperature and the left-hand gauge indicates the final rinse water temperature during the final rinse cycle.

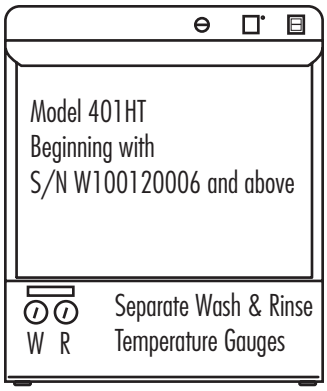

7. The green in-cycle light goes out completing the cycle. The final rinse water is held for the next wash cycle.
8. Open the dishwasher door and remove the dishrack of clean wares.
9. Repeat steps 2-8 for additional cycles.

Scrub Mode (extended wash) - Model 501HT Only

The SCRUB (extended wash) cycle is ideal for pots, pans, and heavily soiled items.

1. Follow STEPS 1-5 of the Normal Wash Cycle.
2. Wait 10 seconds to allow detergent to enter into the dishwasher before pressing the SCRUB push button.
3. Press the SCRUB push button. The light above the SCRUB button illuminates, indicating that the dishwasher is in a continuous SCRUB (extended wash) mode.
4. Press the SCRUB push button again to take the dishwasher out of the SCRUB (extended wash) mode. The light above the SCRUB button goes out; the green light above the START switch will stay illuminated, indicating the dishwasher has resumed the remainder of the wash cycle.

NOTE:
The dishwasher washes until the SCRUB push button is pressed a second time to stop the Scrub Mode (extended wash). If the SCRUB push button is not pressed a second time, then the Scrub Mode will operate for a maximum of 15 minutes and then resume the wash cycle.

Rinse Sentry Feature

High temperature dishwashers with built-in booster heaters are equipped with the Rinse Sentry feature. This feature extends the wash cycle for a maximimun of 5-minutes to ensure that the final rinse water temperature is a minimum of 180°F/82°C.

Dishwasher Drain Operation

1. Push the dishwasher POWER switch up to the ON position.
2. The POWER switch illuminates and the machine fills with water.
3. Press and hold the green START button for 1-second. (Silver button for Model 501HT).
4. Release the START switch.
5. The dishwasher starts and the green cycle light illuminates.
6. Check the temperature gauge to confirm that it displays the correct incoming hot water temperature. This may take several minutes for the wash tank to reach temperature.
7. When the dishwasher stops, push the POWER switch down to the OFF/DRAIN position.
8. The green cycle light illuminates as the dishwasher begins the drain cycle.
9. The green cycle light goes out when the machine has drained completely.

Note:
There is a 4-second delay after switching the machine off. The motor will start and stop 4 times before the drain cycle is complete.

Cleaning

The best preventative maintenance is keeping the dishwasher as clean as possible during regular use. A regular cleaning schedule will increase the life of the dishwasher and ensure the best results.

CAUTION:
Damage to the unit or improper operation may occur if components are not flushed and cleaned on a regularly scheduled basis.

Daily-End of the Day

1. Push the POWER switch to the OFF/DRAIN position and close the door to drain the tank. The green in-cycle light will illuminate indicating the machine is in the drain out cycle. This will last 90-seconds.

2. After the green in-cycle light goes out, open the door and remove both the upper and lower spray arms. Hold each spray arm, then remove the knurled retaining screw.

3. Remove and clean the scrap screen by rinsing with clean water. Do not strike the screen on hard surfaces.

4. Inspect the sump and clean the pump intake screen

5. Clean the spray arms to remove any debris from spray nozzles by back-flushing with water. Do not strike the spray arms against solid objects.

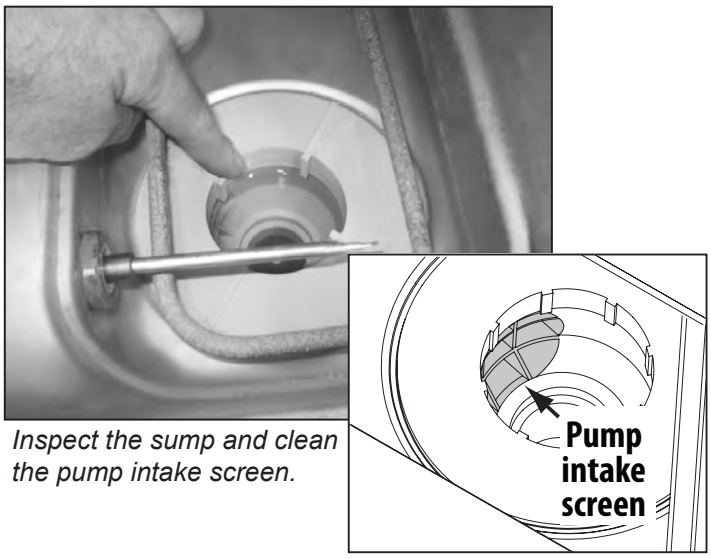

Inspect the sump and clean the pump intake screen.

Check spray arm bearings.

Cleaning

Daily-End of the Day *(continued)*

6. Reinstall the scrap screen.
7. Wipe the exterior of the dishwasher clean using a soft cloth and mild detergent.
8. Leave the dishwasher door open overnight to allow the inside to dry.

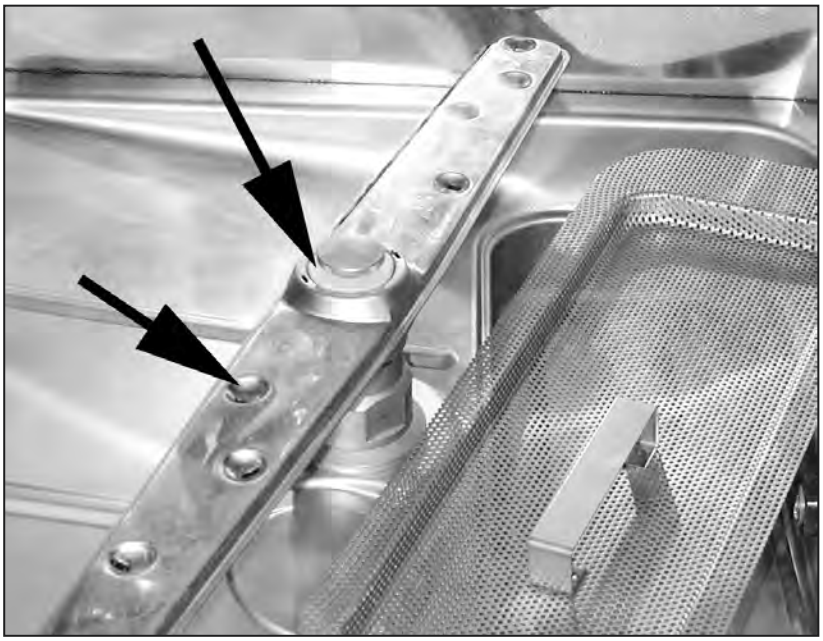

Clean Wash Nozzles and Bearings

Cleaning

After Meal Period or Every 8 Hours

Clean the scrap screen after each meal period and more frequently if necessary in order to keep the scrap screen from becoming clogged.

Deliming

Your dishwasher should be delimed regularly. The frequency will depend on the mineral content of your water.

Inspect your machine interior for lime deposits. If deliming is required, a deliming agent can be used to remove the deposits.

DANGER:
DEATH or serious injury may result if **Hazardous Gases** are created when deliming solution mixes with household bleach (sodium hypochlorite) or any products containing chlorine, iodine, bromine, or fluorine. Never mix deliming solution with other chemicals.
Consult your chemical supplier for specific safety precautions.

CAUTION:
Chemical burns or severe skin irritation may result when handling deliming solution.
Always wear protective clothing when handling deliming solution.
Consult your chemical supplier for specific safety precautions.

Note:
Consult your local chemical supplier for the proper chemicals.

Maintenance Schedule

The best maintenance you can perform is to keep your dishwasher clean.

Before and During Operation

- Check the temperature gauges during operation to ensure the proper temperatures are maintained.
- Check the chemical supply container level and replenish if necessary.

Weekly Maintenance

1. Inspect all water lines for leaks.
2. Check drain for leaks.
3. Clean accumulated lime deposits from the heating element.
4. Inspect each spray arm for clogged nozzles.
5. Check the scrap screen for damage and cleanliness.
6. Clean the chemical supply tubing.

To Clean the Chemical Supply Tubing:

1. Remove pick-up tubes from each container and place them in containers of hot water.
2. Press and hold the PRIME switch in the “UP” position to flush the detergent tubing and in the “DOWN” position to flush the rinse-aid tubing. (rinse-aid and sanitizer on LT Models).
3. Remove the pick-up tubes from the hot water and return them to their chemical containers.
4. Press and hold the PRIME switch in the “UP” position to fill the detergent tubing and in the “DOWN” position to fill the rinse-aid tubing (rinse-aid and sanitizer on LT Models).
5. Run a complete wash cycle to flush any chemicals out of the wash compartment.

Condition	Cause	Solution
Dishwasher will not run.	Door not closed. Main power OFF. Dishwasher OFF.	Close door completely. Check breaker on panel. Turn dishwasher ON.
Low or no water.	Main water supply off. Solenoid valve defective. Solenoid strainer clogged. Flow washer defective. Timer board defective.	Open supply valve. Install repair kit or replace. Clean strainer. Replace flow washer. Test/replace timer board.
Chemicals won't feed into dishwasher.	Chemical supply low. Supply tubing damaged. Supply tubing kinked. Pick-up tube clogged Timer board defective.	Refill chemical container. Replace tubing. Straighten tubing. Clean/replace tube. Test/replace timer board.
Low water pressure pumped from spray arms.	Clogged scrap screen. Clogged spray arms. Clogged pump intake screen.	Clean scrap screen. Clean spray arms. Clean sump and pump intake screen.
Poor wash results.	Water temperature low. Thermostat defective. (See chemicals won't feed above.) (See low or no water above.) Detergent injector defective. Wares incorrectly loaded. in dishrack.	Raise incoming water temperature. Adjust/replace thermostat. (See chemicals won't feed above.) (See low or no water above.) Replace squeeze tube. Replace injector motor. Clean tubing and pick-up. Reposition wares or reduce amount of wares.
(HT models only) dishwasher stays in wash cycle.	Rinse Sentry extends wash mode for a maximum time of 5-minutes to allow final rinse water booster temperature to reach 180˚F/82˚C. (501HT only) dishwasher is in Extended Wash Mode.	Raise incoming water temperature. Adjust/replace final rinse booster thermostat. Turn Extended Wash Mode off.

ATTENTION

HIGH TEMPERATURE MACHINES ARE EQUIPPED WITH THE RINSE SENTRY FEATURE. THE RINSE SENTRY WILL EXTEND THE WASH CYCLE IN THE EVENT THAT THE BOOSTER HEATER HAS NOT REACHED A MINIMUM TEMPERATURE OF 180°F/82°C.

This Page Intentionally Left Blank

Service Replacement Parts

Illustration	**Pg.**
Wash Pump/Motor Assy - All Models	24
Wash Tank, Drain, Scrap Screens - All Models	26
Built-in Electric Booster *(201HT, 401HT, 501HT)*	28
Base Electrical Components - All Models	30
Fill Piping - All Models	32
Fill Valve Assy - All Models	34
Fill Chute Assy - All Models	36
Sprayarm Assy - All Models	38
Main Terminal Block, Timer Board - All Models	40
Rinse-Aid/Sanitizer Chemical Dispensing Pump - All Models	42
Detergent Chemical Dispensing Pump - All Models	44
Control Panel *(201HT/HTN, 201LT, 401HT/HTN, 501HTN, 501LT)*	46
Control Panel with Digital Display *(501HT)*	48
Door Assy - All Models	50
Panel Assy - All Models	52

Wash Pump/Motor Assy - All Models

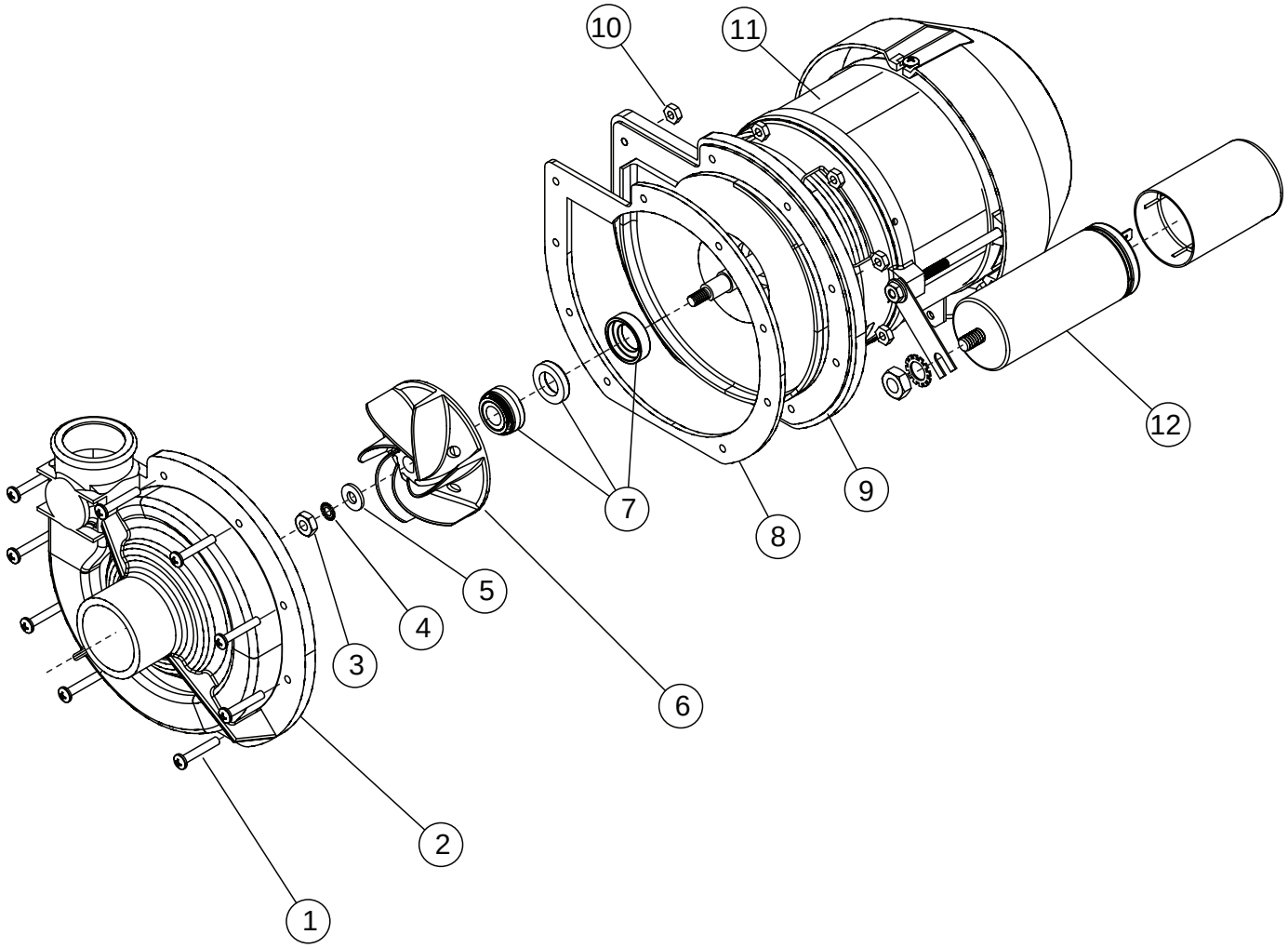

Item No.	Part No.	Description	Qty.
1	0512340	SCREW, M4.0x0.70 30mm PHILIPS PAN HEAD	9
2	0512341	IMPELLER HOUSING COVER	1
3	114144	NUT, M6 (left-hand threads)	1
4	0501501	WASHER, LOCK, M6	1
5	0501478	WASHER, PLAIN, M6	1
6	0512345	IMPELLER	1
7	114139	SEAL	1
8	110285	GASKET	1
9	114137	BACKPLATE, PUMP	1
10	107337	NUT, M4	9
11	0512101	PUMP ASSEMBLY COMPLETE, 115VAC/60/1	1
12	0512347	CAPACITOR	1

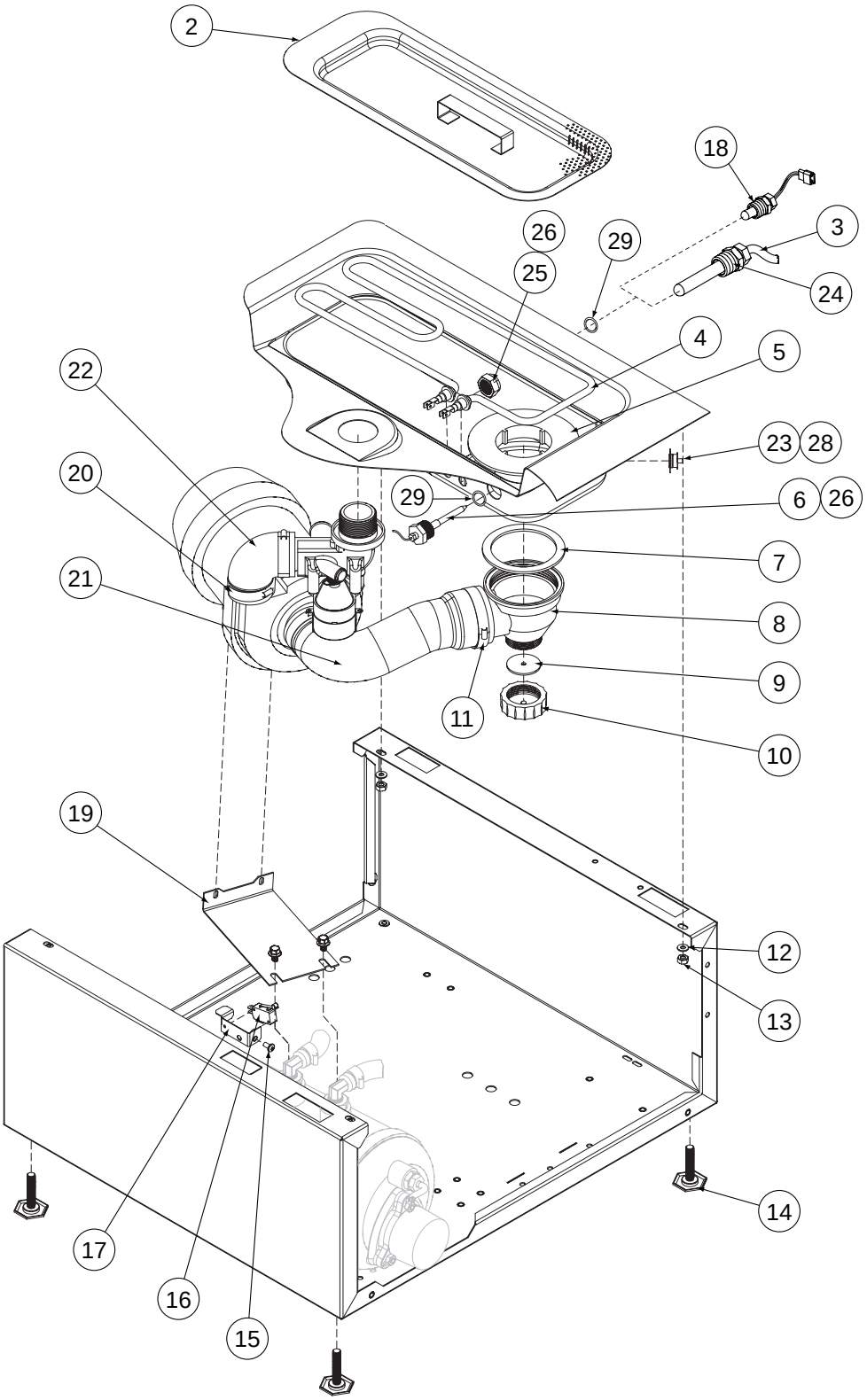
2
18
3
24
26
29
25
4
5
22
23
28
20
29
6
26
7
21
8
9
11
10
19
12
13
14
17
16
15

Item No.	Part No.	Description	Qty.
1	0509302	94” DRAIN HOSE - 5/8” ID X 1” OD N/S	1
2	0712136	SCREEN, SCRAP ASSY	1
3	0512107	THERMOMETER, 7 FT. CAPILLARY (Except 501HT)	1
4	0512169	HEATER, 120VAC 750W (For Low Temp.120VAC Models Only) (201HTN, 201LT, 401HTN 501HTN, 501LT)	1
----	0512168	HEATER, 230VAC 1200W (201HT, 501HT) Prior to S/N 14326	1
----	0512426	HEATER, 230VAC 2000W (201HT, 501HT) Beginning with S/N 14326 and above (for all except 501HT) Beginning with S/N 14191 and above for 501HT	1
5	D500615	FLANGE, PUMP SUCTION	1
6	0507323	THERMOSTAT, WASH TANK	1
7	D80208	GASKET, PUMP SUCTION	1
8	D500603	ELBOW, PUMP SUCTION	1
9	D80305	GASKET, ELBOW	1
10	108447	CAP, 1 1/4 PLASTIC	1
11	0512322	CLAMP, HOSE 1-13/16 - 2-3/4 MAX S/S	2
12	0501501	WASHER, SPLIT LOCK 1/4i 304SS	4
13	0501539	NUT, HEX SS 1/4-20	4
14	0503718	FOOT, ADJUSTING	1
15	0501411	SCREW, 10-32 X 1/4 RH SLOT SS	1
16	0501379	SWITCH, 15A	1
17	0312096	BRACKET, DOOR SWITCH	1
18	112612	THERMISTOR, 10k 2 WIRE ASSY (501HT Only)	2
19	0312144	BRACKET, WASH PUMP	1
20	0502571	CLAMP, HOSE GEAR HOSE 1-1/2” SS	2
21	0512118	HOSE, PUMP SUCTION	1
22	0512119	HOSE, PUMP DISCHARGE	1
23	113604	THERMOSTAT, HIGH LIMIT	1
24	0508872	ADAPTOR, THERMOMETER	1
	0512299	ADAPTOR, THERMISTOR (501HT ONLY)	1
25	201029	NUT, LOCK 1/2 INCH NI PLATED	2
26	0508873	ADAPTOR, THERMOSTAT (NOT SHOWN)	1
27	0508752	4-40 X 5/8” SCREW	2
28	108954	6-32 LOCK NUT N/S	2
29	0501836	O-RING, ADAPTER	2

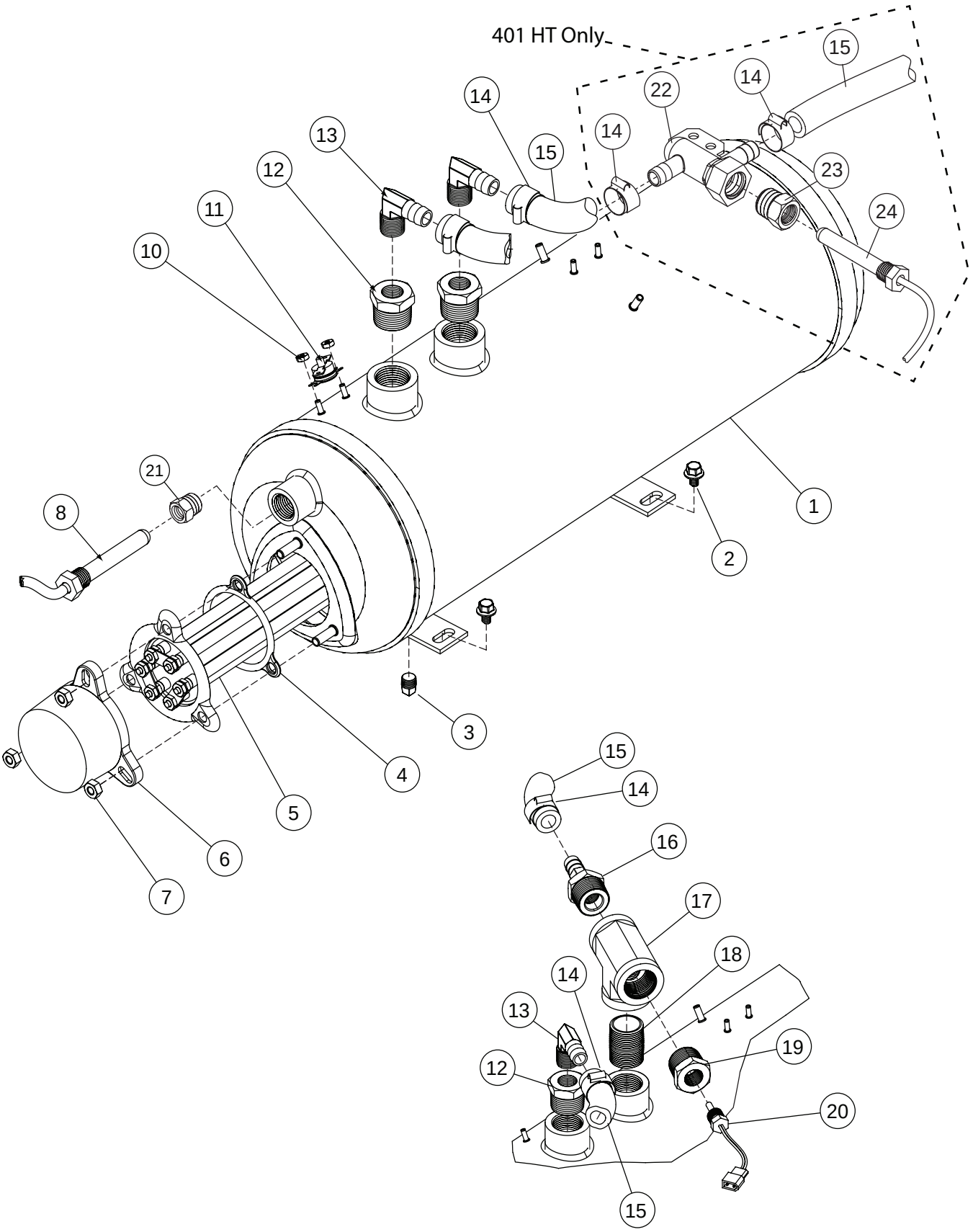
401 HT Only
1
2
3
4
5
6
7
8
10
11
12
13
14
15
16
17
18
19
20
21
22
23
24

Item No.	Part No.	Description	Qty.
1	0509042	BOOSTER TANK	1
2	0512185	BOLT, HEX FLANGE 1/4-20 X 3/8 SS	2
3	0508817	PLUG, 1/8 HEX COUNTERSUNK	1
4	109985	SEAL, ELECTRIC HEATER FLANGE	1
5	111235	HEATER 5/6.6KW 208/240V	1
	111233	HEATER 7.5/10KW 208/240 (70 DEGREE RISE)	1
6	H161123	COVER,HEATING ELEMENT	1
7	0501539	NUT, HEX SS 1/4-20	6
8	109069	THERMOSTAT, BOOSTER (*Prior to S/N W14478)*	1
---	0512108	THERMOSTAT, BOOSTER (*Beginning with S/N W14478 and above)* *(Order Item 21 with this thermostat)*	1
9	0501501	WASHER, SPLIT LOCK 1/4i 304SS (NOT SHOWN)	3
10	108954	NUT, GRIP 6X32 NYLON INSERT SS	2
11	110562	THERMOSTAT, HIGH LIMIT	1
12	0508840	BUSHING, 3/4MPT X 3/8FPT BRASS	2
13	0502653	ELBOW, 90 DEGR 3/8MPTX1/2 HOSE	2
14	0503679	CLAMP, SS GEAR-MIN. 5/16-MAX.7/8	8
15	107417	HOSE, RUBBER 1/2ID X .84OD	9FT
16	0512297	COUPLER, 1/2 HOSE X 3/4 NPT (501 HT ONLY)	1
17	102525	TEE (501 HT ONLY)	1
18	100184	NIPPLE 3/4 NPT (501 HT ONLY)	1
19	0512298	BUSHING REDUCING 1/8” NPT X 1/2” NPT (501 HT ONLY)	1
20	112612	THERMISTOR (501HT ONLY)	1
21	0512425	BUSHING, THERMOSTAT *(Must be ordered with P/N 0512108 Thermostat)*	1
22	0512857	TEE, RINSE THERMOMETER (401HT ONLY)	1
23	0512941	FITTING, BOOSTER THERMOMETER (401HT ONLY)	1
24	0512107	THERMOMETER, 2” DIAL (401HT ONLY)	1

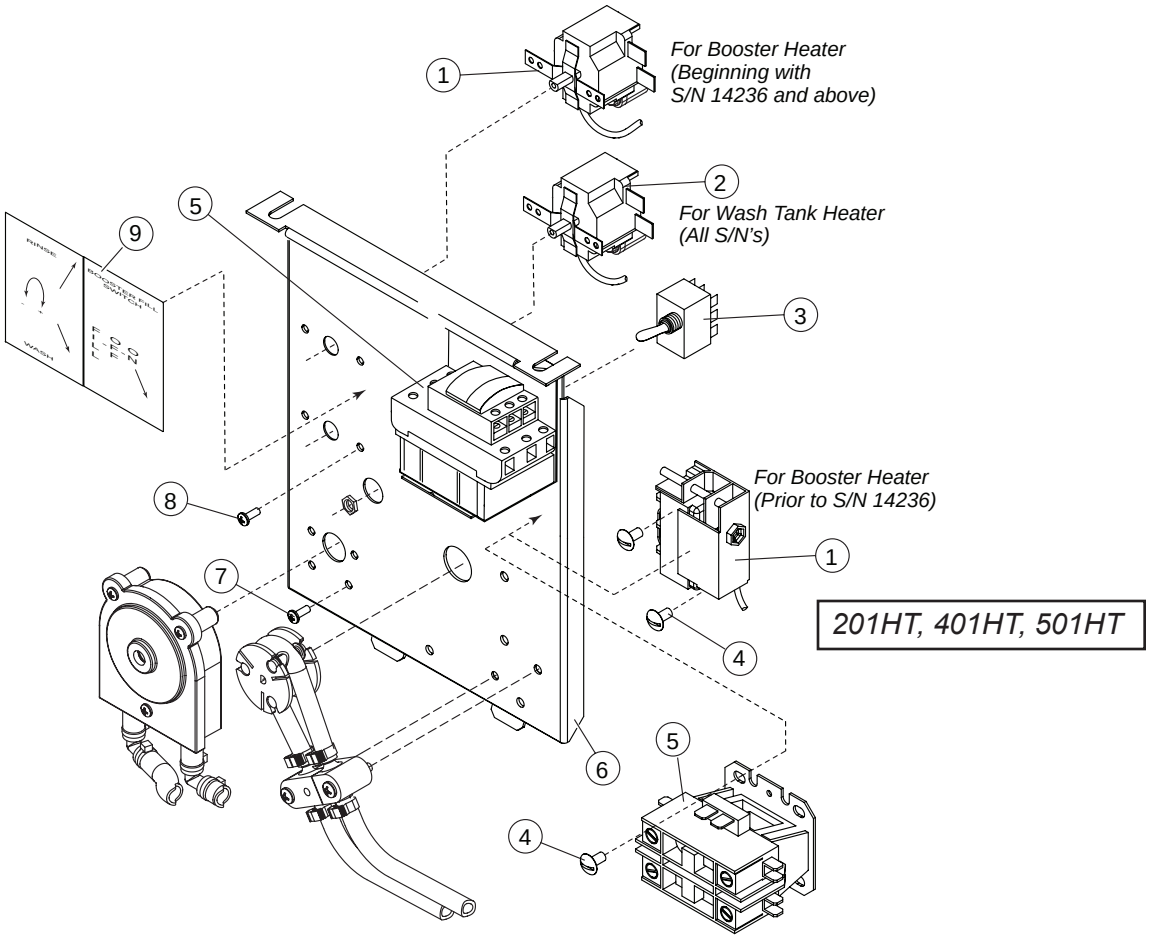

201HT, 401HT, 501HT

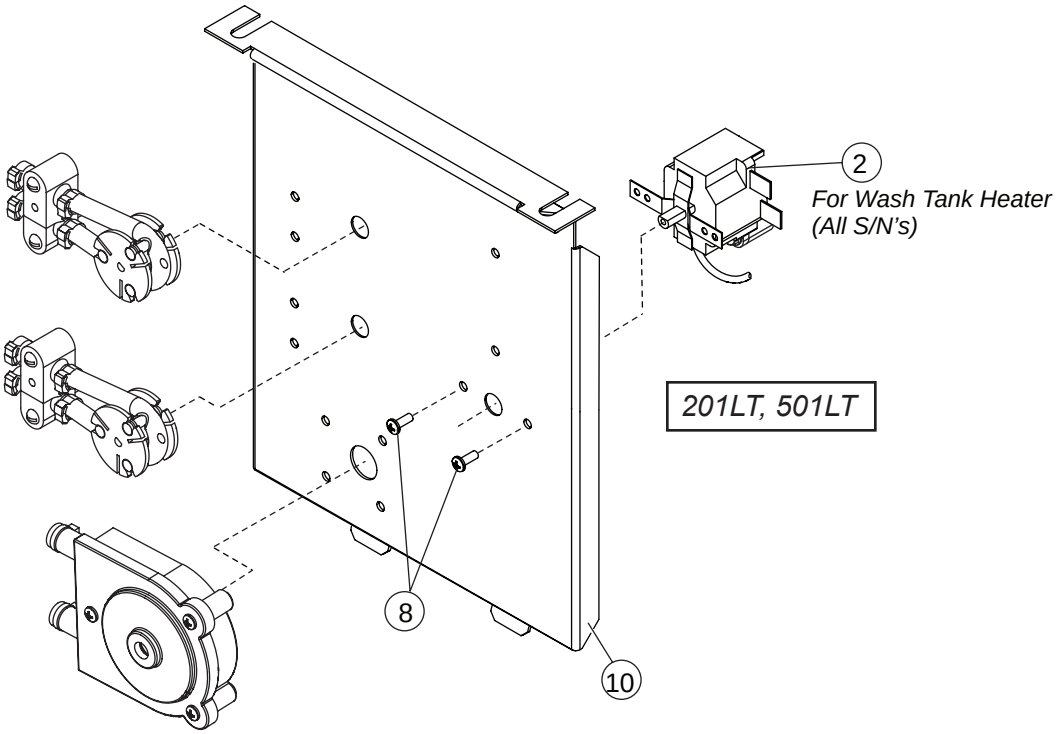

201LT, 501LT

Item No.	Part No.	Description	Qty.
1*	0512108	THERMOSTAT, BOOSTER *(Beginning with S/N W14236 and above)* (501HT, 401HT, 201HT)	1
1	109069	THERMOSTAT, BOOSTER *(Prior to S/N W14236)* (501HT, 401HT, 201HT)	1
2	0507323	THERMOSTAT, WASH TANK *(All S/N's)* (501HT, 401HT, 201HT)	1
3	0501373-1	SWITCH, 3-POSITION TOGGLE (501HT, 401HT, 201HT)	1
4	0501412	SCREW, TRUSS SLOT SS 10-32 X 3/8	4
5	112518	CONTACTOR, 2-POLE 120V *(Prior to S/N W14236)* (501HT, 401HT, 201HT)	1
5	0512432	CONTACTOR, 3-POLE 120V *(Beginning with to S/N W14236 and above)* (501HT, 401HT, 201HT)	1
6	0312173-1	BRACKET, CHEMICAL PUMP, THERMOSTAT (501HT, 401HT, 201HT)	1
7	0504822	SCREW, 8-32 X 1/2 PAN HD PH SST	8
8	0501450	SCREW, NIBS RH 6-32 X 3/16 PHIL.SS	4
9	0512444	LABEL, RINSE-WASH, BSTR. FILL (501HT, 401HT, 201HT)	1
10	0312173-3	BRACKET, CHEMICAL PUMP, THERMOSTAT (501LT, 201LT)	1

** P/N 109069 can be used an alternative replacement part beginning with S/N W14478*

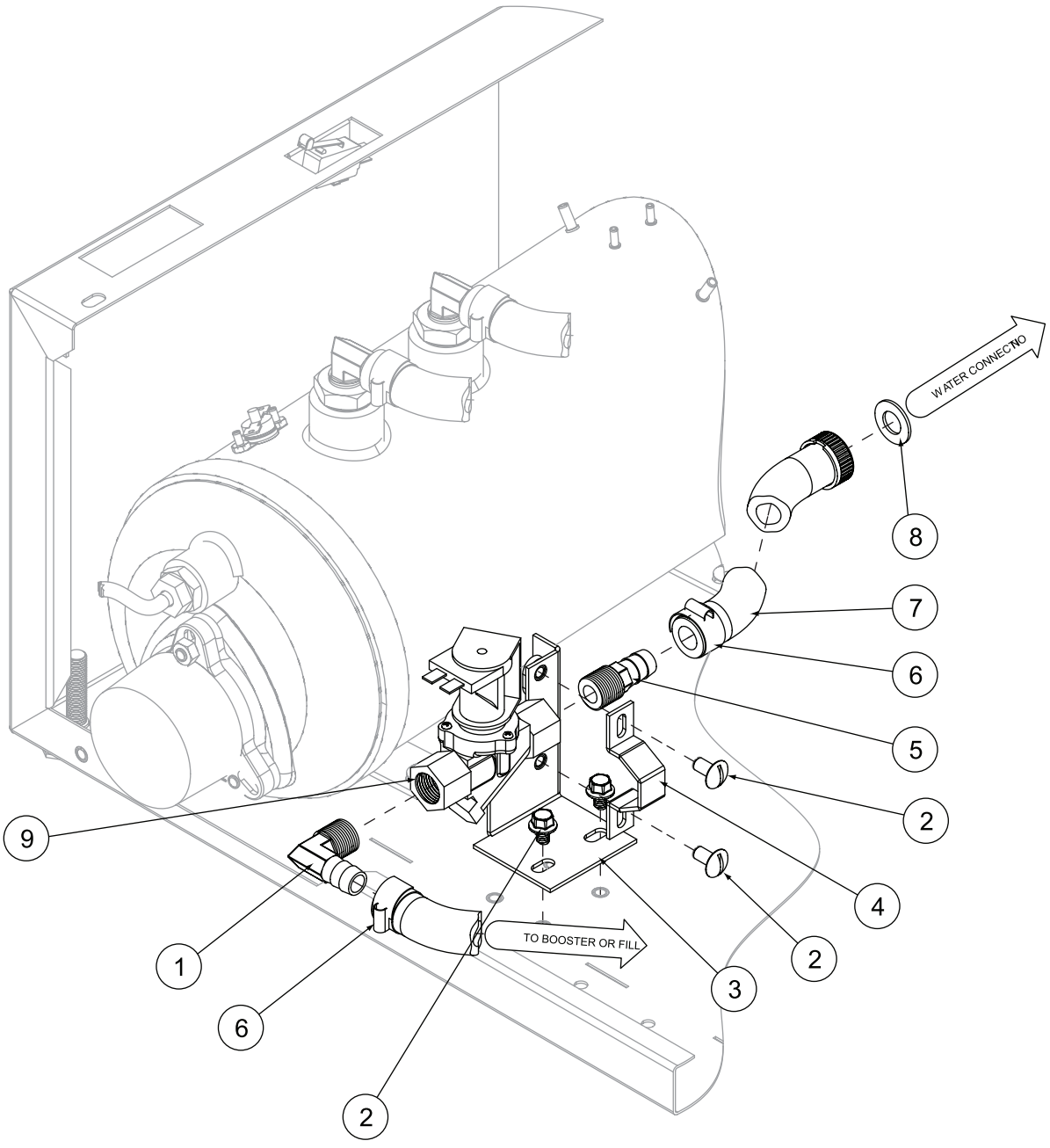
WATER CONNECTION
TO BOOSTER OR FILL
1
2
2
2
3
4
5
6
6
7
8
9

Item No.	Part No.	Description	Qty.
1	0502653	ELBOW, 90 DEGR 3/8MPTX1/2 HOSE	1
2	0512185	BOLT, HEX FLANGE 1/4-20 X 3/8 SS	4
3	0300065	SUPPORT, VALVE	1
4	0300203	CLAMP, VALVE	1
5	0502618	HOSE BARB, 1/2 X 3/8 MPT	1
6	0503679	CLAMP, SS GEAR-MIN. 5/16-MAX.7/8	1
7	0509526	HOSE, 1/2 X 7FT FEM.GARD.ADAPT.	1
8	0505320	WASHER, 1” O.D. GARDEN HOSE	1
9	0504952	VALVE, FILL 5.0 GPM BREAKDOWN ON NEXT PAGE	1

Fill Valve Assy - All Models

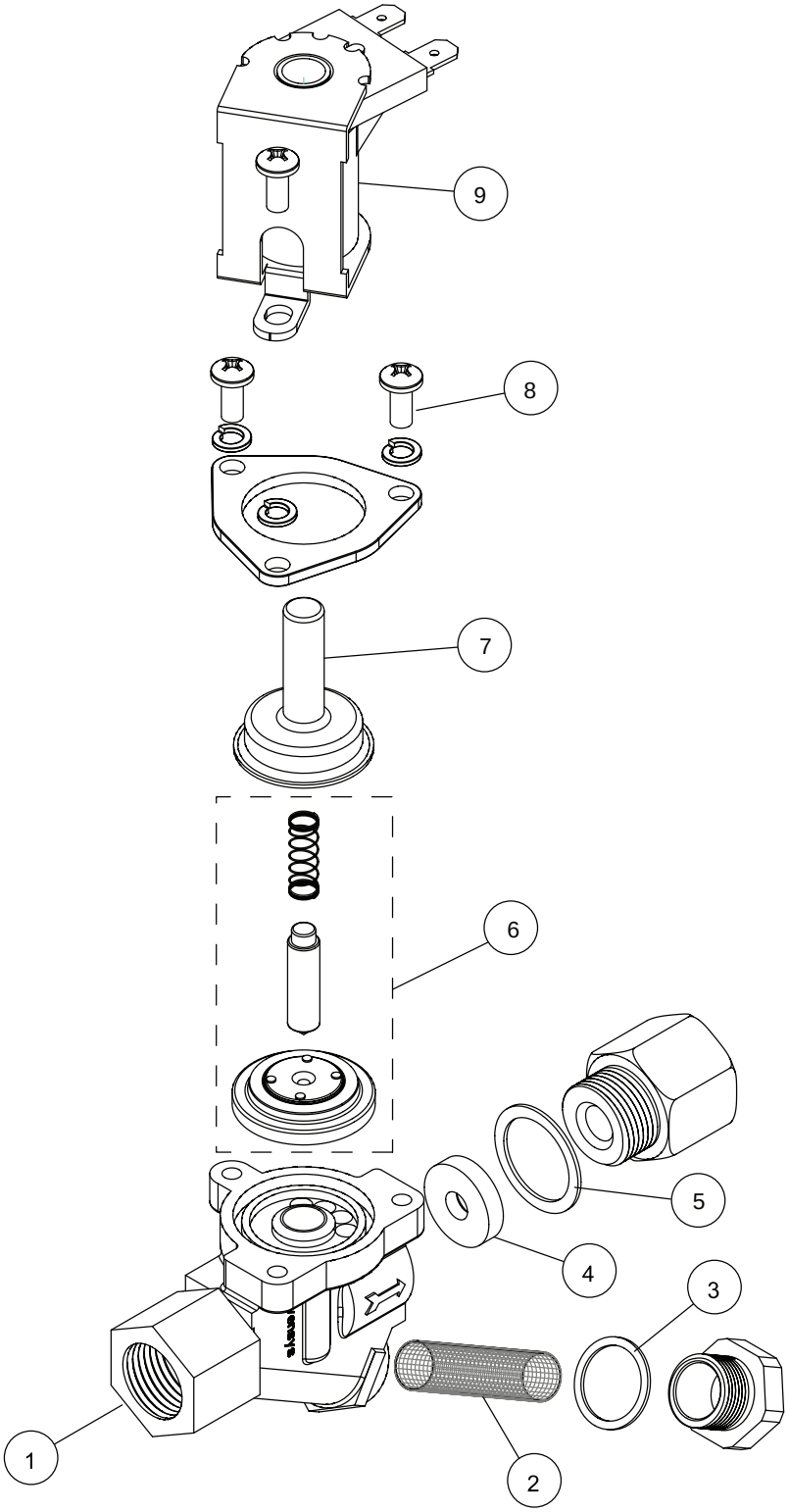

Item No.	Part No.	Description	Qty.
1	0504952	SOLENOID VALVE, COMPLETE (5.0 GPM)	1
2	0502803	STRAINER SCREEN, SOLENOID VALVE	1
3	0502804	WASHER, SEAL	1
4	0504958	WASHER, FLOW 5.0 GPM	1
5	0502807	GASKET	1
6	0502811	KIT, REBUILD	1
7	0505229	GUIDE	1
8	0501406	SCREW, SLOT SS RH 8-32 X 1/2	3
9	0505235	COIL, 115V 60HZ 10W	1

Fill Chute Assy - All Models

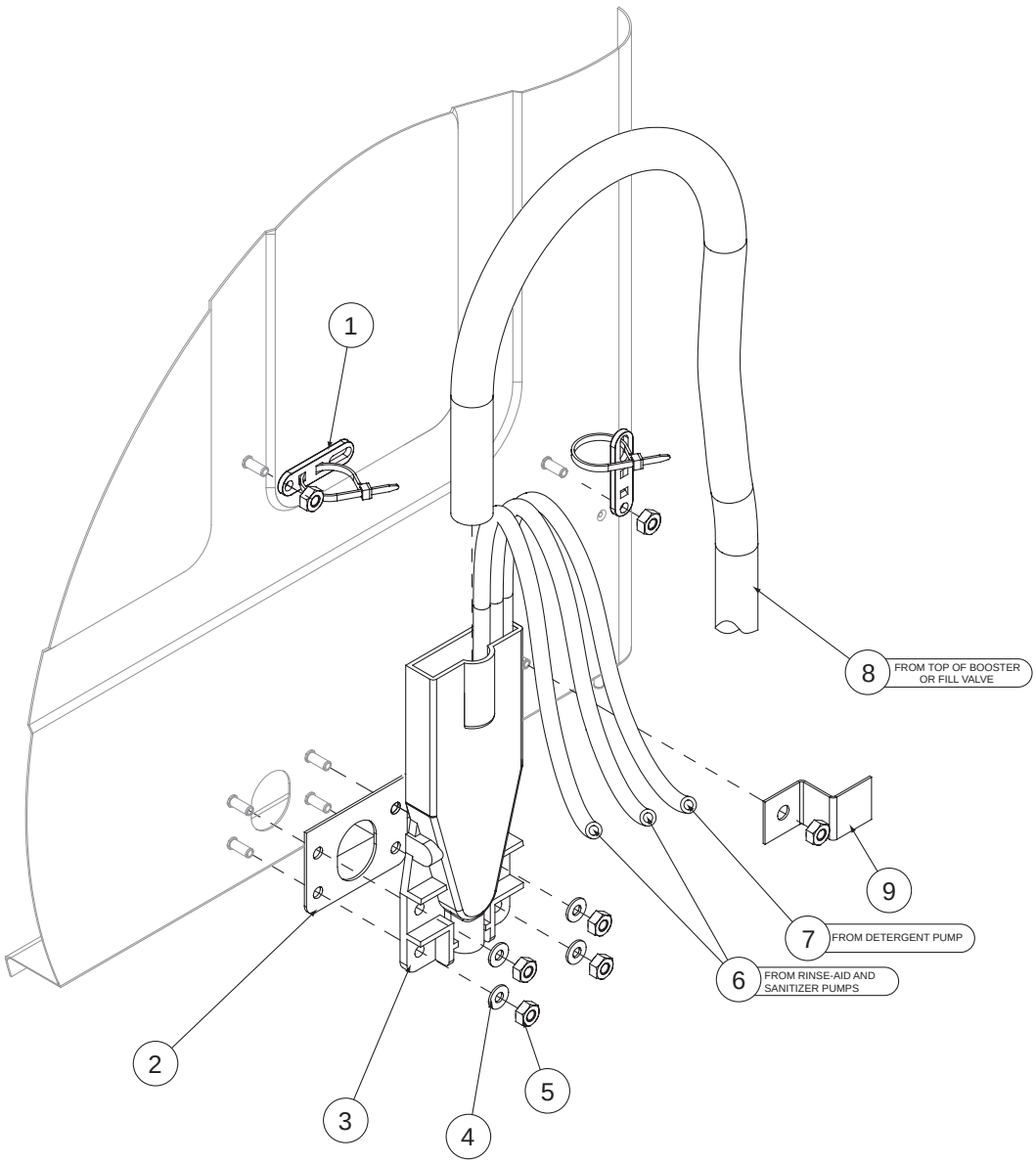

Item No.	Part No.	Description	Qty.
1	106090	TIE PLATE	2
2	0509048	GASKET, INLET CHUTE	1
3	0508867	CHUTE, INLET INJ.MOLDED	1
4	0507709	WASHER, FLAT #10 SS	4
5	0503722	NUT, HEX 10-32 SS	6
6	0502666	HOSE, 1/8ID X 1/4OD PVC (RINSE AID AND SANITIZER PUMP)	8 ft.
7	0502667	HOSE, 1/4ID X 3/8OD PVC (DETERGENT PUMP)	8 ft.
8	107417	HOSE, RUBBER 1/2ID X .84OD	5 ft.
9	0308822	CLIP, HOSE	1

Sprayarm Assy. - All Models

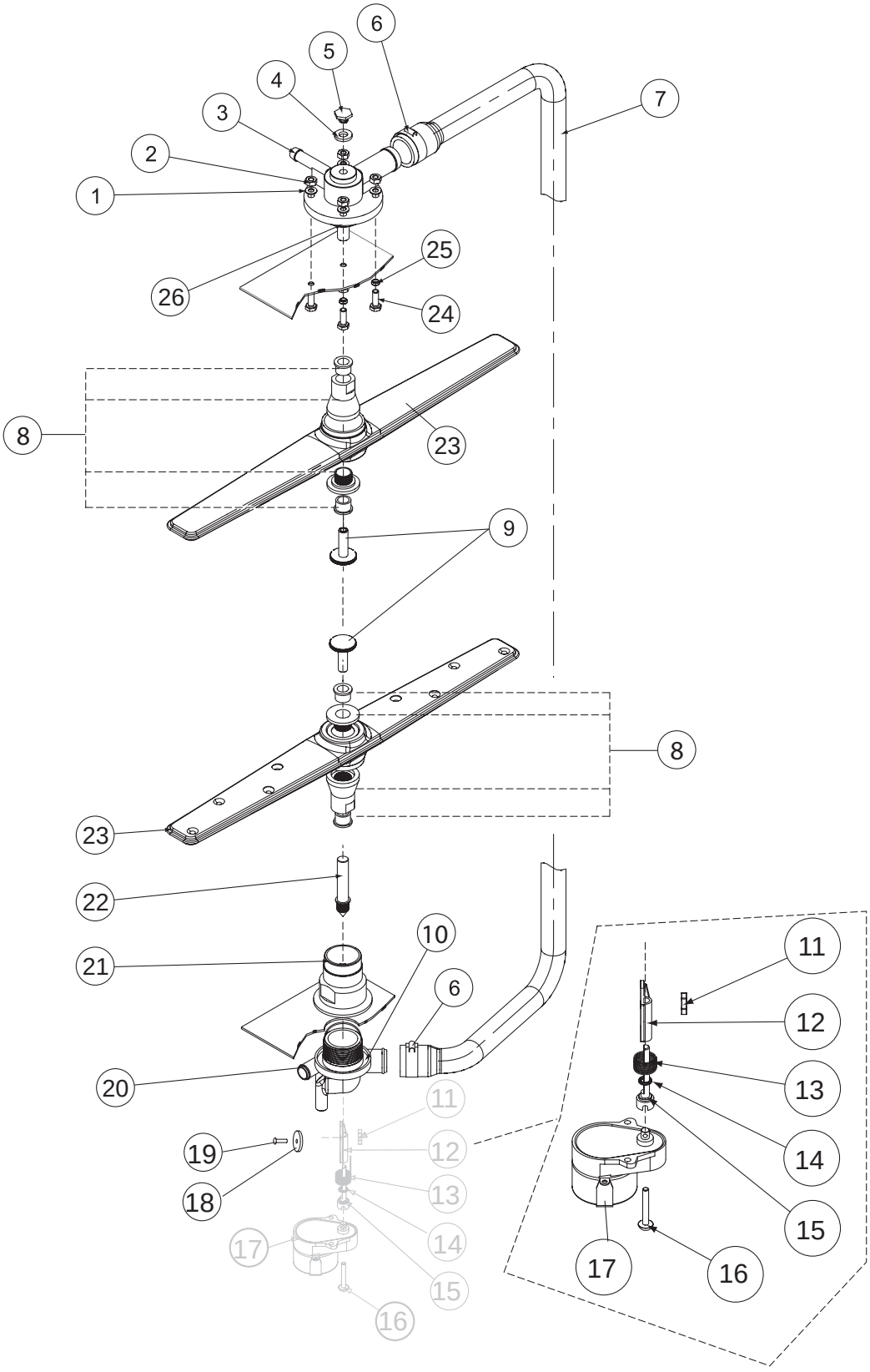

Item No.	Part No.	Description	Qty.
1	0501478	WASHER, 17/64IDX9/16 OD18G SS	4
2	107967	NUT, HEX SS 1/4-20 NYLON INSERT	4
3	H35509	HUB,UPPER WASH ARM	1
4	107873	WASHER, PACKING	1
5	110215	SCREW, RETAINING	1
6	0502571	CLAMP,HOSE GEAR HOSE 1-1/2” SS	2
7	0512120	HOSE, UPPER WASH ARM,	1
8*	0712749	ASSY., BEARING	2
9	0512129	NUT, WASH ARM	2
10	0512133	O RING, 2 1/8 OD X 1 3/4 ID X 3/16 #327 SILICONE	2
11	100194	NUT, GRIP 10-32	1
12	0512104	FLAP, DRAIN	1
13	0512126	SPRING, TORSION	1
14	0512130	O RING #106	2
15	0512128	SHAFT, DRAIN FLAP	1
16	104883	SCREW 6-32 X 3/8 RD HD SS-SLOT	2
17	0712123	MOTOR, DRAIN 115V	1
18	0512127	GASKET, DRAIN	1
19	0501412	SCREW TRUSS SLOT SS 10-32X3/8	1
20	0512103	MANIFOLD, LOWER F&D	1
21	0512066	HUB, LOWER WASHARM	1
22	0512125	SHAFT, LOWER F&D	1
23	H420548	WASH ARM, STAMPED	2
24	0501420	BOLT, 1/4 X 1i SS HEX HEAD	4
25	0501481	WASHER, NYLTITE	4
26	0512133	O RING, 2 1/8 OD X 1 3/4 ID X 3/16 #327 SILICONE	1
---	0712367	DRAIN MANIFOLD ASSY COMPLETE (includes items11-19)	1
---	H420548	ASSY, WASH ARM COMPLETE (includes items 8 and 23)	2

* Note:
The bearing assembly, P/N 0712749, includes 2 bearings, 1 locknut, and 1 wash arm hub. The individual parts are no longer available as separate replacement parts.

Main Terminal Block, Timer Board - All Models

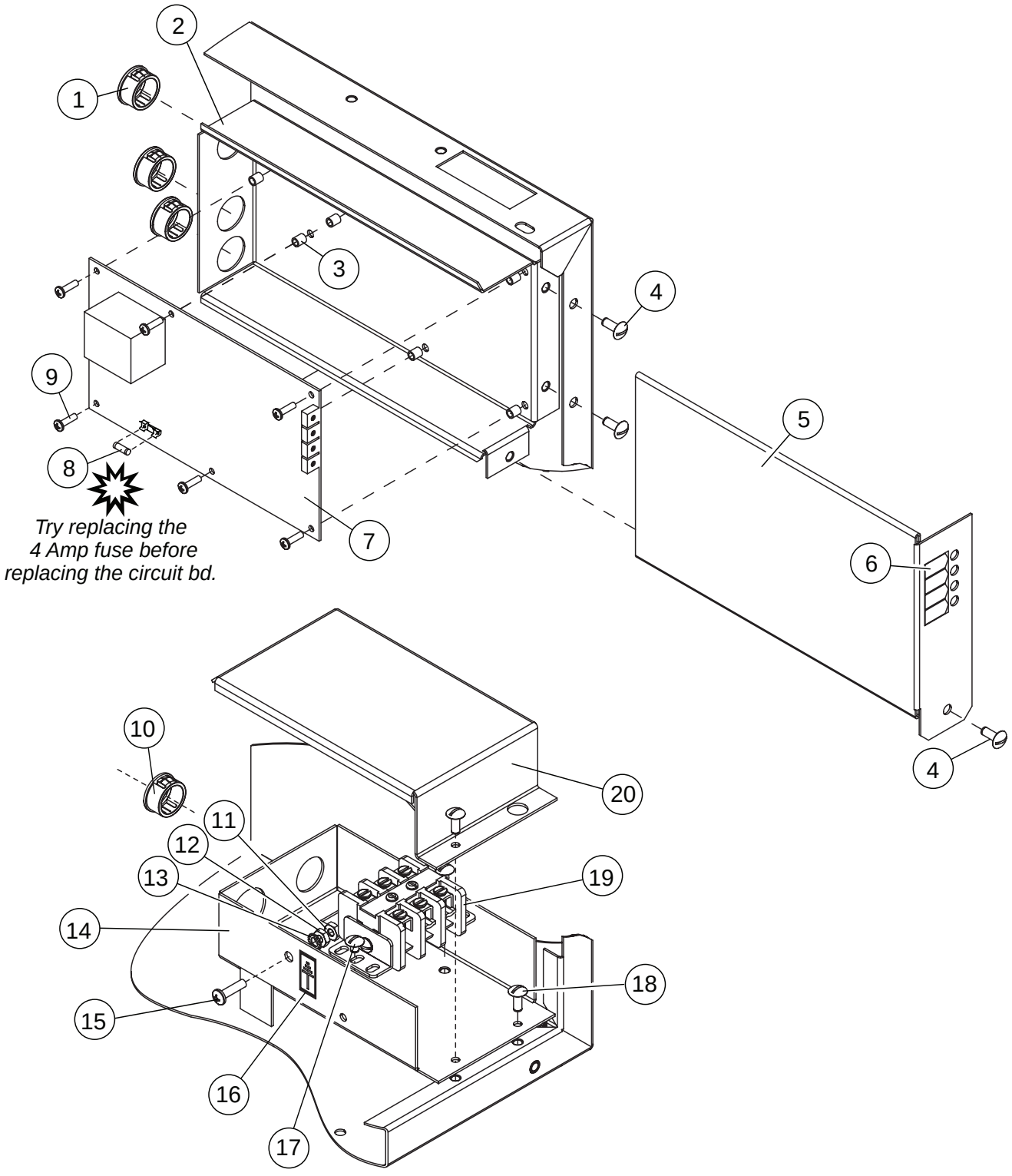

Item No.	Part No.	Description	Qty.
1	107964	BUSHING, SNAP (ALL)	3
2	0312188	BASE, TIMER ENCLOSURE	1
3	0508710	SPACER, 5/16	6
4	0501411	SCREW, 10-32 X 1/4 RH SLOT SS	3
5	0312189	COVER, TIMER ENCLOSURE	1
6	0512243	LABEL, ADJUSTMENT	1
7	0712105	TIMER CKT BD. SOLID STATE	1
8	0512373	FUSE, 4A 250VAC,	1
9	106695	SCREW, 6-32 X 1/2 ROUND HD PHI	6
10	0503647	BUSHING, STRAIN RELIEF	1
11	0501533	NUT, BRASS 10-32	2
12	0501472	WASHER, FLAT 1/8 X 1/2 BRASS	1
13	0501493	WASHER LOCK #10 EXT. TOOTH, BRASS	1
14	0312338	BASE, ENCLOSURE, ELEC. CONN	1
15	0501403	SCREW, BRASS RH 10-32X3/4 SLOT	1
16	0503592	LABEL, GROUND	1
17	0501412	SCREW TRUSS SLOT SS 10-32X3/8	2
18	100213	SCREW, 10-32 X 1/4", TRUSS HD.	2
19	0504951	BLOCK, TERMINAL, 3-POLE *(Prior to S/N W14236)* 501HT, 401HT, 201HT Only	1
---	0509527	BLOCK, TERMINAL, 4-POLE *(Beginning with S/N W14236 and above)* 501HT, 401HT, 201HT Only	1
20	0312339	COVER, ENCLOSURE, ELEC. CONN	1

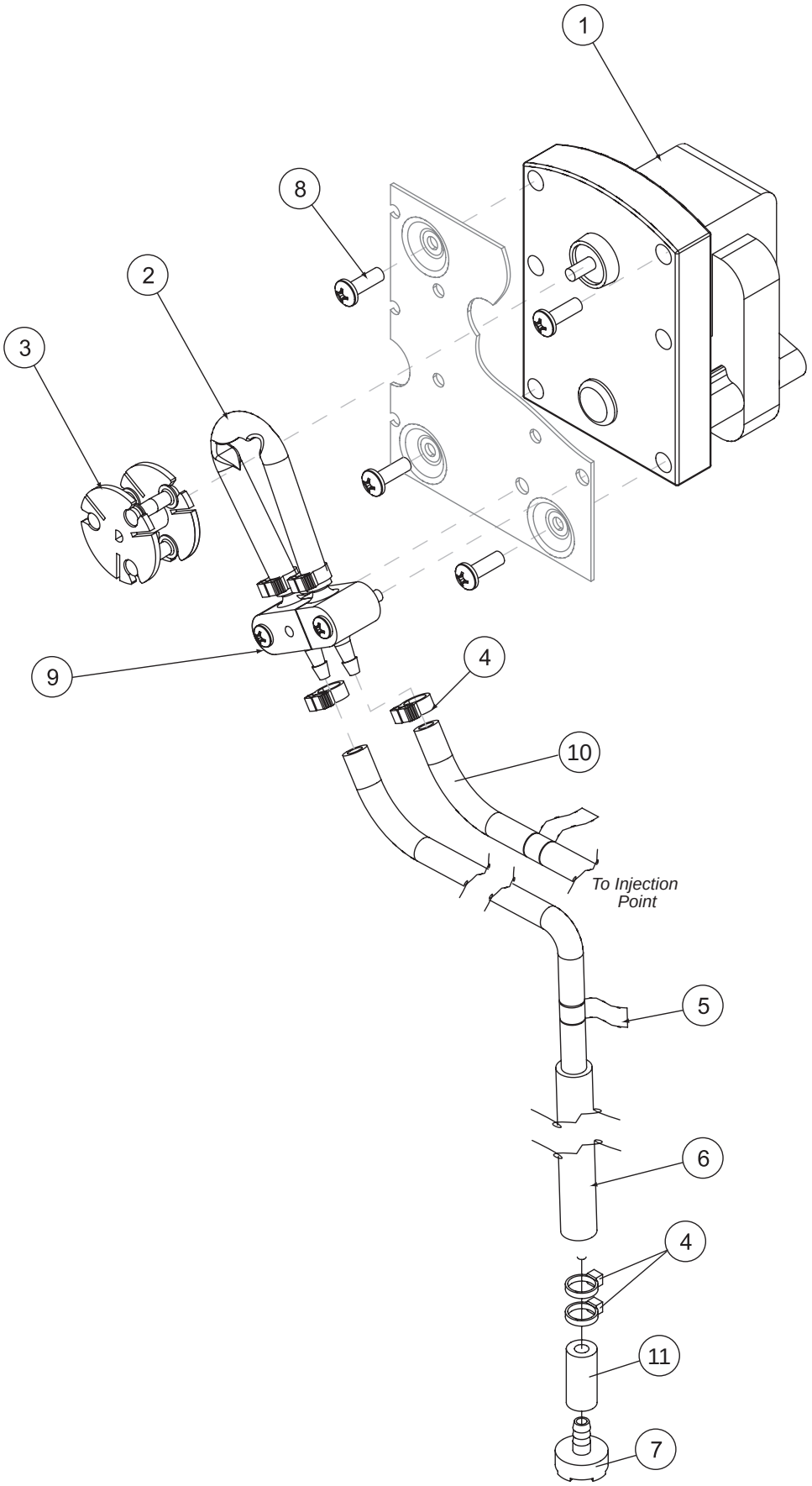
1
8
2
3
9
4
10
To Injection Point
5
6
4
11
7

Item No.	Part No.	Description	Qty.
1	0503756	MOTOR, INJECTOR PUMP	1
2	0706635	TUBE, ELEMENT ASSEMBLY 45CC	1
3	0707142	ROTOR, ASSEMBLY	1
4	0501519	TIE, NYLON 4i	4
5	0505483	LABEL, RINSE AID	1
----	0503694	LABEL, SANITIZER	1
6	0306363	TUBE,1/2IDX11-7/8LG. STIFFENER	1
7	0501869	STRAINER	1
8	0504822	SCREW, 8-32 X 1/2 PAN HD PH S.S	1
9	0506589	SCREW, PAN 6-32X7/8 SS PHILLIP	2
10	0502666	HOSE, 1/8ID X 1/4OD	A/R
11	112759	TUBE, PUMP 1/8” id X 2” LG.	1

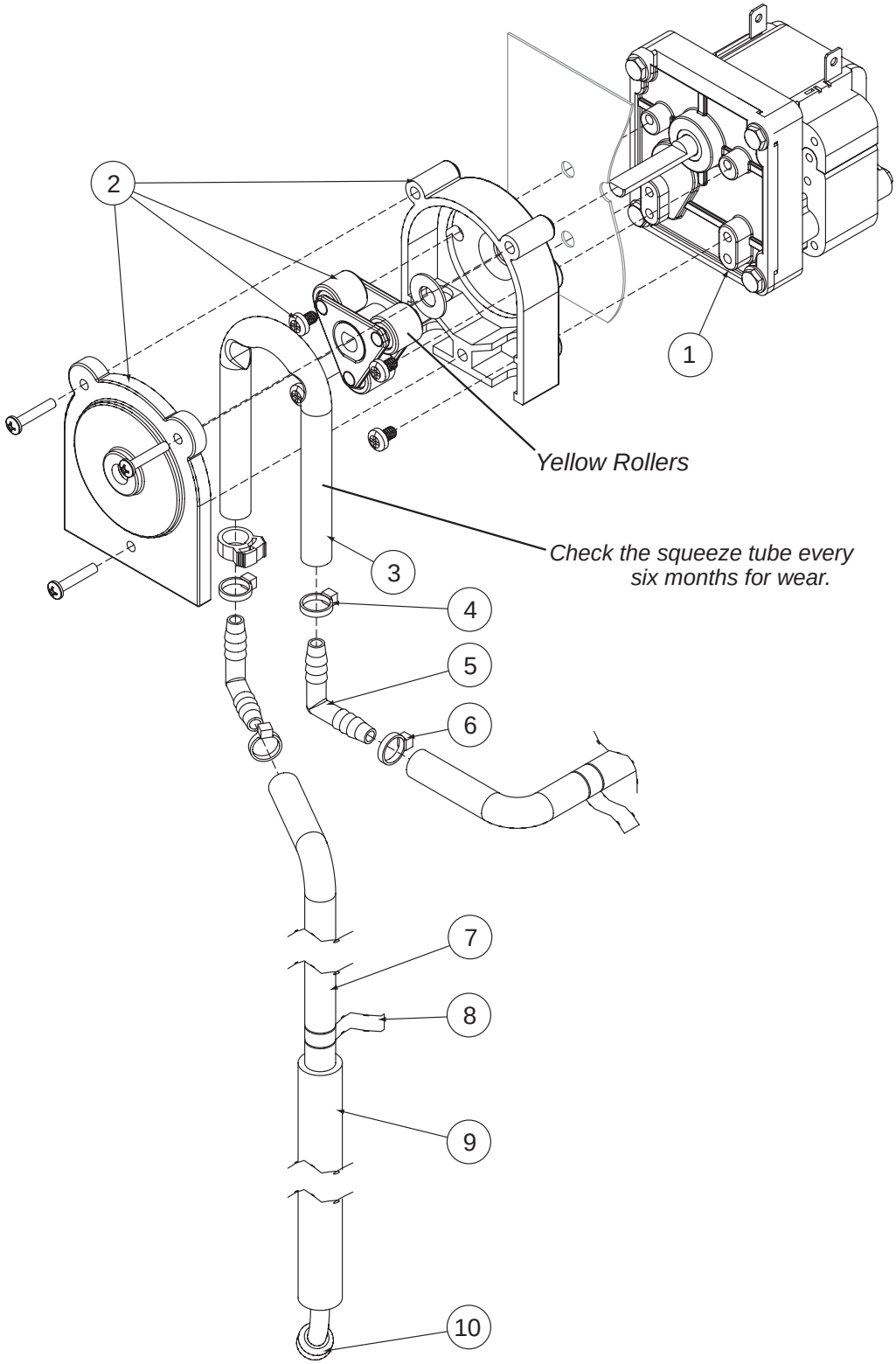
2
1
Yellow Rollers
Check the squeeze tube every six months for wear.
3
4
5
6
7
8
9
10

Item No.	Part No.	Description	Qty.
1	0510870-1	GEARMOTOR,108 RPM, 115/60/1	1
2	114203	PUMP HD KIT, PERISTALIC	1
3	114202	TUBE ASY,SANTOPRENE,1/4IDX8.25	1
4	0501519	TIE, NYLON 4i	2
5	0502644	ELBOW, 1/4 HOSE BARB	1
6	0501519	TIE, NYLON 4i	4
7	0502667	HOSE, 1/4ID X 3/8OD	A/R
8	0503695	LABEL, DETERGENT	1
9	0306363	TUBE,1/2IDX11-7/8LG. STIFFENER	1
10	0501869	STRAINER	1

Control Panel - (201HT/HTN, 201LT, 401HT/HTN, 501LT)

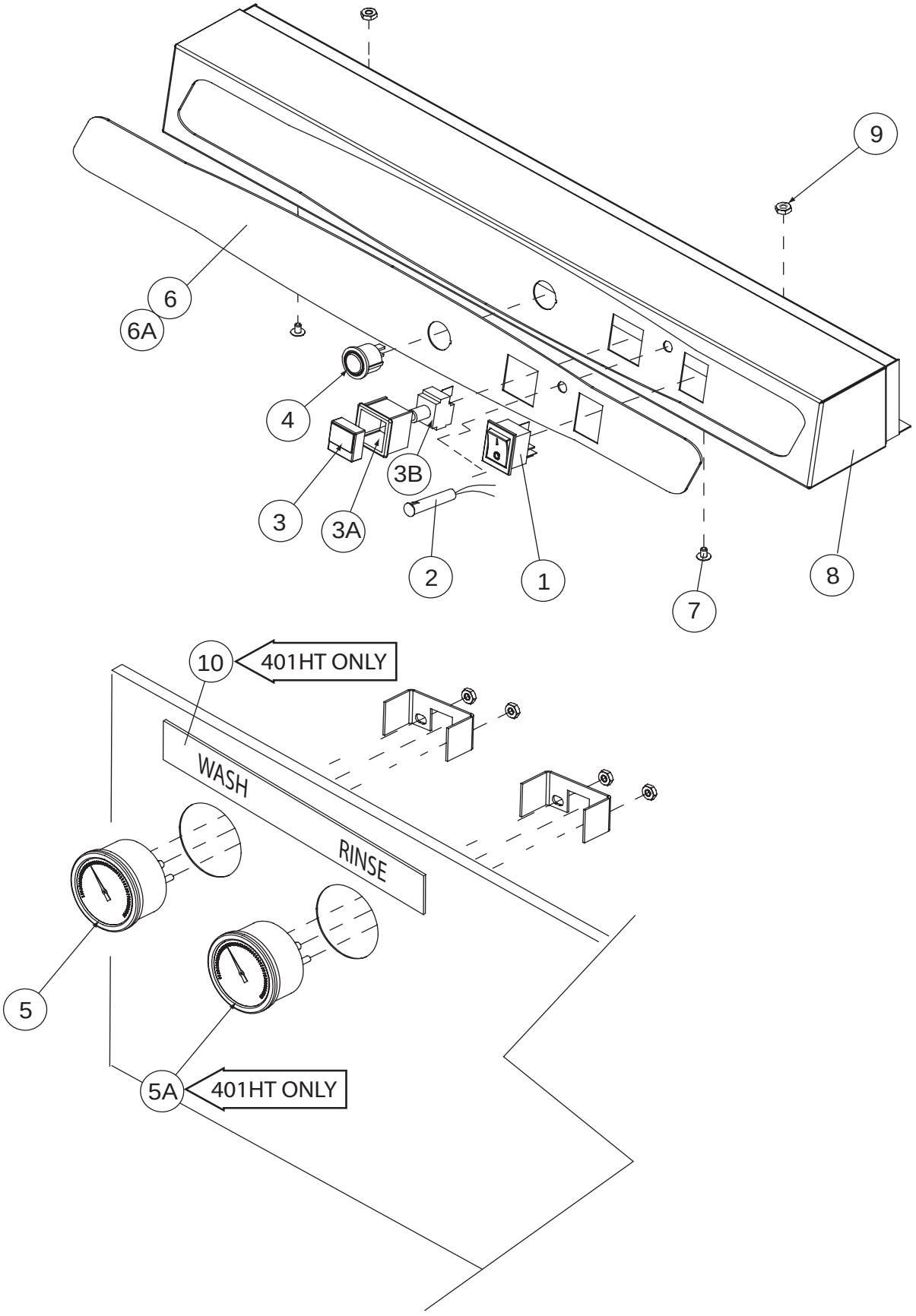

Item No.	Part No.	Description	Qty.
1	0512220	SWITCH, ROCKER DPDT, 120VAC, (201HTN,	1
		201LT, 401HTN, 501LT, 501HTN	1
	0512221	SWITCH, ROCKER DPDT, 250VAC	1
		(201HT, 401HT)	1
2	0512232	LIGHT, INDICATOR, GREEN LED, 2VDC, (All Models)	1
3	0512218	PUSHBUTTON,GREEN	1
3A	0512217	HOUSING, SWITCH	1
3B	0512216	CONTACT, MOMENTARY	1
4	0512226	SWITCH, ROCKER, ROUND, SPDT, MOMENTARY	1
5	0512107	THERMOMETER	1
5A	0512107	THERMOMETER (401HT ONLY)	1
	(Rinse thermometer Beginning with S/N W100120006 and above)		
6	0512115	LABEL, (201HT/HTN, 401HT/HTN)	1
6A	0512329	LABEL, (201LT, 501LT)	1
7	0501408	SCREW, TRUSS, SLOT 8-32 X 1/4	4
8	0312183	PANEL, CONTROL, FRONT	1
9	0503580	NUT, 10-32	4
10	0512355	LABEL, WASH/RINSE THERMOMETER (401HT ONLY)	1
		(Beginning with S/N W100120006 and above)	

Control Panel with Digital Display - (501HT, 501HTN)

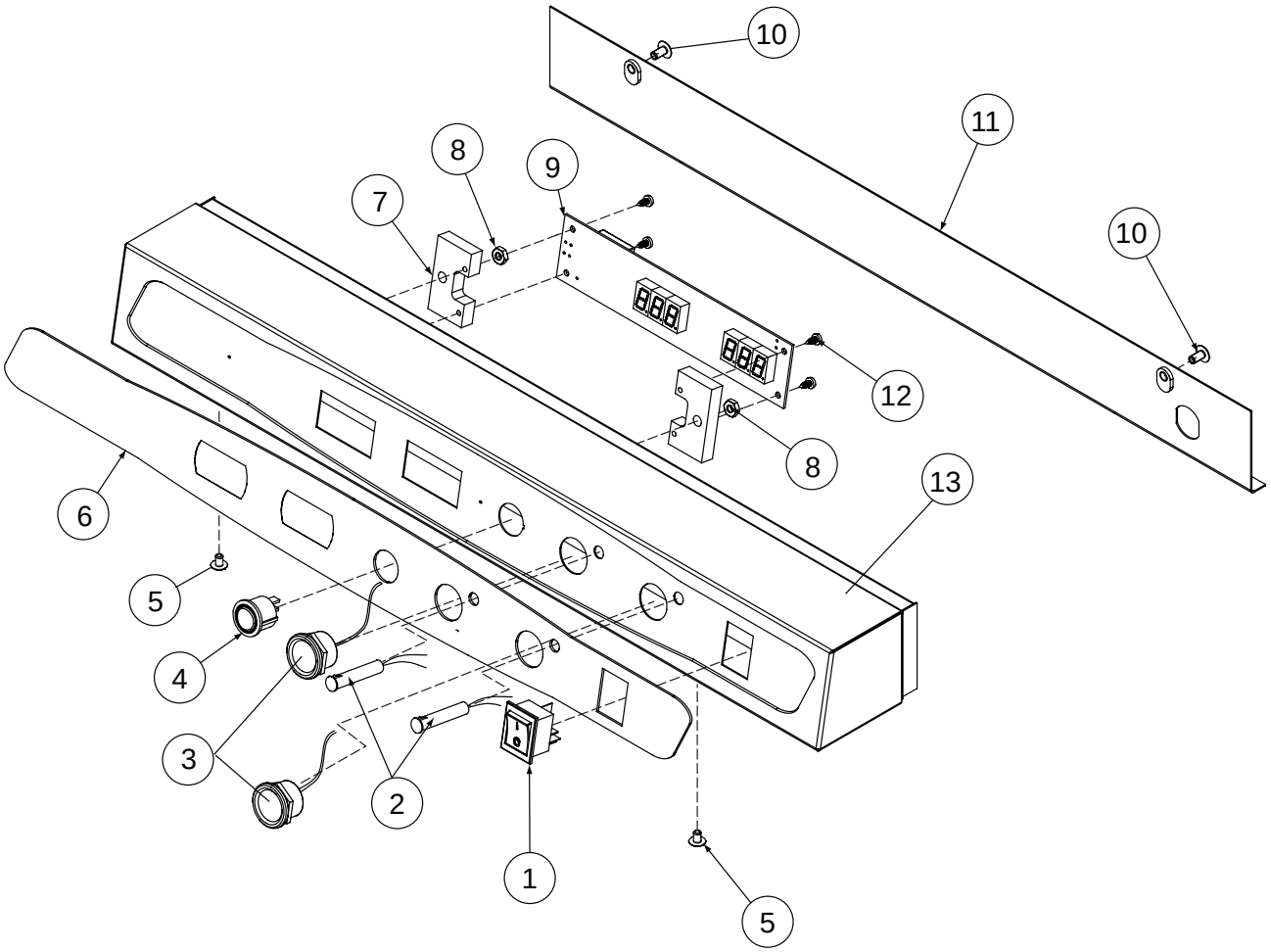

Item No.	Part No.	Description	Qty.
1	0512221	SWITCH, ROCKER DPDT, 250V NEON (501HT)	1
---	0512220	SWITCH, ROCKER DPDT, 120V NEON (501HTN)	
2	0512232	LIGHT, INDICATOR, GREEN LED, 2VDC	2
3	0512213	SWITCH, PIEZO	2
4	0512226	SWITCH, ROCKER, ROUND, SPDT, MOMENTARY	1
5	0501408	SCREW, TRUSS, SLOT SS 8-32 X 1/4	2
6	0512113	LABEL	1
7	0512357	SPACER, DIGITAL DISPLAY BOARD	2
8	0503580	NUT, 10-32	4
9	0512106	TEMPERATURE DISPLAY BOARD, DIGITAL	1
10	0501563	SCREW, #8 X 3/8	4
11	0312371	PANEL, REAR	1
12	0501412	SCREW, 10-32 X 3/8	4
13	0312181	PANEL, CONTROL CABINET	1
NS	0512362	HARNESS, DIGITAL DISPLAY BOARD	1
NS	0512223	HARNESS, CONTROL PANEL	1

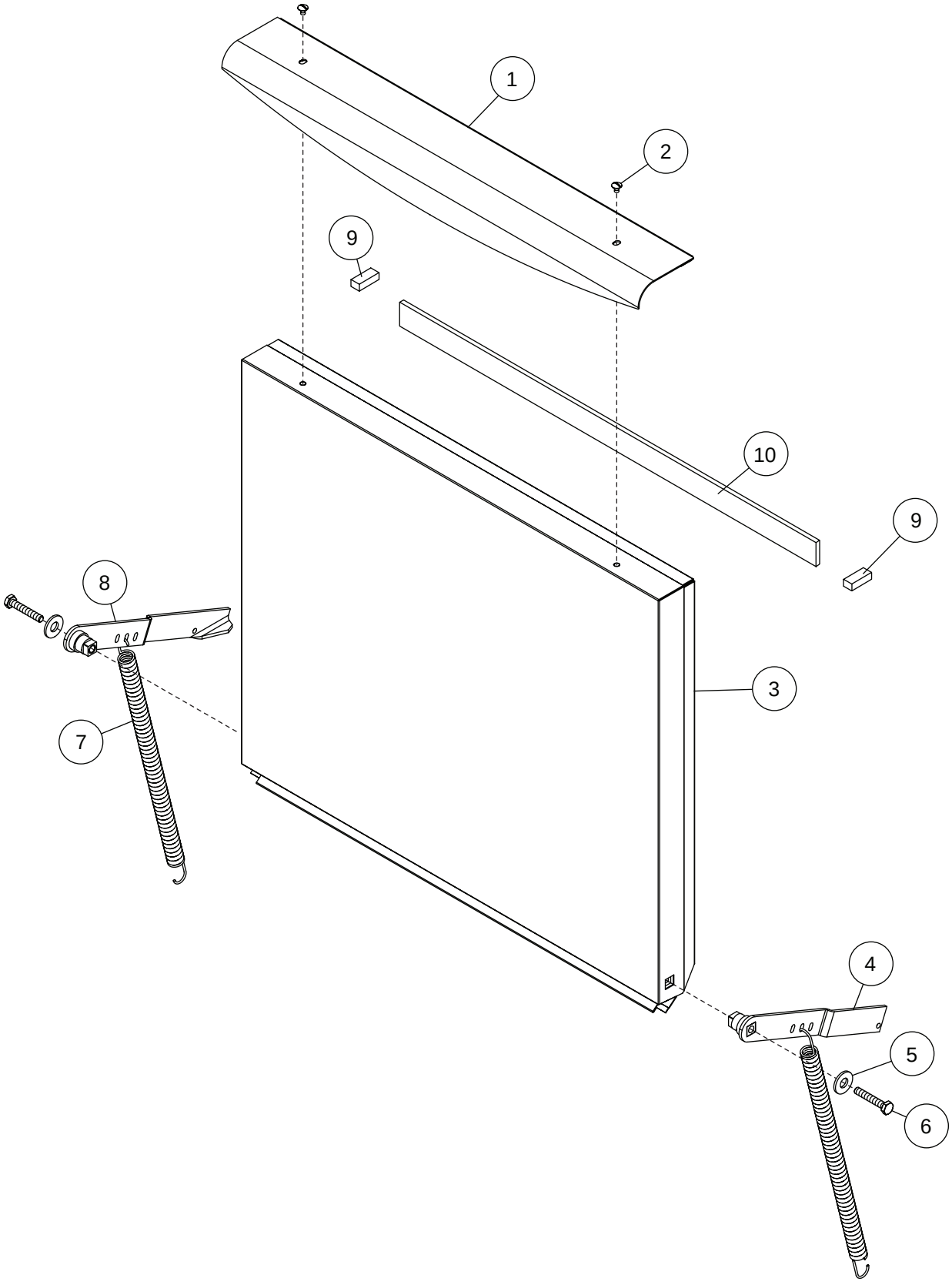
1
2
9
10
9
8
3
7
4
5
6

Item No.	Part No.	Description	Qty.
1	0312171	HANDLE, DOOR	1
	0312172	HANDLE, DOOR, 501HT ONLY	
2	0501408	SCREW, TRUSS SLOT SS 8-32 X 1/4	2
3	0712164	DOOR WELDED ASSY	1
4	0712162-1	HINGE, RH ASSY	1
5	0501476	WASHER,SS 9/32 X 5/8 OD	1
6	0501422	BOLT, HEX SS 1/4-20 X 1-1/2	1
7	0512122	SPRING, DOOR	2
8	0712162	HINGE, LH ASSY	1
9	0512320	GASKET, STEAM BLOCK	2
10	0512319	GASKET, TOP DOOR	1

Panel Assembly - All Models

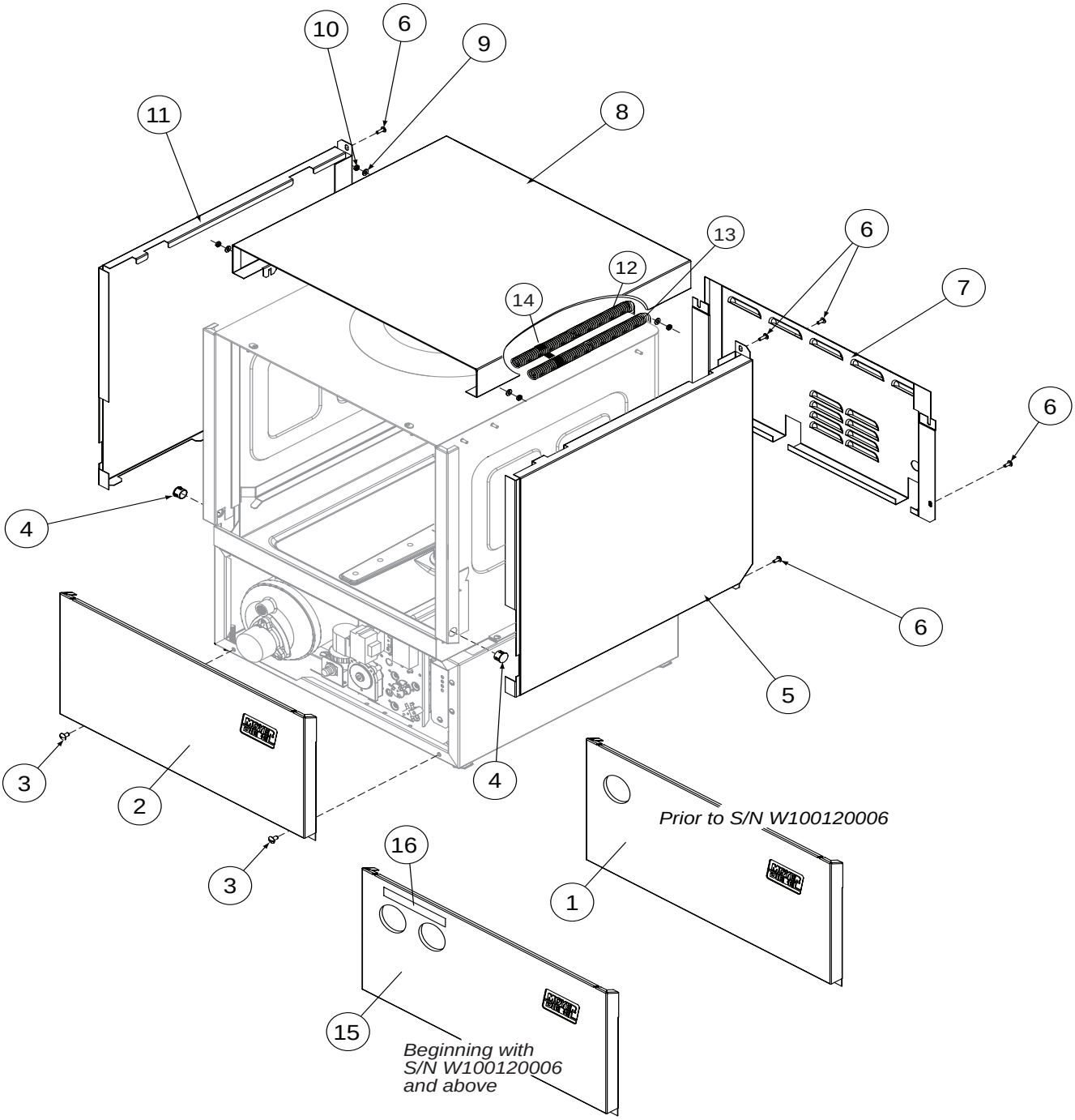

Item No.	Part No.	Description	Qty.
1	0312193	PANEL, FRONT (201HT/HTN, 201LT, 501LT)	1
---	0312193	PANEL, FRONT (401HT) (Prior to S/N W100120006)	1
2	0312372	PANEL, FRONT (501HT, 501HTN)	1
3	100779	SCREW 1/4-20X5/8 TRUSS SS PHIL	2
4	108826	GROMMET	2
5	0312174	PANEL, RH SIDE	1
6	0501412	SCREW TRUSS SLOT SS 10-32X3/8	2
7	0312191	PANEL, BACK	1
8	0312212	HOOD, MOYER DIEBEL	1
9	0501478	WASHER, 17/64IDX9/16 OD18G SS	4
10	0501539	NUT, HEX SS 1/4-20	4
11	0312175	PANEL, LH SIDE	1
12	0512157	CONDUIT, 1/2”	AR
13	0512158	CONDUIT, 3/8”	A/R
14	0512369	CLAMP	3
15	0312981	PANEL, FRONT (401HT) (Beginning with S/N W100120006 and above)	1
16	0512355	LABEL, WASH/RINSE THERMOMETER (Beginning with S/N W100120006 and above)	1

This Page Intentionally Left Blank

Electrical Schematics

Illustration	**Pg.**
Low Temp. *201LT, 501LT (All S/N's)*	56
High Temp. *201HTN, 401HTN, 501HTN (All S/N's)*	57
High Temp. *201HT, 401HT, 501HT (Prior to S/N 14236)*	58
High Temp. *201HT, 401HT, 501HT (Beginning with S/N 14236 above)*	59
High Temp. *501HT (Prior to S/N 14236)*	60
High Temp. *501HT (Beginning with S/N 14236 above)*	61
Timer Chart - All Models	62

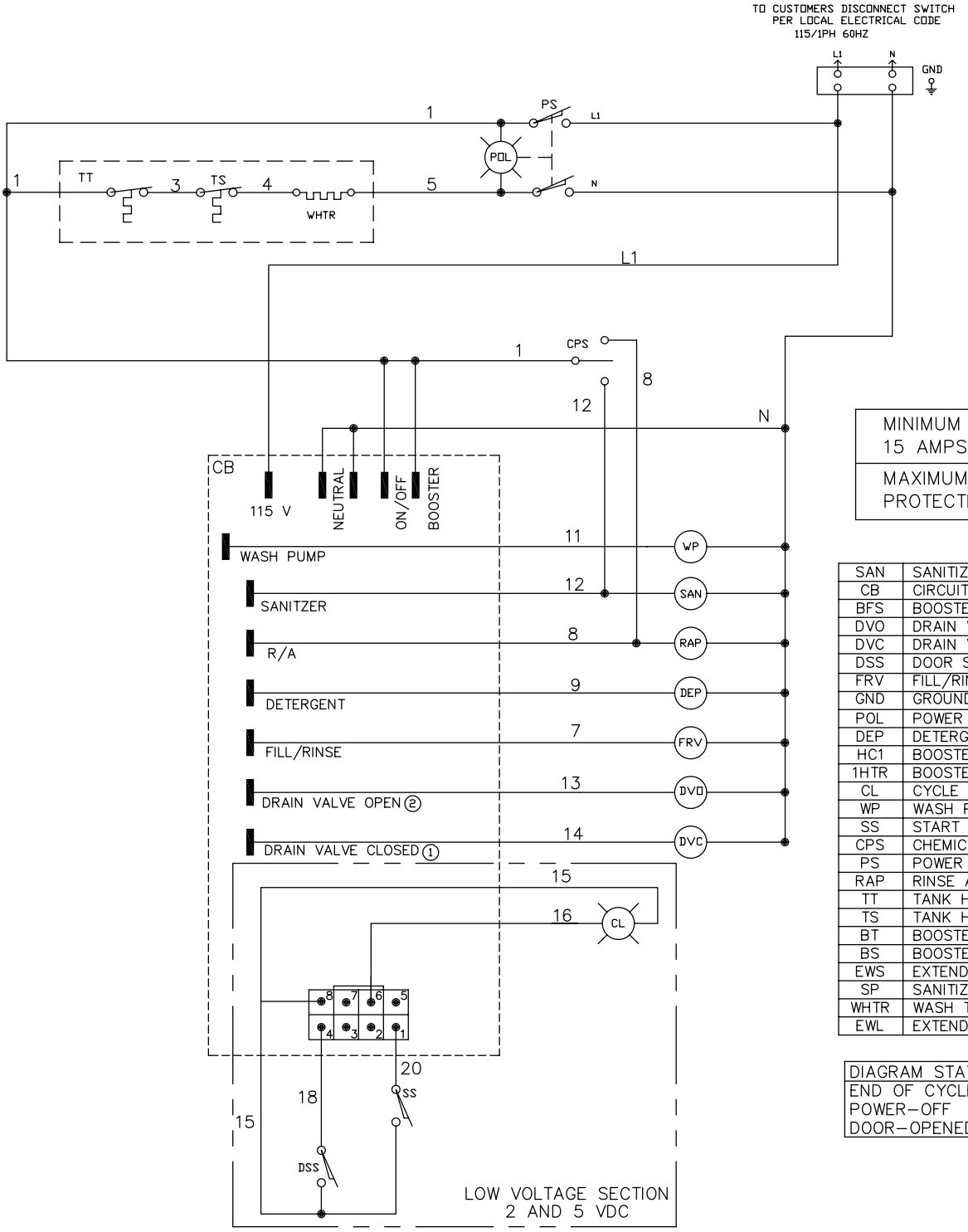

MINIMUM CIRCUIT AMPACITY 15 AMPS
MAXIMUM OVERCURRENT PROTECTION 15 AMPS

SAN	SANITIZER
CB	CIRCUIT BOARD
BFS	BOOSTER FILL SWITCH
DVO	DRAIN VALVE OPEN
DVC	DRAIN VALVE CLOSED
DSS	DOOR SAFETY SWITCH
FRV	FILL/RINSE VALVE
GND	GROUND
POL	POWER ON LIGHT
DEP	DETERGENT PUMP
HC1	BOOSTER CONTACTOR
1HTR	BOOSTER HEATER
CL	CYCLE LIGHT
WP	WASH PUMP
SS	START SWITCH
CPS	CHEMICAL PRIME SWITCH
PS	POWER ON SWITCH
RAP	RINSE AID PUMP
TT	TANK HEAT THERMOSTAT
TS	TANK HEAT SAFETY THERMOSTAT
BT	BOOSTER THERMOSTAT
BS	BOOSTER SAFETY THERMOSTAT
EWS	EXTENDED WASH SWITCH
SP	SANITIZER PUMP
WHTR	WASH TANK HEATER
EWL	EXTENDED WASH LIGHT

DIAGRAM STATE
END OF CYCLE
POWER–OFF
DOOR–OPENED

Low Temperature Undercounter - All S/N's

DATE	NUMBER/REV
20–JUN–06	0512089 REV 2

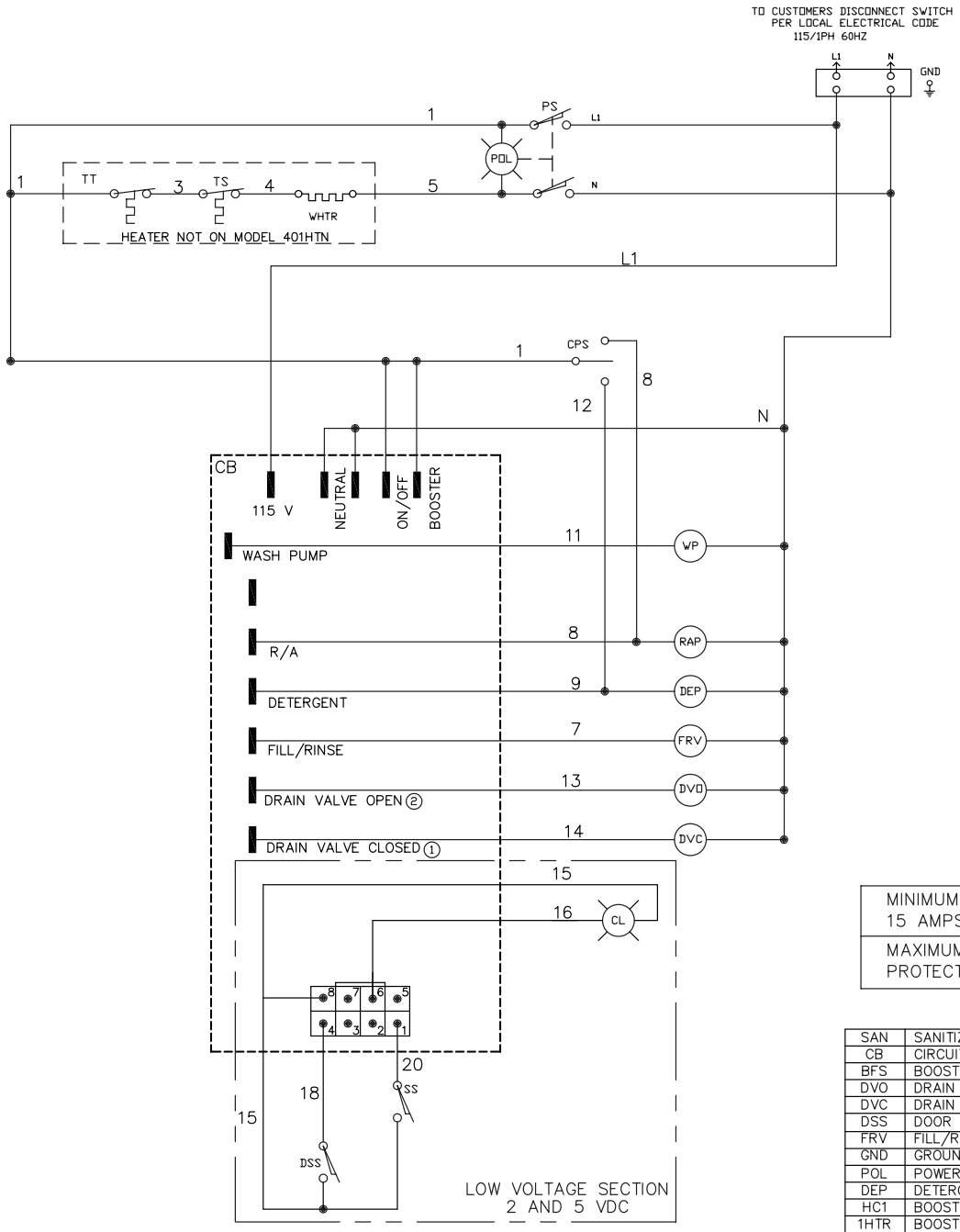

MINIMUM CIRCUIT AMPACITY 15 AMPS
MAXIMUM OVERCURRENT PROTECTION 15 AMPS

SAN	SANITIZER
CB	CIRCUIT BOARD
BFS	BOOSTER FILL SWITCH
DVO	DRAIN VALVE OPEN
DVC	DRAIN VALVE CLOSED
DSS	DOOR SAFETY SWITCH
FRV	FILL/RINSE VALVE
GND	GROUND
POL	POWER ON LIGHT
DEP	DETERGENT PUMP
HC1	BOOSTER CONTACTOR
1HTR	BOOSTER HEATER
CL	CYCLE LIGHT
WP	WASH PUMP
SS	START SWITCH
CPS	CHEMICAL PRIME SWITCH
PS	POWER ON SWITCH
RAP	RINSE AID PUMP
TT	TANK HEAT THERMOSTAT
TS	TANK HEAT SAFETY THERMOSTAT
BT	BOOSTER THERMOSTAT
BS	BOOSTER SAFETY THERMOSTAT
EWS	EXTENDED WASH SWITCH
WHTR	WASH TANK HEATER
EWL	EXTENDED WASH LIGHT

All S/N's
201HTN, 401HTN, 501HTN
High Temperature Dishwasher w/o Built-in Booster

DIAGRAM STATE
END OF CYCLE
POWER-OFF
DOOR-OPENED

DATE	NUMBER/REV
10-OCT-06	0512388 REV 1

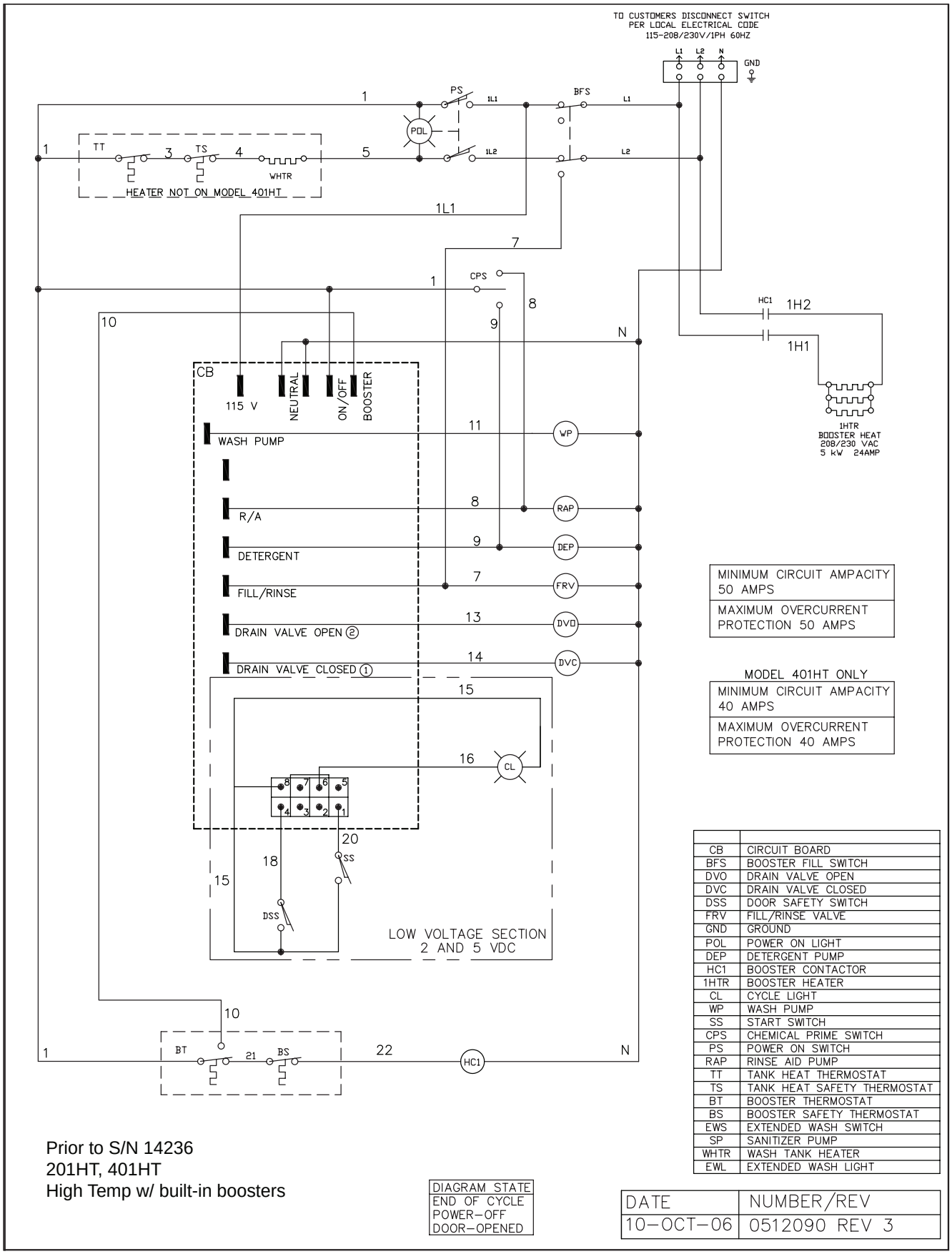

CB	CIRCUIT BOARD
BFS	BOOSTER FILL SWITCH
DVO	DRAIN VALVE OPEN
DVC	DRAIN VALVE CLOSED
DSS	DOOR SAFETY SWITCH
FRV	FILL/RINSE VALVE
GND	GROUND
POL	POWER ON LIGHT
DEP	DETERGENT PUMP
HC1	BOOSTER CONTACTOR
1HTR	BOOSTER HEATER
CL	CYCLE LIGHT
WP	WASH PUMP
SS	START SWITCH
CPS	CHEMICAL PRIME SWITCH
PS	POWER ON SWITCH
RAP	RINSE AID PUMP
TT	TANK HEAT THERMOSTAT
TS	TANK HEAT SAFETY THERMOSTAT
BT	BOOSTER THERMOSTAT
BS	BOOSTER SAFETY THERMOSTAT
EWS	EXTENDED WASH SWITCH
SP	SANITIZER PUMP
WHTR	WASH TANK HEATER
EWL	EXTENDED WASH LIGHT

Prior to S/N 14236
201HT, 401HT
High Temp w/ built-in boosters

DIAGRAM STATE
END OF CYCLE
POWER-OFF
DOOR-OPENED

DATE	NUMBER/REV
10-OCT-06	0512090 REV 3

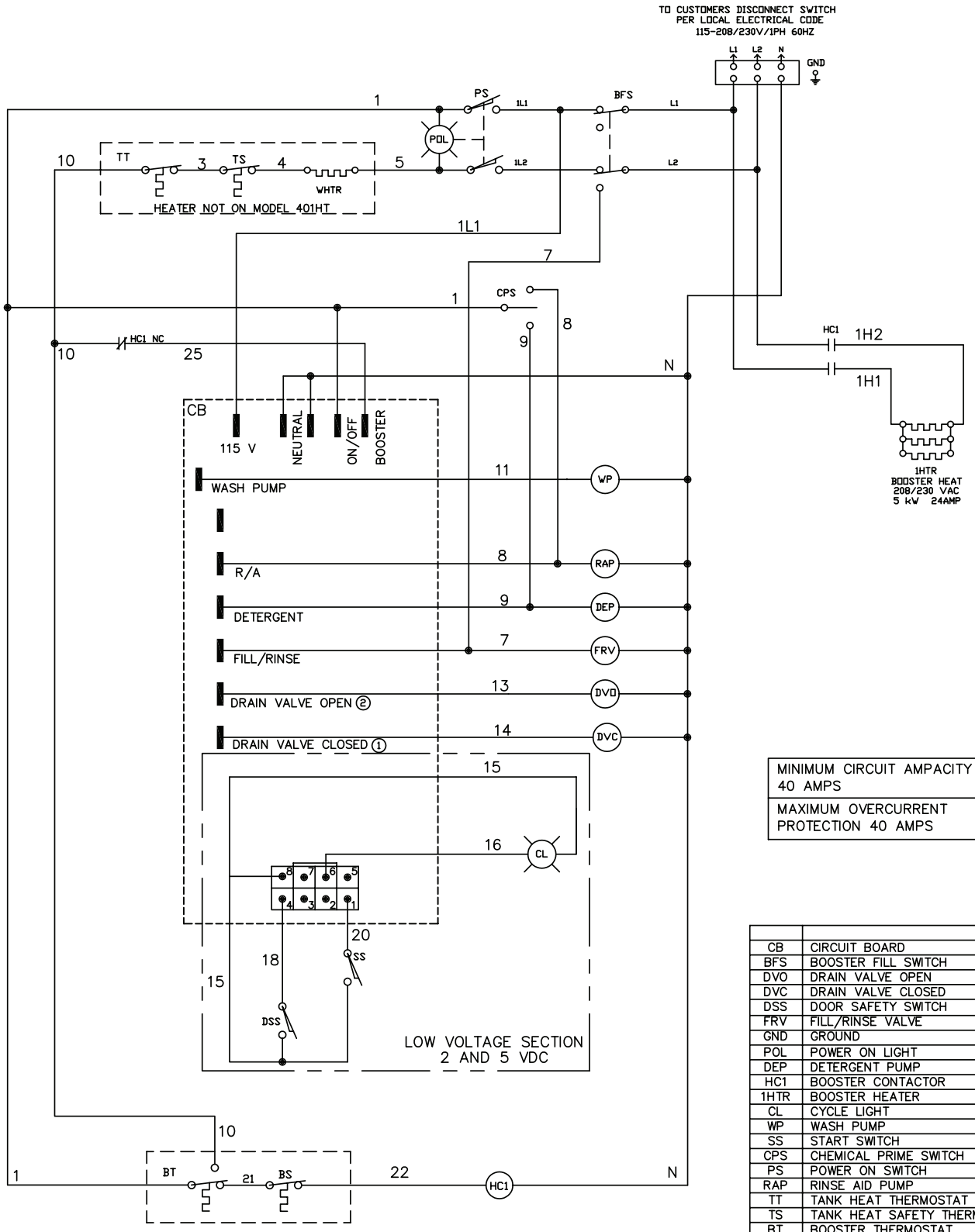

MINIMUM CIRCUIT AMPACITY 40 AMPS
MAXIMUM OVERCURRENT PROTECTION 40 AMPS

CB	CIRCUIT BOARD
BFS	BOOSTER FILL SWITCH
DVO	DRAIN VALVE OPEN
DVC	DRAIN VALVE CLOSED
DSS	DOOR SAFETY SWITCH
FRV	FILL/RINSE VALVE
GND	GROUND
POL	POWER ON LIGHT
DEP	DETERGENT PUMP
HC1	BOOSTER CONTACTOR
1HTR	BOOSTER HEATER
CL	CYCLE LIGHT
WP	WASH PUMP
SS	START SWITCH
CPS	CHEMICAL PRIME SWITCH
PS	POWER ON SWITCH
RAP	RINSE AID PUMP
TT	TANK HEAT THERMOSTAT
TS	TANK HEAT SAFETY THERMOSTAT
BT	BOOSTER THERMOSTAT
BS	BOOSTER SAFETY THERMOSTAT
EWS	EXTENDED WASH SWITCH
SP	SANITIZER PUMP
WHTR	WASH TANK HEATER
EWL	EXTENDED WASH LIGHT

Beginning with S/N W14236 and above
201HT, 401HT High Temperature Dishwasher
with built-in booster.

HIGH TEMP F&D UNDERCOUNTER

DIAGRAM STATE
END OF CYCLE POWER-OFF DOOR-OPENED

DATE	NUMBER/REV
10-MAY-07	0512090 REV 4

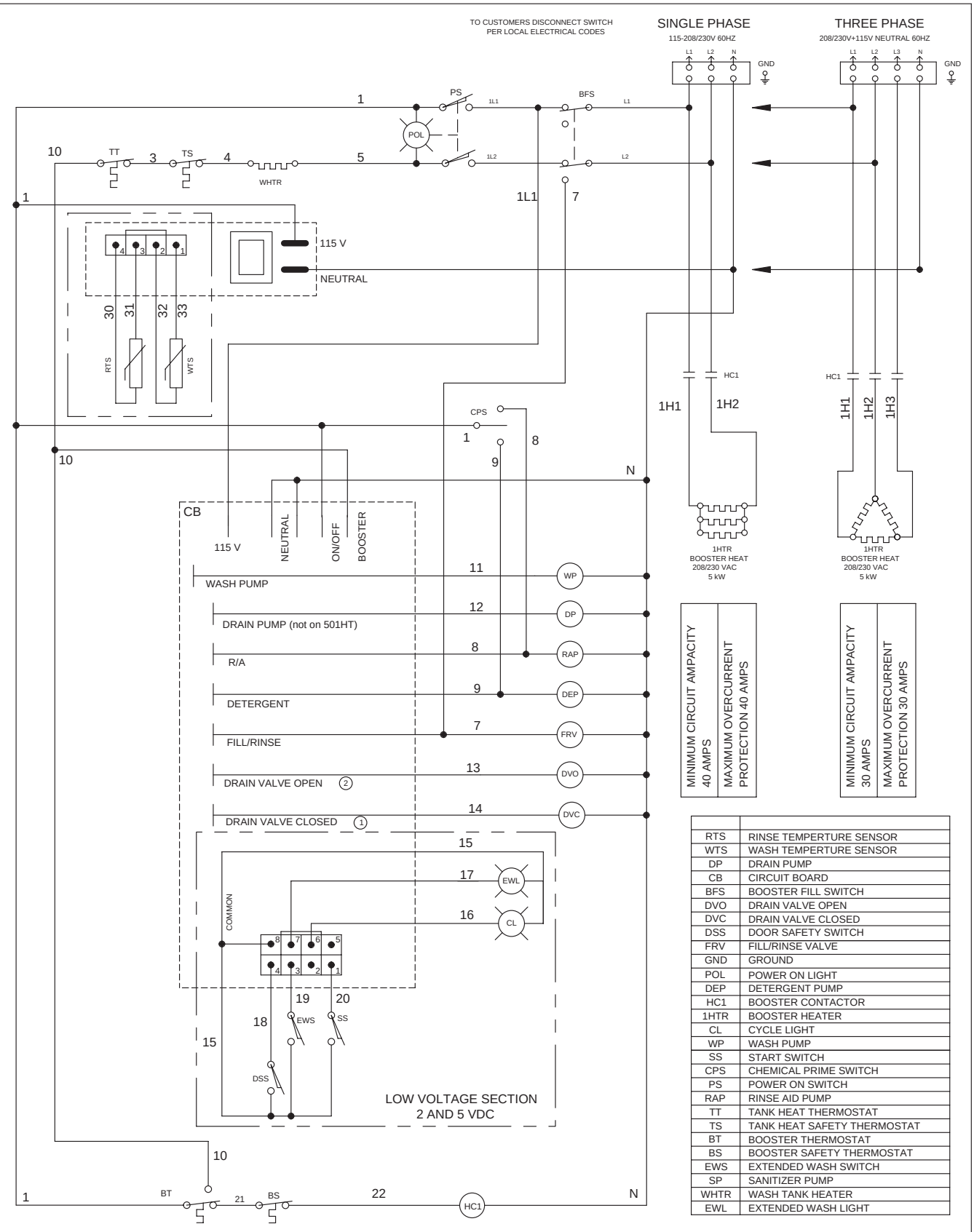

RTS	RINSE TEMPERTURE SENSOR
WTS	WASH TEMPERTURE SENSOR
DP	DRAIN PUMP
CB	CIRCUIT BOARD
BFS	BOOSTER FILL SWITCH
DVO	DRAIN VALVE OPEN
DVC	DRAIN VALVE CLOSED
DSS	DOOR SAFETY SWITCH
FRV	FILL/RINSE VALVE
GND	GROUND
POL	POWER ON LIGHT
DEP	DETERGENT PUMP
HC1	BOOSTER CONTACTOR
1HTR	BOOSTER HEATER
CL	CYCLE LIGHT
WP	WASH PUMP
SS	START SWITCH
CPS	CHEMICAL PRIME SWITCH
PS	POWER ON SWITCH
RAP	RINSE AID PUMP
TT	TANK HEAT THERMOSTAT
TS	TANK HEAT SAFETY THERMOSTAT
BT	BOOSTER THERMOSTAT
BS	BOOSTER SAFETY THERMOSTAT
EWS	EXTENDED WASH SWITCH
SP	SANITIZER PUMP
WHTR	WASH TANK HEATER
EWL	EXTENDED WASH LIGHT

Prior to S/N 14236
501HT High Temperature Digital Display

DIAGRAM STATE
END OF CYCLE
POWER-OFF
DOOR-OPEN

DATE	NUMBER/REV
26-FEB-07	0512092 REV 3

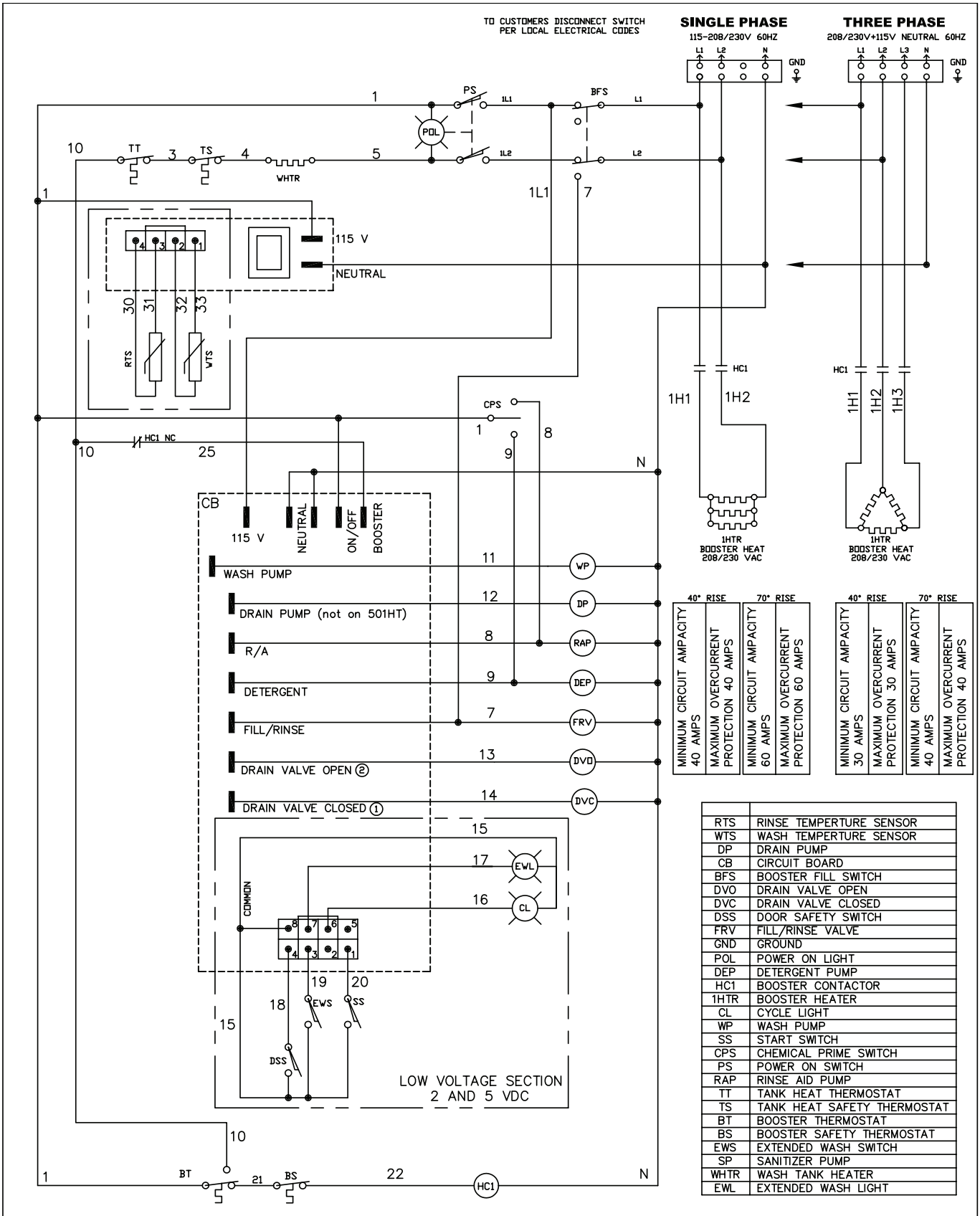

RTS	RINSE TEMPERTURE SENSOR
WTS	WASH TEMPERTURE SENSOR
DP	DRAIN PUMP
CB	CIRCUIT BOARD
BFS	BOOSTER FILL SWITCH
DVO	DRAIN VALVE OPEN
DVC	DRAIN VALVE CLOSED
DSS	DOOR SAFETY SWITCH
FRV	FILL/RINSE VALVE
GND	GROUND
POL	POWER ON LIGHT
DEP	DETERGENT PUMP
HC1	BOOSTER CONTACTOR
1HTR	BOOSTER HEATER
CL	CYCLE LIGHT
WP	WASH PUMP
SS	START SWITCH
CPS	CHEMICAL PRIME SWITCH
PS	POWER ON SWITCH
RAP	RINSE AID PUMP
TT	TANK HEAT THERMOSTAT
TS	TANK HEAT SAFETY THERMOSTAT
BT	BOOSTER THERMOSTAT
BS	BOOSTER SAFETY THERMOSTAT
EWS	EXTENDED WASH SWITCH
SP	SANITIZER PUMP
WHTR	WASH TANK HEATER
EWL	EXTENDED WASH LIGHT

Beginning with S/N 14236 and above
501HT High Temperature Digital Display Undercounter

DIAGRAM STATE
END OF CYCLE
POWER-OFF
DOOR-OPEN

DATE	NUMBER/REV
18-OCT-07	0512092 REV 4

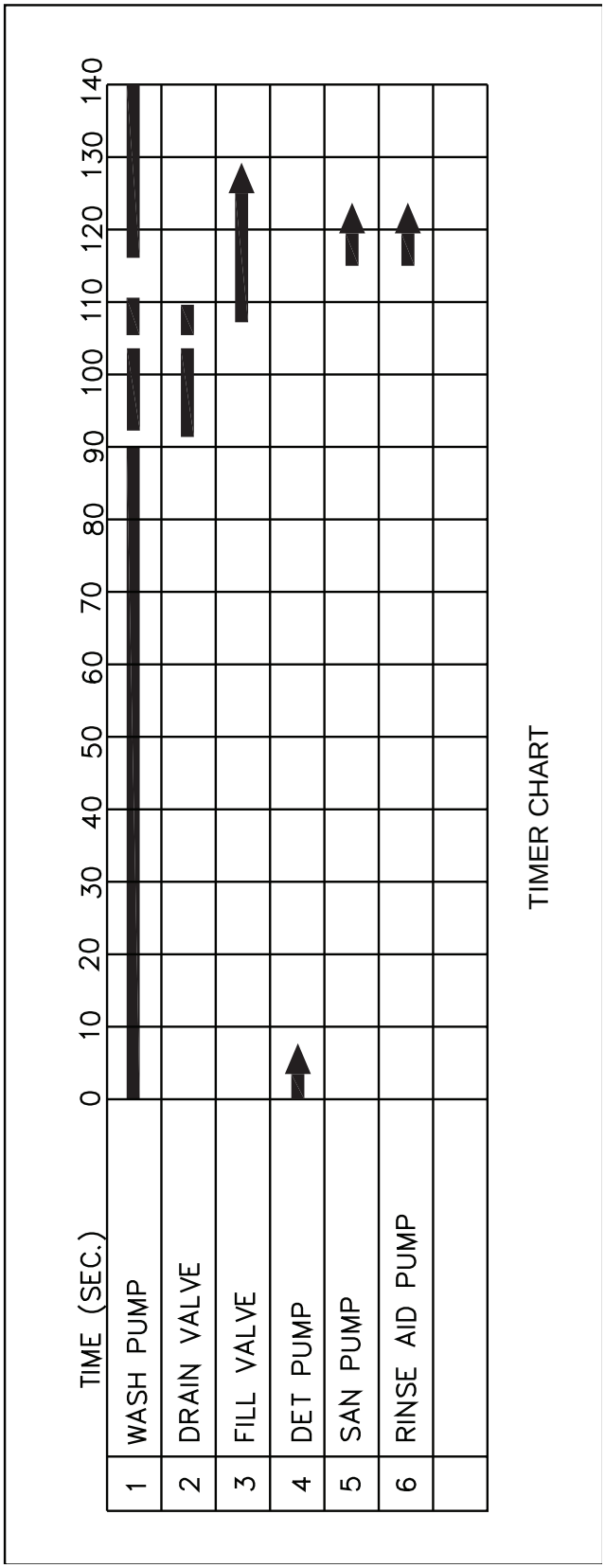
TIME (SEC.)
0
10
20
30
40
50
60
70
80
90
100
110
120
130
140
1 WASH PUMP
2 DRAIN VALVE
3 FILL VALVE
4 DET PUMP
5 SAN PUMP
6 RINSE AID PUMP
TIMER CHART

Basic Service

Illustration	Pg.
Digital Temperature Display Board *(501HT Only)*	*64*
Digital Temperature Display Codes *(501HT Only)*	*65*
Timer Board Selector Switch *(All Models)*	*66*
Timer Board Troubleshooting Guide *(All Models)*	*67*
Timer Board Diagnostic Testing *(S/N W081217467 and above)*	*68*

Champion®
The Dishwashing and Glasswashing Machine Specialists

MOYER DIEBEL®

Service Bulletin
501HTM3, UH200B
April 2008

Part # 0512106 Digital Temperature Display Board

The digital temperature display board does not control temperature, and is not interfaced with the timer board.

- The wash display will update every 10 seconds
- The rinse display updates every 20 seconds if the temperature is below 170°F, and every second if the temperature is above 170°F

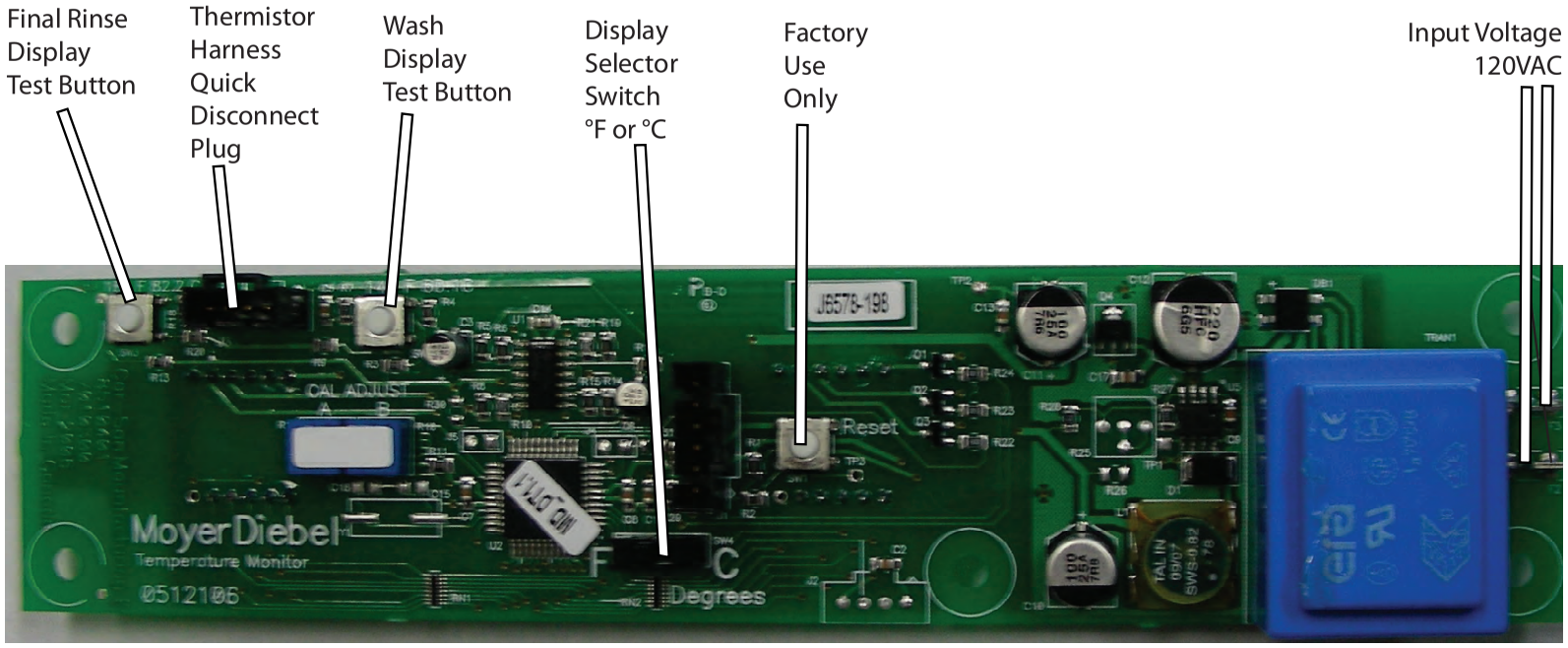

TEST PROCEDURE

1. Remove the thermistor harness. The final rinse and wash displays should both read “E”.
2. Press and hold the final rinse display test button. The **final rinse display** should read **179°F - 180°F**.
3. Press and hold the wash display test button for a **minimum** of **10 seconds**. The **wash display** should read **140°F**.
   Note: Temperature readings while testing are displayed in °F, even if the board is set for °C during the test mode.
4. If both the wash and final rinse displays indicate specified temperatures, the temperature display board is operating properly.

P/N 0512106 DIGITAL TEMPERATURE DISPLAY CODES

DISPLAY CODE	CAUSE
Wash Display	
	Wash temperature is below 100°F
	Wash temperature is above 180°F
	Wash tank has no water and heater is on
	Bad booster thermistor Open or broken wire between thermistor and board Loose connection Wash tank has no water and is extremely hot
Rinse Display	
	Booster temperature is below 100°F
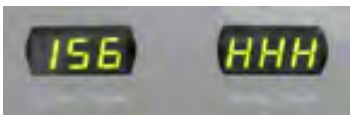	Rinse temperature is above 200°F
	Booster tank has no water and heater is on
	Bad booster thermistor Broken wire between thermistor and board Loose connection Booster tank is dry and extremely hot
Wash and Rinse Display	
	Thermistor quick disconnect plug on back of board is disconnected Booster tank and wash tank are both dry Broken wires on thermistor harness, or both thermistors are unplugged or defective
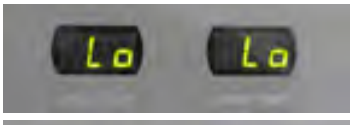	Booster and wash tank temperature below 100°F
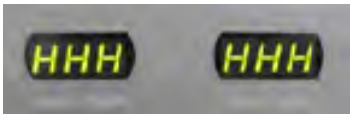	Booster temperature above 200°F and wash tank temperature above 180°F

Timer Connection Diagram

Solid State Timer P/N 0512105

201, 401, 501, UH100, UH170, UH200

January 2009

Champion® MOYER DIEBEL®

The Dishwashing and Glasswashing Machine Specialists

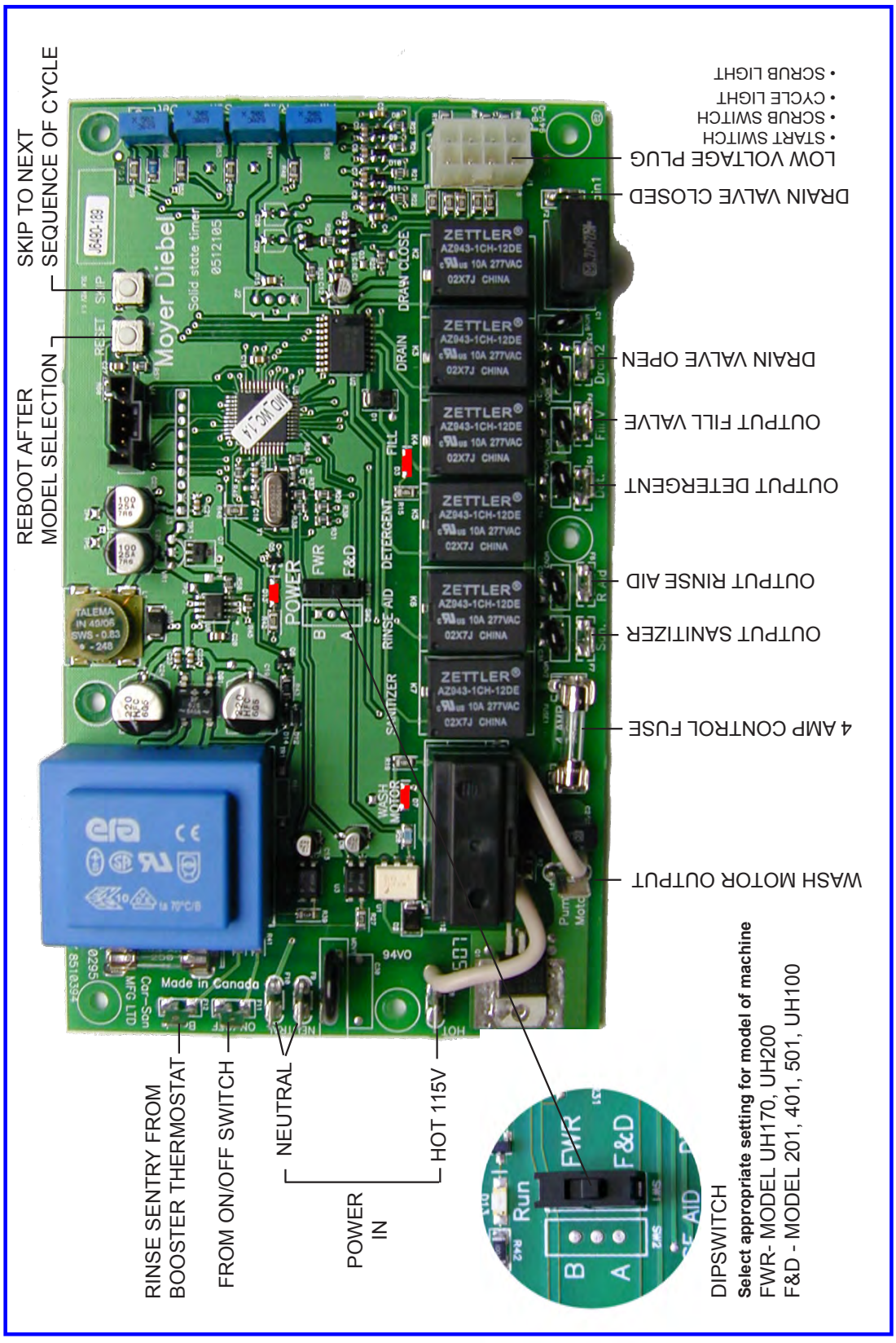

Champion® MOYER DIEBEL
The Dishwashing and Glasswashing Machine Specialists

Service Bulletin

Troubleshooting Timer Board P/N 0512105
201, 401, 501, UH100, UH170, UH200
June 2009

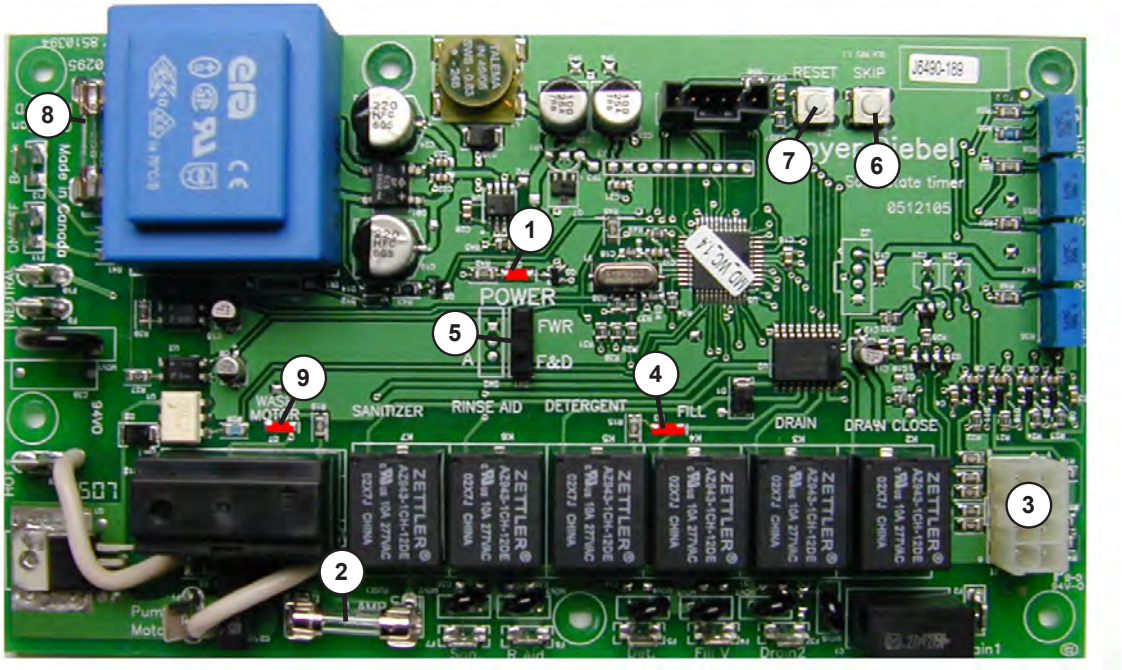

Test/Condition	Indication/Cause	Recomendation/Solution
1. Run LED is lit	Board has power	
Machine is powered up and Run LED is not lit	Possible bad start switch, scrub switch or wiring short (does not apply to S.S. Pizio switch on model 501 or UH200)	Unplug low voltage plug. If Run LED lights up: The start switch or scrub switch failed in the closed position, or there is a wiring short
Machine is powered up and Run LED is not lit after unplugging the low voltage plug		Check voltage
2. Wash pump runs but nothing else works	4 amp board output fuse is blown	Replace the 4 amp fuse. Check for wiring problem
3. Check continuity of the start switch	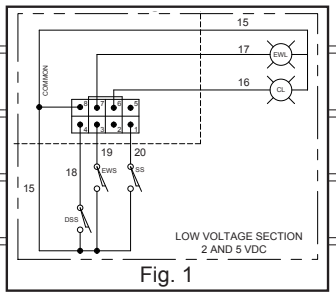	Use plug pin #8, wire #15 as common to plug pin # 1, wire #20 (see Fig.1)
Check continuity of the scrub switch		Use plug pin #8, wire #15 as common to plug pin # 3, wire #19 (see Fig.1)
Check continuity of the door switch		Use plug pin #8, wire #15 as common to plug pin # 4, wire #18 (see Fig.1)
Check continuity of the cycle light		Use a meter with diode setting - to cycle light, plug pin # 6, wire #16
Check continuity of the scrub light		Use a meter with diode setting - to scrub light, plug pin # 7, wire #17
4. Fill LED is lit	Indicates output voltage to fill valve	
5. Select the appropriate setting on the dipswitch for the model of machine the solid state timer will be installed in	*Note: This solid state timer board is used for several different models*	Set dipswitch to **FWR** for model UH170 and UH200 Set dipswitch to **F&D** for model 201, 401, 501, UH100
6. Use the skip switch to force the timer to the next segment of the cycle		Eg: Pressing the skip switch immediately after starting the cycle will make the machine skip the wash cycle, and go straight into the drain cycle
7. Use the reset button to reset the solid state timer board	The reset button will reboot the solid state timer board (much like rebooting your computer)	
8. 0.063 amp internal board supply fuse is blown		Replace the solid state timer board
9. Wash motor LED is lit	Indicates output voltage to the wash motor during wash/rinse cycle only. *LED is not lit during soft start*	
Wash motor LED is not lit, but wash motor runs continuously		Replace the board

Fig. 1

Diagnostic Testing for p/n 0512105 Solid State Timer Board

- effective serial # W081217467 and up

1 Before testing, turn the power switch OFF and allow the machine to complete the drain cycle.

Check incoming voltages

2 Open the door

If the green cycle indicator light blinks, the DOOR SWITCH and CYCLE LIGHT work
Note: This function times out after 10 seconds

Close the door

3 Press and release the START SWITCH

If the green cycle indicator light flashes the start switch works

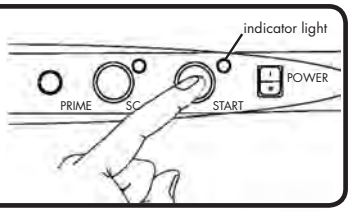

4 Press and release the SCRUB/EXT WASH switch if equipped

If the green indicator light for the scrub switch flashes, the scrub/ext wash switch works

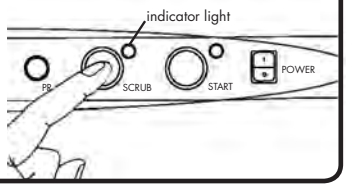

5 To test the timer board and the following components, press and release the start switch 3 times with the door closed

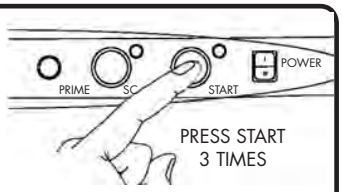

If the components listed below are operating properly, they should run consecutively for a few seconds each

- fill valve
- detergent pump
- rinse-aid pump
- drain valve opens
- drain valve closes
- wash pump
- drain pump or sanitizer pump (if applicable)

If one or more components do not run, see below

CONDITION	POSSIBLE CAUSE/SOLUTION
One of the components in step 5 does not run	Check the component that did not run
The wash pump is the only component that runs	Check the 4 amp fuse on the timer board
The wash pump is the only component that will not run and the 4 amp fuse is good	Check pump motor/See troubleshooting guide
None of the components run in step 5	Check neutral wire/See troubleshooting guide

0512835