ITEM	PART #	DESCRIPTION	LIST	ITEM	PART #	DESCRIPTION	LIST
1	TB-3-01	STANDARD TOP GRATE (SHOWN) 5 X 17	$112.00	12	TB-3-12	PILOT ADJUSTMENT VALVE - SINGLE	$14.00
1	TB-3-01A	FISH GRATE	$70.00	12	TB-3-12A	PILOT ADJUSTMENT VALVE - DOUBLE	$17.00
2	TB-3-02	S/S RADIANT	$50.00	14	TB-3-14	FRONT PANEL (SPECIFY MODEL)	$?
3	TB-3-03	BURNER W/AIR SHUTTER	$73.00	15	TB-3-15	KNOB	$11.00
4	TB-3-04	AIR SHUTTER ONLY	$5.00	17	TB-3-17	ADJUSTABLE LEG	$18.00
5	TB-315-05	RADAINT PAN FOR TB315-C	$97.00	18	TB-3-18	HEAT SHIELD (SPECIFY MODEL)	$?
5	TB-321-05	RADIANT PAN FOR TB321-C	$114.00	19	TB-315-19	DRIP TRAY FOR TB-315-C	$74.00
5	TB-325-05	RADIANT PAN FOR TB325-C	$133.00	19	TB-321-19	DRIP TRAY FOR TB-321-C	$83.00
5	TB-330-05	RADIANT PAN FOR TB330-C	$146.00	19	TB-325-19	DRIP TRAY FOR TB-325-C	$91.00
5	TB-336-05	RADIANT PAN FOR TB336-C	$166.00	19	TB-330-19	DRIP TRAY FOR TB-330-C	$106.00
6	TB-3-06	PILOT BRACKET - DOUBLE	$11.00	19	TB-336-19	DRIP TRAY FOR TB-336-19	$116.00
7	TB-3-07	FRONT CAP (SPECIFY MODEL)	?	20	TB-3-20	NATURAL 3/4" REGULATOR	$36.00
8	TB-3-08	GREASE PAN	$55.00	20	TB-3-20A	L.P. 3/4" REGULATOR	$36.00
9	TB-3-09	PILOT TUBE WITH TIP (DBLE PILOT BRACKET)	$13.00	21	TB-3-21	S/S BAFFLE	$59.00
9	TB-3-09A	PILOT TUBE WITH TIP (SNGL PILOT BRACKET)	$13.00	24	TB-3-24	REMOVABLE BCK SPALSH (SPECIFY MODEL)	?
10	TB-3-10	NATURAL ORIFICE	$4.00	25	TB-3-25	BACK CAP (SPECIFY MODEL)	?
10	TB-3-10A	L.P. ORIFICE	$4.00				
11	TB-3-11	MANUAL VALVE WITH ORIFICE (NAT)	$19.00				
11	TB-3-11A	MANUAL VALVE WITH ORIFICE (LP)	$19.00				

RANKIN DELUX, INC. MODEL TB3 INFRARED TYPE TURBO BROILER

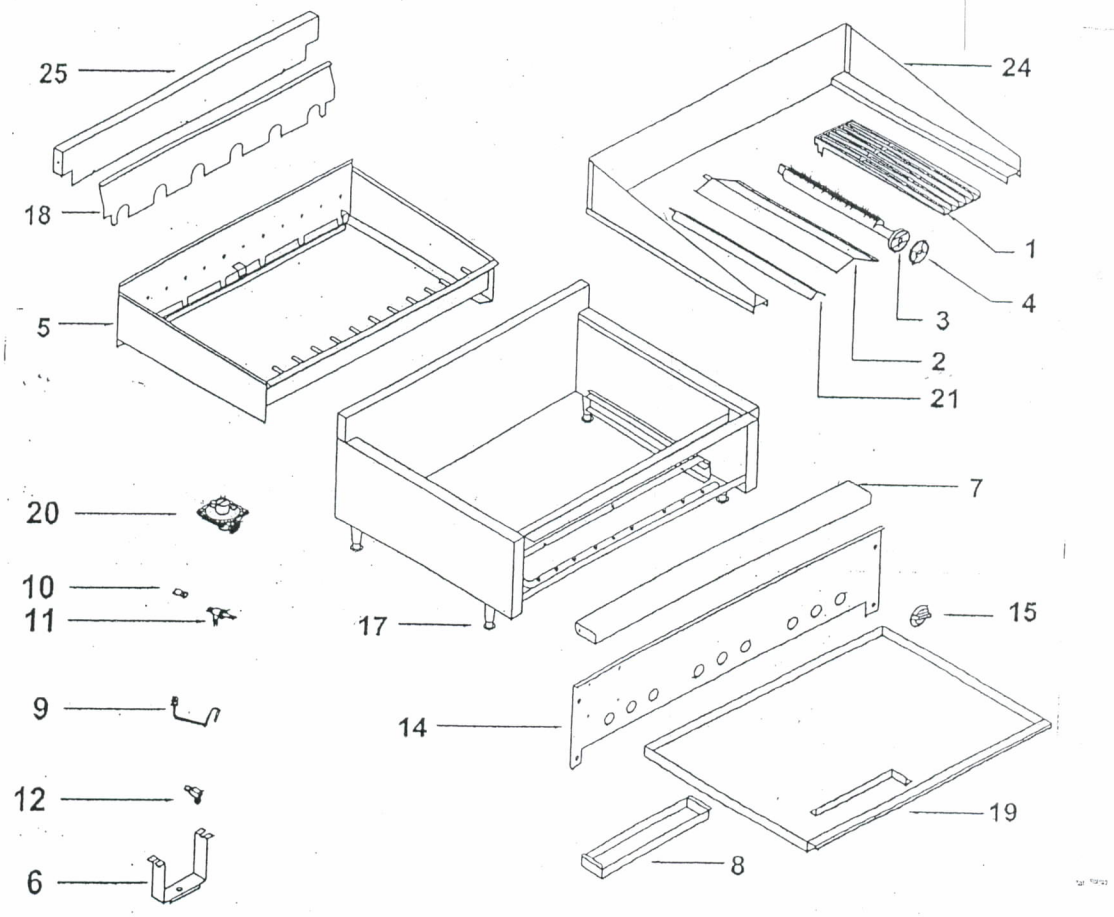

WHEN ORDERING PARTS, PLEASE PROVIDE THE FOLLOWING INFORMATION:
A. MODEL NUMBER C. PART NUMBER
B. SERIAL NUMBER D. TYPE OF GAS

ITEM	PART #	DESCRIPTION	LIST	ITEM	PART #	DESCRIPTION	LIST
1	TB-01	STANDARD TOP GRATE (SHOWN) 5 X 23	$112.00	12	TB-12	PILOT ADJUSTMENT VALVE - DBL	$17.00
1	TB-01A	FISH GRATE	$70.00	12	TB-12A	PILOT ADJUSTMENT VALVE - SNGL	$14.00
2	TB-02	S/S RADIANT	$68.00	13	N/A	N/A	N/A
3	TB-03	BURNER WITH AIR SHUTTER	$67.00	14	TB-14	FRONT PANEL (SPECIFY MODEL)	?
4	TB-04	AIR SHUTTER ONLY	$5.00	15	TB-15	KNOB	$11.00
5	TB-15-05	RADIANT PAN FOR TB815-C	$120.00	16	N/A	N/A	N/A
5	TB-21-05	RADIANT PAN FOR TB821-C	$139.00	17	TB-17	ADJUSTABLE LEG	$18.00
5	TB-25-05	RADIANT PAN FOR TB825-C	$162.00	18	TB-18	HEAT SHIELD (SPECIFY MODEL)	?
5	TB-30-05	RADIANT PAN FOR TB830-C	$179.00	19	TB-15-19	DRIP TRAY FOR TB815-C	$74.00
5	TB-36-05	RADIANT PAN FOR TB836-C	$200.00	19	TB-21-19	DRIP TRAY FOR TB821-C	$83.00
5	TB-41-05	RADIANT PAN FOR TB841-C	$260.00	19	TB-25-19	DRIP TRAY FOR TB825-C	$91.00
5	TB-46-05	RADIANT PAN FOR TB846-C	$286.00	19	TB-30-19	DRIP TRAY FOR TB830-C	$106.00
5	TB-60-05	RADIANT PAN FOR TB860-C	$335.00	19	TB-36-19	DRIP TRAY FOR TB836-C	$116.00
5	TB-72-05	RADIANT PAN FOR TB872-C	$385.00	19	TB-41-19	DRIP TRAY FOR TB841-C	$136.00
5	TB-84-05	RADIANT PAN FOR TB884-C	$452.00	19	TB-46-19	DRIP TRAY FOR TB846-C	$149.00
6	TB-06	PILOT BRACKET - DOUBLE	$8.00	19	TB-60-19	DRIP TRAY FOR TB860-C (2 REQUIRED)	$114.00
6	TB-06A	PILOT BRACKET - SINGLE	$8.00	19	TB-72-19	DRIP TRAY FOR TB872-C (2 REQUIRED)	$125.00
7	TB-07	FRONT CAP * SPECIFY MODEL	?	19	TB-84-19	DRIP TRAY FOR TB884-C (2 REQUIRED)	$136.00
8	TB-08	GREASE PAN	$55.00	20	TB-20	NATURAL 3/4" REGULATOR	$36.00
9	TB-09	PILOT TUBE WITH TIP (DOUBLE PILOT BRACKET)	$13.00	20	TB-20A	L.P. 3/4" REGULATOR	$36.00
9	TB-09A	PILOT TUBE WITH TIP (SINGLE PILOT BRACKET)	$13.00	21	TB-21	S/S BAFFLE	$59.00
10	TB-10	NATURAL ORIFICE	$4.00	22	TB-22	N/A	N/A
10	TB-10A	L.P ORIFICE	$4.00	23	TB-23	N/A	N/A
11	TB-11	MANUAL VALVE WITH ORIFICE (NAT)	$19.00	24	TB-24	REMOVABLE SPLASH *SPECIFY MODEL	?
11	TB-11A	MANUAL VALVE WITH ORIFICE (LP)	$19.00	25	TB-25	BACK CAP *SPECIFY MODEL	?

RANKIN DELUX, INC. MODEL TB8 INFRARED TYPE CHARBROILER

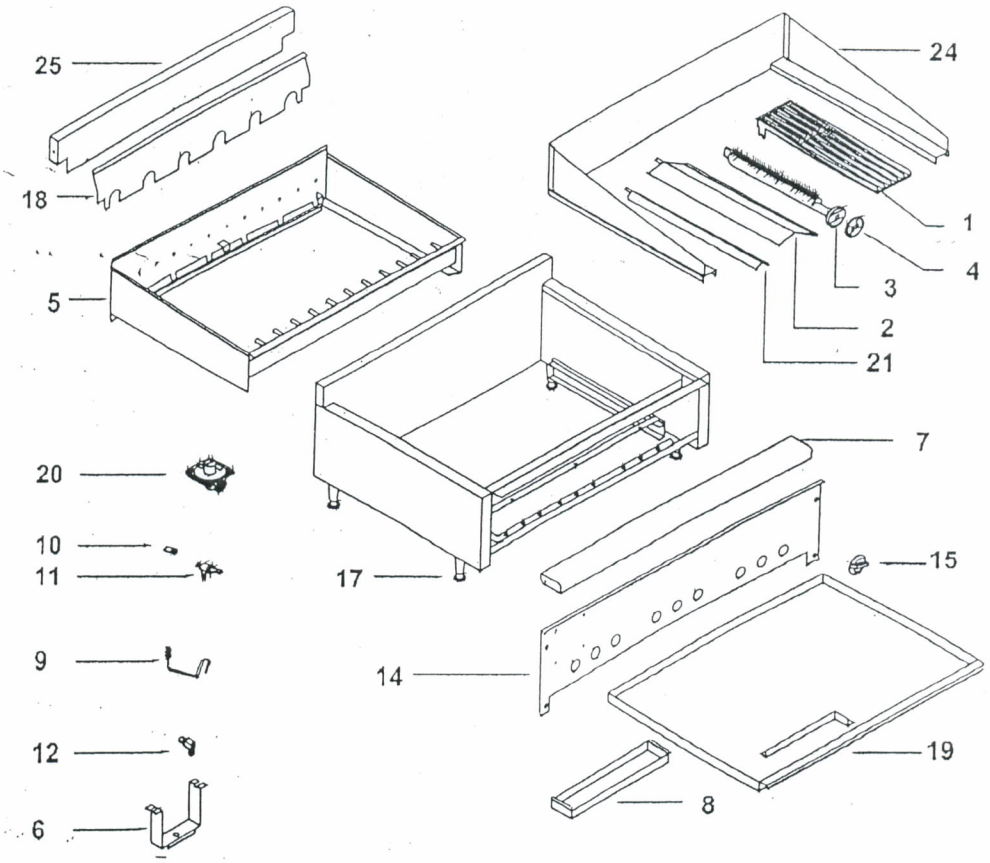

WHEN ORDERING PARTS, PLEASE PROVIDE THE FOLLOWING INFORMATION:

A. MODEL NUMBER
B. SERIAL NUMBER
C. PART NUMBER
D. TYPE OF GAS

PARTS LIST: MODELS TB-(815, 821, 825, 830, 836, 841, 846, 860,872, 884) - C

ITEM	PART #	DESCRIPTION	LIST	ITEMS	PART #	DESCRIPTION	LIST
1	DRB-01	STANDARD TOP GRATE (SHOEWN) 5 X 17)	$112.00	10	DRB-10	NATURAL ORIFICE	$4.00
1	DRB-01A	FISH GRATE	$70.00	10	DRB-10A	L.P. ORIFICE	$4.00
2	DRB-02	CAST IRON RADIANT	$55.00	11	DRB-11	MANUAL VALVE WITH ORIFICE (NAT)	$19.00
3	DRB- 03	BURNER WITH AIR SHUTTER	$73.00	11	DRB-11A	MANUAL VALVE WITH ORIFICE (LP)	$19.00
4	DRB-04	AIR SHUTTER	$5.00	12	DRB-12	PILOT ADJUSTMENT VALVE - SINGLE	$14.00
5	DRB-15-05	RADIANT PAN FOR DRB-15-C	$116.00	12	DRB-12A	PILOT ADJUSTMENT VALVE - DOUBLE	$17.00
5	DRB-21-05	RADIANT PAN FOR DRB-21-C	$136.00	14	DRB-14*	FRONT PANEL (* SPECIFY MODEL)	?
5	DRB-25-05	RADIANT PAN FOR DRB-25-C	$156.00	15	DRB-15	KNOB	$11.00
5	DRB-30-05	RADIANT PAN FOR DRB-30-C	$175.00	17	DRB-17	ADJSUTABLE LEG	$17.00
5	DRB-36-05	RADIANT PAN FOR DRB-36-C	$199.00	19	DRB-15-19	DRIP TRAY FOR DRB-15-C	$74.00
6	DRB-06	PILOT BRACKET - SINGLE	$8.00	19	DRB-21-19	DRIP TRAY FOR DRB-21-C	$83.00
6	DRB-06A	PILOT BRACKET - DOUBLE	$8.00	19	DRB-25-19	DRIP TRAY FOR DRB-25-C	$91.00
7	DRB-07*	FRONT CAP * SPECIFY MODEL	?	19	DRB-30-19	DRIP TRAY FOR DRB-30-C	$106.00
8	DRB-08	GREASE PAN	$55.00	19	DRB-36-19	DRIP TRAY FOR DRB36-C	$116.00
9	DRB-09	PILOT TUBE WITH TIP (STANDARD SHOWN)	$13.00	20	DRB-20	NATURAL 3/4" REGULATOR	$36.00
9	DRB-09A	PILOT TUBE WITH TIP (FOR SINGLE PILOT VALVE)	$13.00	20	DRB-20A	L.P. 3/4" REGULATOR	$36.00
				24	DRB-24	BACK CAP * SPECIFY MODEL	?

RANKIN DELUX, INC. MODEL DRB RADIANT TYPE CHARBROILER

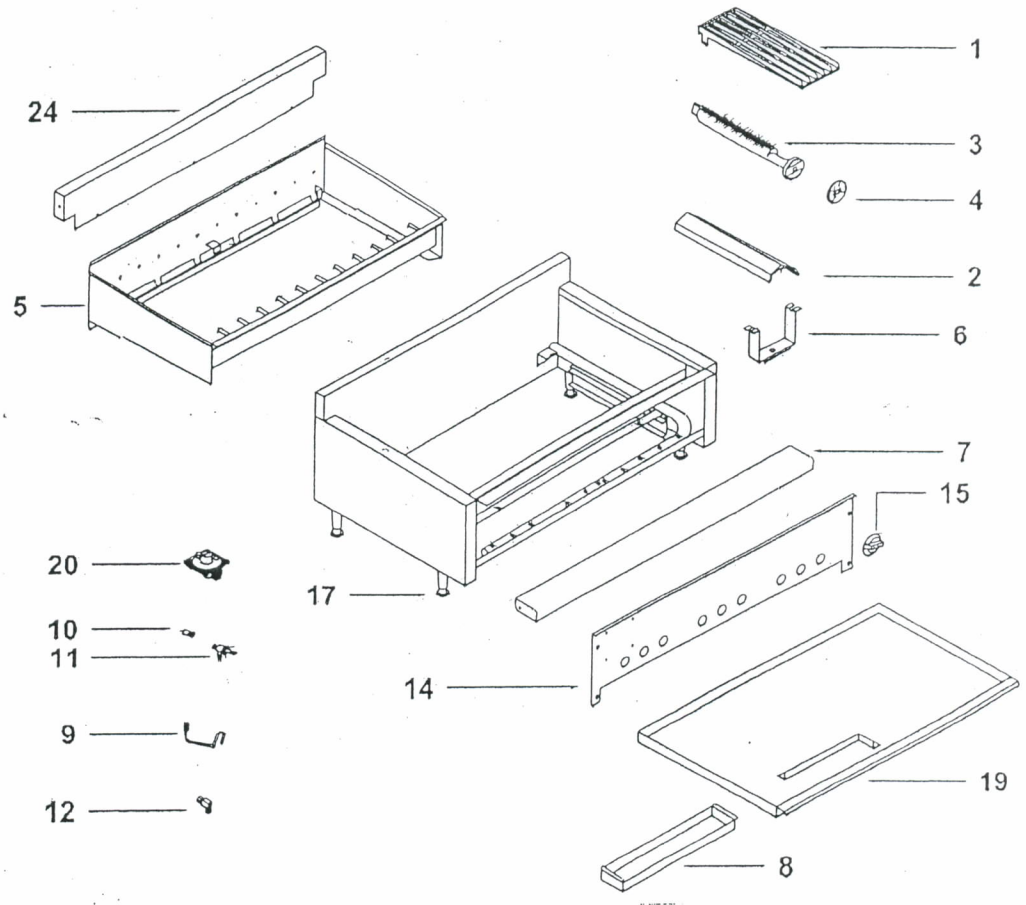

WHEN ORDERING PARTS, PLEASE PROVIDE THE FOLLOWING INFORMATION:

A. MODEL NUMBER
B. SERIAL NUMBER
C. PART NUMBER
D. TYPE OF GAS

ITEM	PART #	DESCRIPTION	LIST	ITEM	PART #	DESCRIPTION	LIST
1	RB-01	STANDARD TOP GRATE (SHOWN 5 X 23)	$112.00	11	RB-11	BURNER VALVE WITH ORIFICE (NAT)	$19.00
1	RB-01A	FISH GRATE	$70.00	11	RB-11A	BURNER VALVE WITH ORIFICE (LP)	$19.00
2	RB-02	CAST IRON RADIANT	$55.00	12	RB-12	PILOT ADJUSTMENT VALVE - DOUBLE	$19.00
3	RB-08	BURNER WITH AIR SHUTTER	$73.00	12	RB-12A	PILOT ADJUSTMENT VALVE - SINGLE	$17.00
4	RB-04	AIR SHUTTER ONLY	$5.00	14	RB-14*	FRONT PANEL (* SPECIFY MODEL)	?
5	RB-15-05	RADIANT PAN FOR RB-815-C	$130.00	15	RB-15	KNOB	$11.00
5	RB-21-05	RADIANT PAN FOR RB-821-C	$152.00	17	RB-17	ADJUSTABLE LEG	$17.00
5	RB-25-05	RADIANT PAN FOR RB-825-C	$175.00	19	RB-15-19	DRIP TRAY FOR RB-815-C	$78.00
5	RB-30-05	RADIANT PAN FOR RB-830-C	$194.00	19	RB-21-19	DRIP TRAY FOR RB-821-C	$91.00
5	RB-36-05	RADIANT PAN FOR RB-836-C	$218.00	19	RB-25-19	DRIP TRAY FOR RB-825-C	$97.00
5	RB-41-05	RADIANT PAN FOR RB-841-C	$238.00	19	RB-30-19	DRIP TRAY FOR RB-830-C	$114.00
5	RB-46-05	RADIANT PAN FOR RB-846-C	$258.00	19	RB-36-19	DRIP TRAY FOR RB-836-C	$125.00
5	RB-60-05	RADIANT PAN FOR RB-860-C	$305.00	19	RB-41-19	DRIP TRAY FOR RB-841-C	$136.00
5	RB-72-05	RADIANT PAN FOR RB-872-C	$350.00	19	RB-46-19	DRIP TRAY FOR RB-846-C	$149.00
5	RB-84-05	RADIANT PAN FOR RB-884-C	$408	19	RB-60-19	DRIP TRAY FOR RB-860-C	$114.00
6	RB-06	PILOT BRACKET - SINGLE	$8	19	RB-72-19	DRIP TRAY FOR RB-872-C	$125.00
6	RB-06A	PILOT BRACKET - DOUBLE	$8.00	19	RB-84-19	DRIP TRAY FOR RB-884-C	$136.00
7	RB-07*	FRONT CAP (* SPECIFY MODEL)	?	20	RB-20	NATURAL 3/4" REGULATOR	$36.00
8	RB-08	GREASE PAN	$55.00	20	RB-20A	L.P. 3/4" REGULATOR	$36.00
9	RB-09	PILOT TUBE WITH TIP FOR DOUBLE	$13.00	24	RB-24	BACK CAP (SPECIFY MODEL)	?
9	RB-09A	PILOT TUBE WITH TIP FOR SINGLE	$13.00				
10	RB-10	NATURAL ORIFICE	$4.00				
10	RB-10A	L.P. ORIFICE	$4.00				

RANKIN DELUX, INC. MODEL RB8 RADIANT TYPE CHARBROILER

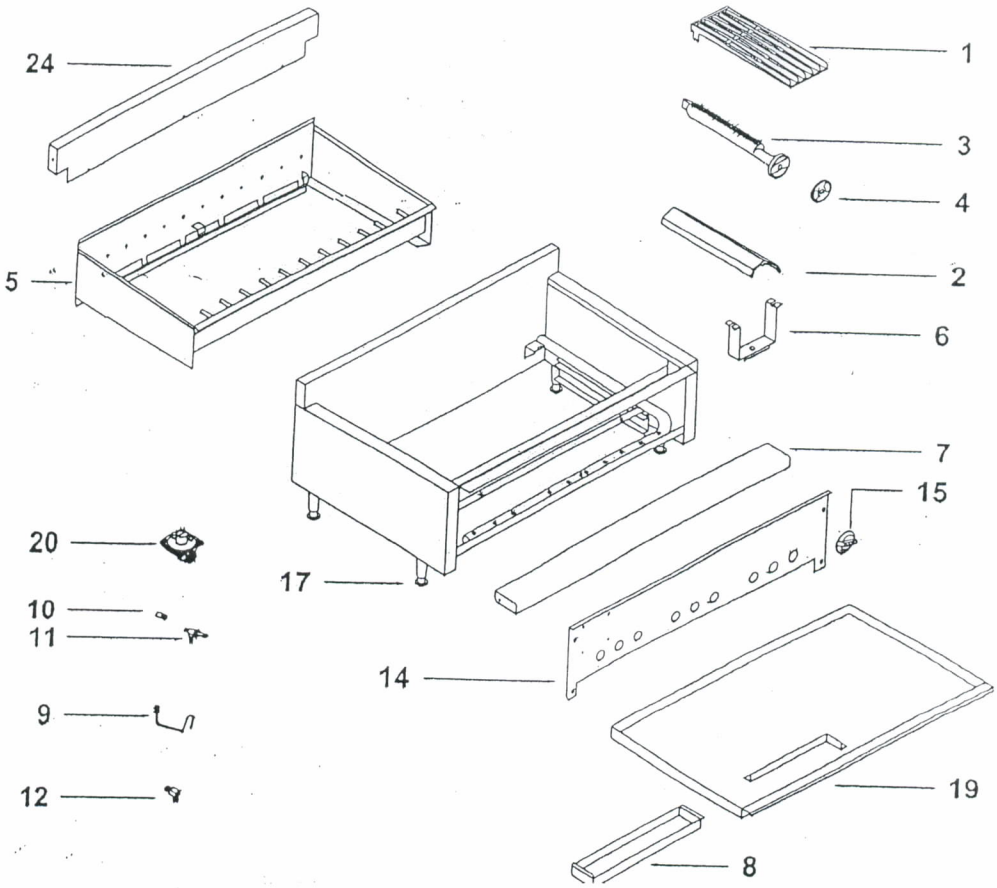

WHEN ORDERING PARTS, PLEASE PROVIDE THE FOLLOWING INFORMATION:

A. MODEL NUMBER C. PART NUMBER

B. SERIAL NUMBER D. TYPE OF GAS

PARTS LIST: MODELS RB8 - (15, 21, 25, 30, 36, 41, 46, 60, 72, 84) - C

ITEM	PART #	DECRIPTION	LIST	ITEM	PART #	DESCRIPTION	LIST
1	RDLR-01	TOP GRATE 5 X 21	$57.00	9	RDLR-09	ORIFICE ONLY, NAT	$4.00
1	RDLR-01A	TOP GRATE 6 X 21 (FOR 1223 ONLY)	$64.00	9	RDLR-09A	ORIFICE ONLY, LP	$4.00
2	RDLR-02	BOTTOM GRATE 8 X 15	$48.00	10	RDLR-10	BURNER VALVE W/ORF, NAT	$19.00
2	RDLR-02A	BOTTOM GRATE 3 X 15	$25.00	10	RDLR-10A	BURNER VALVE W/ORF,LP	$19.00
3	RDLR-12-03	RADIANT PAN FOR 1223-C	$66.00	11	RDLR-11	FRONT PANEL SPECIFY MODEL	?
3	RDLR-21-03	RADIANT PAN FOR 2123-C	$94.00	12	RDLR-12	VALVE KNOB	$8.00
3	RDLR-32-03	RADIANT PAN FOR 3223-C	$116.00	13	RDLR-13	PILOT TUBE W/TIP	$8.00
3	RDLR-42-03	RADIANT PAN FOR 4223-C	$152.00	14	RDLR-14	ADJUSTABLE LEG	$19.00
3	RDLR-52-03	RADIANT PAN FOR 5223-C	$184.00	16	RDLR-12-16	DRIP TRAY FOR 1223-C	$74.00
3	RDLR-62-03	RADIANT PAN FOR 6223-C	$230.00	16	RDLR-21-16	DRIP TRAY FOR 2123-C	$94.00
3	RDLR-72-03	RADIANT PAN FOR 7223-C	$269.00	16	RDLR-32-16	DRIP TRAY FOR 3223-C	$114.00
4	RDLR-04	BURNER W/AIR SHUTTER & S/S PORT PROTECTORS	$94.00	16	RDLR-42-16	DRIP TRAY FOR 4223-C	$113.00
5	RDLR-05	AIR SHUTTER ONLY	$5.00	16	RDLR-52-16	DRIP TRAY FOR 5223-C	$152.00
6	RDLR-06A	REGULATOR 1/2" FOR 1223,2123 NAT	$36.00	16	RDLR-62-16	DRIP TRAY FOR 6223-C	$172.00
6	RDLR-06B	REGULATOR 1/2" FOR 1223,2123 L.P	$36.00	16	RDLR-72-16	DRIP TRAY FOR 7223-C	$199.00
6	RDLR-06C	REGULATOR 3/4" ALL OTHER, NAT	$36.00	17	RDLR-17	FREASE PAN	$71.00
6	RDLR-06D	REGULATOR 3/4" ALL OTHER, L.P	$36.00	18	RDLR-18	S/S PORT PROTECTORS / PER BURNER	$48.00
8	RDLR-08	PILOT ADJUSTMENT VALVE, SINGLE	$14.00	19	RDLR-19	S/S BACK SPLASH SPECIFY MODEL	?
8	RDLR-08A	PILOT ADJUSTMENT VALVE, DOUBLE	$17.00	20	RDLR-20	HEAT SHIELD	?

RANKIN DELUX, INC. MODEL 2300 LAVA ROCK TYPE CHARBROILER

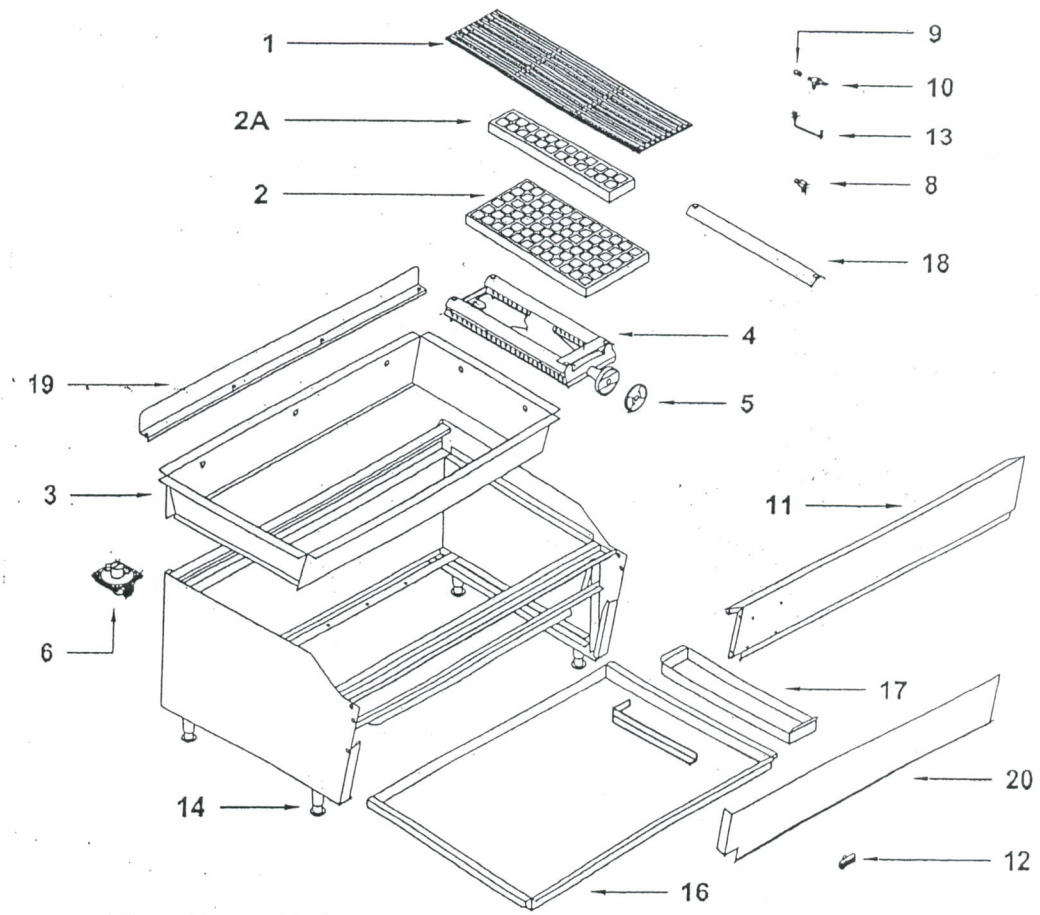

WHEN ORDERING PARTS, PLEASE PROVIDE THE FOLLOWING INFORMATION:

A. MODEL NUMBER
B. SERIAL NUMBER
C. PART NUMBER
D. TYPE OF GAS

ITEM	PART #	DESCRPTION	LIST	ITEM	PART #	DESCRIPTION	LIST
1	GB-01	GRIDDLE PLATE SPECIFY MODEL	?	13	GB-13	BURNER W/ SHUTTER	$36.00
2	GB-24-02	WIRE MESH GB-24	$162.00	14	GB-14	AIR SHUTTER ONLY	$5.00
2	GB-36-02	WIRE MESH GB-36	$188.00	15	GN-15	HEAT SHIELD *SPECIFY MODEL	?
2	GB-48-02	WIRE MESH GB-48	$202.00	16	GB-16	FRONT PANEL *SPECIFY MODEL	?
5	GB-05	LIGHTER ADJUSTMENT VALVE	$17.00	17	GB-24-17	RACK GB-24	$125.00
6	GB-06	BURNER ORIFICE ONLY, NAT	$4.00	17	GB-36-17	RACK GB-36	$173.00
6	GB-06A	BURNER ORIFICE ONLY, LP	$4.00	17	GB-48-17	RACK GB-48	$259.00
7	GB-07	BURNER VALVE W/ORIFICE, SPEC GAS	$19.00	18	GB-24-18	S/S DRIP TRAY GB-24	$218.00
9	GB-09	REGULATOR NATURAL GAS	$19.00	18	GB-36-18	S/S DRIP TRAY GB-36	$305.00
9A	GB-09A	REGULATOR LP GAS	$36.00	18	GB-48-18	S/S DRIP TRAY GB-48	$385.00
10	GB-10	VALVE KNOB	$11.00	20	GB-20	ADJUSTABLE LEG	$19.00
11	GB-11	GREASE PAN S/S	$125.00				
12	GB-24-12	LIGHTER TUBE GB-24	$30.00				
12	GB-36-12	LIGHTER TUBE GB-36	$62.00				
12	GB-48-12	LIGHTER TUBE GB-48	$73.00				

RANKIN DELUX, INC. MODEL GB GRIDDLE OVER FIRED BROILER

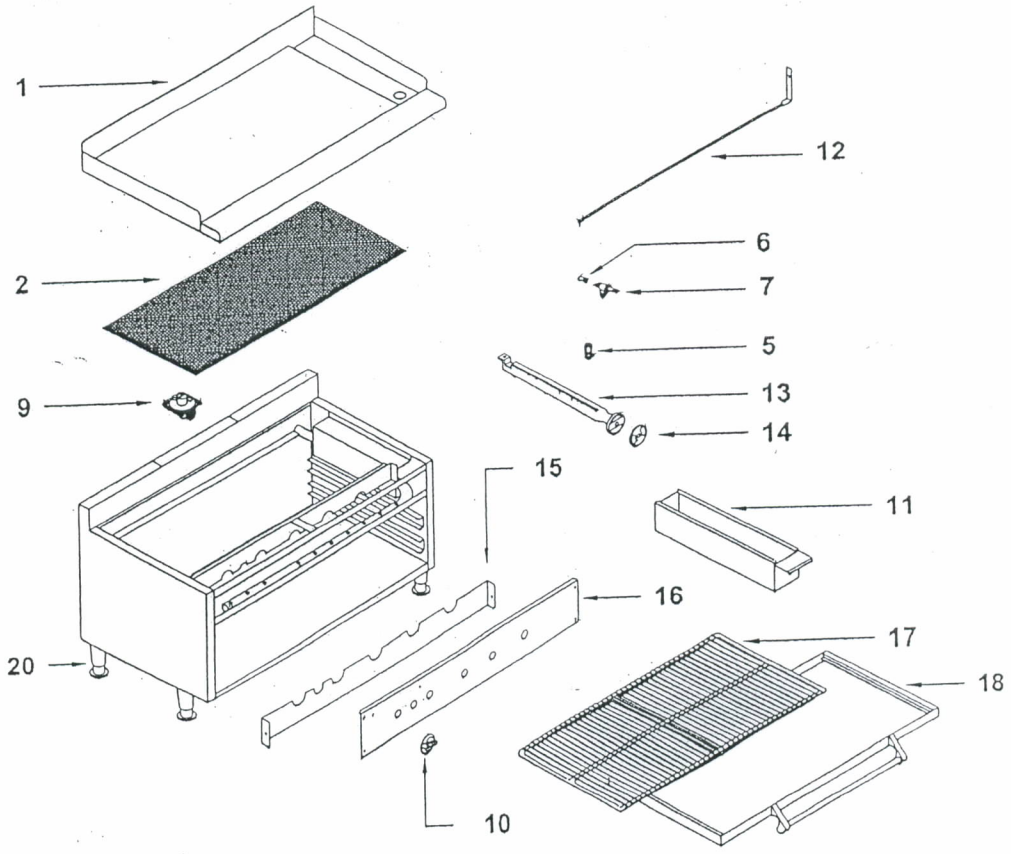

WHEN ORDERING PARTS, PLEASE PROVIDE THE FOLLOWING INFORMATION:

A. MODEL NUMBER
B. SERIAL NUMBER
C. PART NUMBER
D. TYPE OF GAS

ITEM	PART NUMBER	DESCRIPTION	LIST	ITEM	PART NUMBER	DESCRIPTION	LIST
1	CB-01	BURNER 6 1/4 X 22	$147.00	10	CB-10	TOP GRATE	$682.00
2	CB-02	AIR SHUTTER	$5.00	11	CB-11	BOTTOM GRATE 4 X 20	$43.00
3	CB-03	FRONT PANEL	$227.00	12	CB-12	FIREBOX (RADIANT PAN)	$233.00
4	CB-04	REGULATOR / NAT	$36.00	13	CB-13	PILOT TUBE W/TIP	$11.00
4	CB-04A	REGULATOR / LP	$36.00	14	CB-14	FRONT DEFLECTOER	$30.00
6	CB-06	ORIFICE, NAT	$4.00	16	CB-16	DRIP TRAY	$233.00
6	CB-06A	ORIFICE, LP	$4.00	17	CB-17	LEG W/ BULLET FOOT	$8.00
7	DB-07	BURNER VALVE W/ORIFICE	$19.00	19	CB-19	DRIP TRAY	$233.00
8	CB-08	VALVE KNOB	$8.00	20	CB-20	ADJUSTABLE LEG	$19.00
9	CB-09	PILOT ADJUSTMENT VALVE	$17.00				

RANKIN-DELUX, INC. MODEL CB CERAMIC TYPE CHAR BROILER

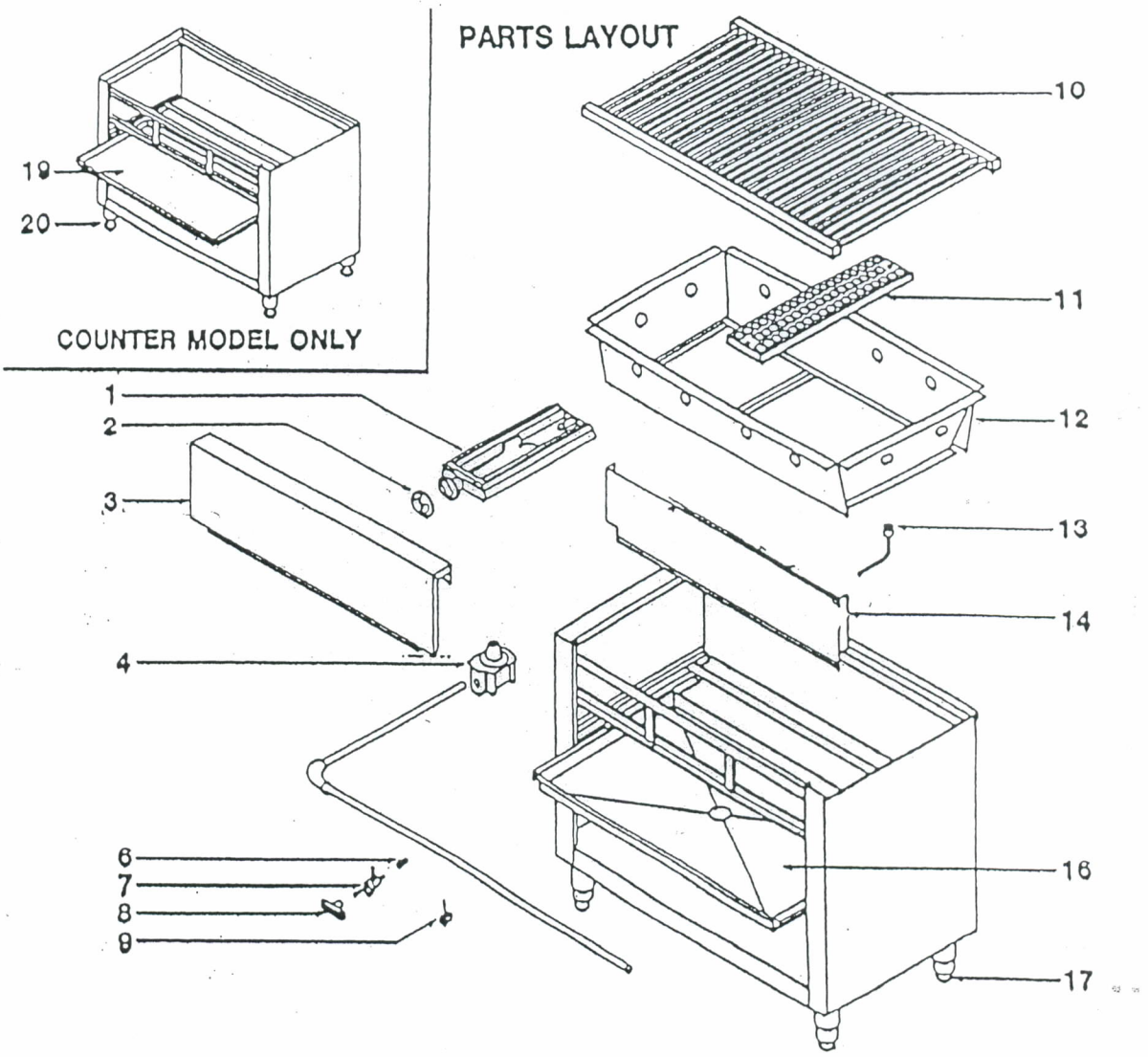

WHEN ORDERING PARTS PLEASE PROVIDE THE FOLLOWING INFORMATION:

A. MODEL NUMBER
B. SERIAL NUMBER
C. PART NUMBER
D. TYPE OF GAS

ITEM	PART #	DESCRIPTION	LIST	ITEM	PART #	DESCRIPTION	LIST
1	RDGM-18-01	BACK PANEL SPECIFY MODEL	?	9	RDGM-18-09	GRIDDLE PLATE ASSY, SPECIFY MODEL	?
3	RDGM-18-03	PILOT TUBE W/TIP FOR DBL ADJ VALVE	$16.00	10	RDGM-18-10	BURNER W/AIR SHUTTER	$82.00
3	RDGM-18-03A	PILOT TUBE W/TIP FOR SINGLE ADJ VALVE	$13.00	11	RDGM-18-11	AIR SHUTTER ONLY	$5.00
5	RDGM-18-05	ADJUSTABLE LEG	$19.00	12	RDGM-18-12	REGULATOR, NAT	$36.00
6	RDGM-18-06	GREASE PAN	$66.00	12	RDGM-18-12A	REGULATOR, LP	$36.00
7	RDGM-18-07	ORIFICE ONLY, NAT	$4.00	14	RDGM-18-14	PILOT ADJUSTMENT VALVE, DOUBLE	#17.00
7	RDGM-18-07A	ORIFICE ONLY, LP	$4.00	14	RDGM-18-14A	PILOT ADJUSTMENT VALVE, SINGLE	$14.00
8	RDGM-18-08	BURNER VALVE W/ORIFICE, NAT	$19.00	15	RDGM-18-15	FRONT PANEL - SPECIFY MODEL	?
8	RDGM-18-08A	BURNER VALVE W/ORIFICE, LO	$19.00	16	RDGM-18-16	VALVE KNOB	$11.00

RANKIN DELUX, INC. MODEL RDGM - 1800 MANUAL CONTROL GRIDDLE

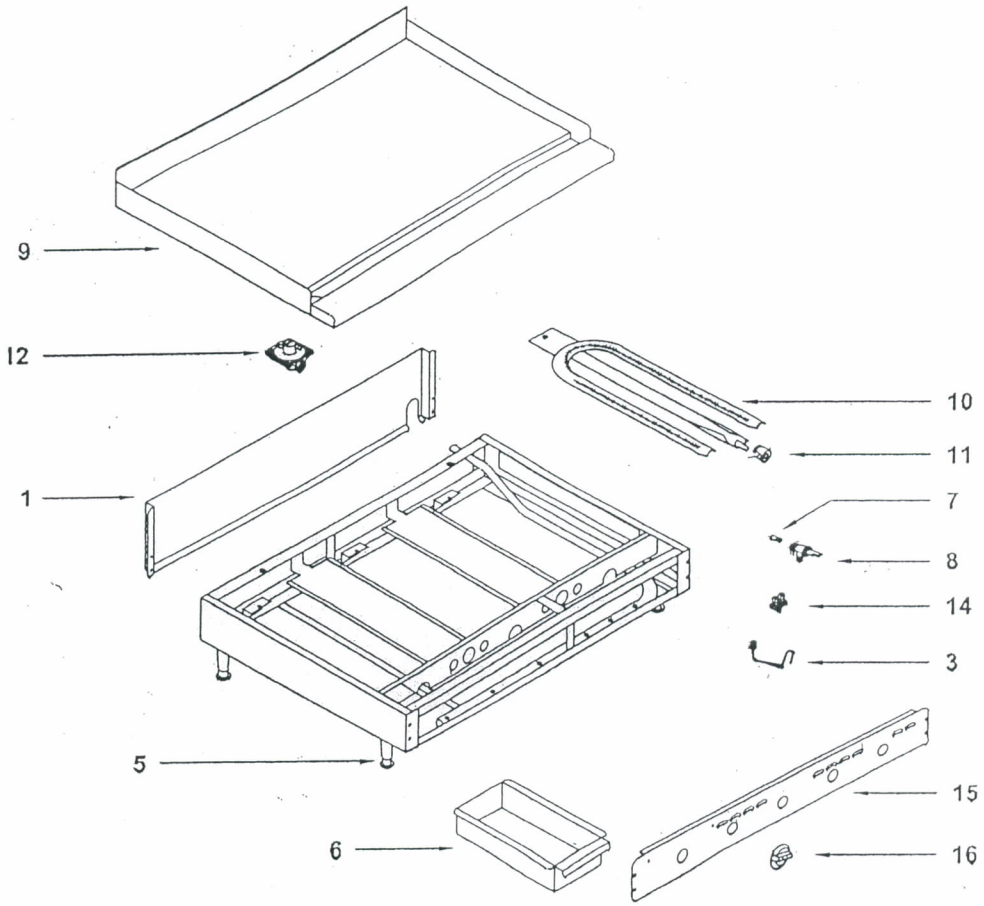

WHEN ORDERING PARTS, PLEASE PROVIDE THE FOLLOWING INFORMATION:

A. MODEL NUMBER
B. SERIAL NUMBER
C. PART NUMBER
D. TYPE OF GAS

PARTS LIST: MODELS RDGM 1800 (1812, 1824, 1830, 1836, 1848) -C

ITEM	PART #	DESCRIPTION	LIST	ITEM	PART #	DESCRIPTION	LIST
1	RDGM-01	BACK PANEL SPECIFY MODEL	?	9	RDGM-09	GRIDDLE PLATE ASSY SPECIFY MODEL	?
3	RDGM-03	PILOT TUBE W/TIP FOR DBL ADJ VALVE	$16.00	10	RDGM-10	BURNER W/AIR SHUTTER	$108.00
3A	RDGM-03A	PILOT TUBE W/TIP FOR SINGLE ADJ VALVE	$13.00	11	RDGM-11	AIR SHUTTER ONLY	$7.00
5	RDGM-05	ADJUSTABLE LEG	$19.00	12	RDGM-12	REGULATOR, NAT	$36.00
6	RDGM-06	GREASE PAN	$66.00	12	RDGM-12A	REGULATOR, LP	$36.00
7	RDGM-07	ORIFICE ONLY, NAT	$4.00	14	RDGM-14	PILOT ADJUST VALVE, DOUBLE	$17.00
7	RDGM-07A	ORIFICE ONLY, LP	$4.00	14	RDGM-14A	PILOT ADJUST VALVE, SINGEL	$14.00
8	RDGM-08	BURNER VALVE W/ORIFIFE NAT	$19.00	15	RDGM-15	FRONT PANEL - SPECIFY MODEL	?
8A	RDSM-08A	BURNER VALVE W/ORIFICE LP	$19.00	16	RDGM-16	VALVE KNOB	$11.00

RANKIN DELUX, INC. MODEL RDGM MANUAL CONTROL GRIDDLE

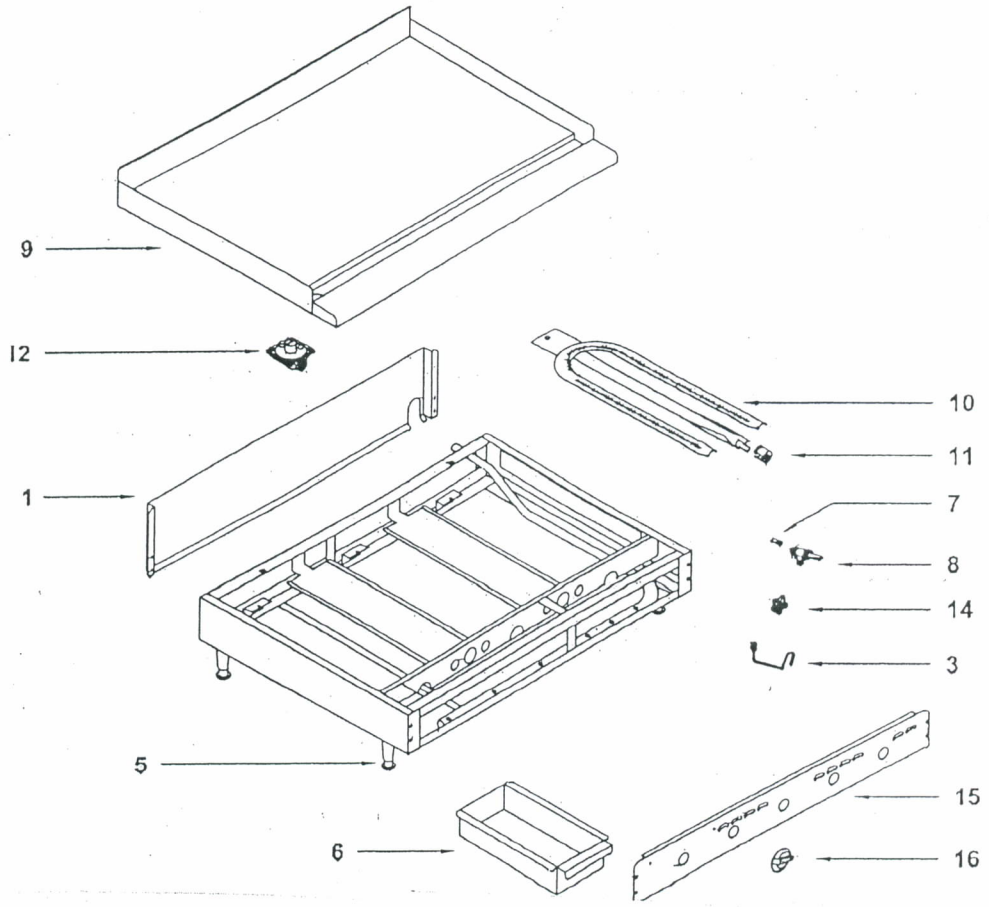

WHEN ORDERING PARTS, PLEASE PROVIDE THE FOLLOWING INFORMATION:

A. MODEL NUMBER
B. SERIAL NUMBER
C. PART NUMBER
D. TYPE OF GAS

PARTS LIST: MODELS RDGM - (24, 36,48) - C

ITEM	PART #	DESCRIPTION	LIST	ITEM	PART#	DESCRIPTION	LIST
1	RDGM-D-01	BACK PANEL -SEPCIFY MODEL	?	9	RDGM-D-09	GRIDDLE PLATE ASSY, SPECIFY MODEL	?
3	RDGM-D-03	PILOT TUBE W/TIP FOR DBL ADJ VALVE	$16.00	10	RDGM-D-10	BURNER W/AIR SHUTTER	$108.00
3	RDGM-D-03A	PILOT TUBE W/TIP FOR SINGLE ADJ VALVE	$13.00	11	RDGM-D-11	AIR SHUTTER ONLY	$7.00
5	RDGM-D-05	ADJUSTABLE LEG	$19.00	12	RDGM-D-12	REGULATOR NAT	$36.00
6	RDGM-D-06	GREASE PAN	$66.00	12	RDGM-D-12A	REGULATOR , LP	$36.00
7	RDGM-D-07	ORIFICE ONLY, NAT	$4.00	14	RDGM-D-14	PILOT ADJUSTMENT VALVE, DOUBLE	$17.00
7	RDGM-07A	ORIFICE ONLY, LP	$4.00	14	RDGM-D-14A	PILOT ADJUSTMENT VALVE, SINGLE	$14.00
8	RDGM-D-08	BURNER VALVE W/ORIFICE, NAT	$19.00	15	RDGM-D-15	FRONT PANEL- SPECIFY MODEL	?
8	RDGM-D-08A	BURNER VALVE W/ORIFICE, LP	$19.00	16	RDGM-D-16	VALVE KNOB	$11.00

RANKIN DELUX, INC. MODEL RDGM - D MANUAL CONTROL GRIDDLE

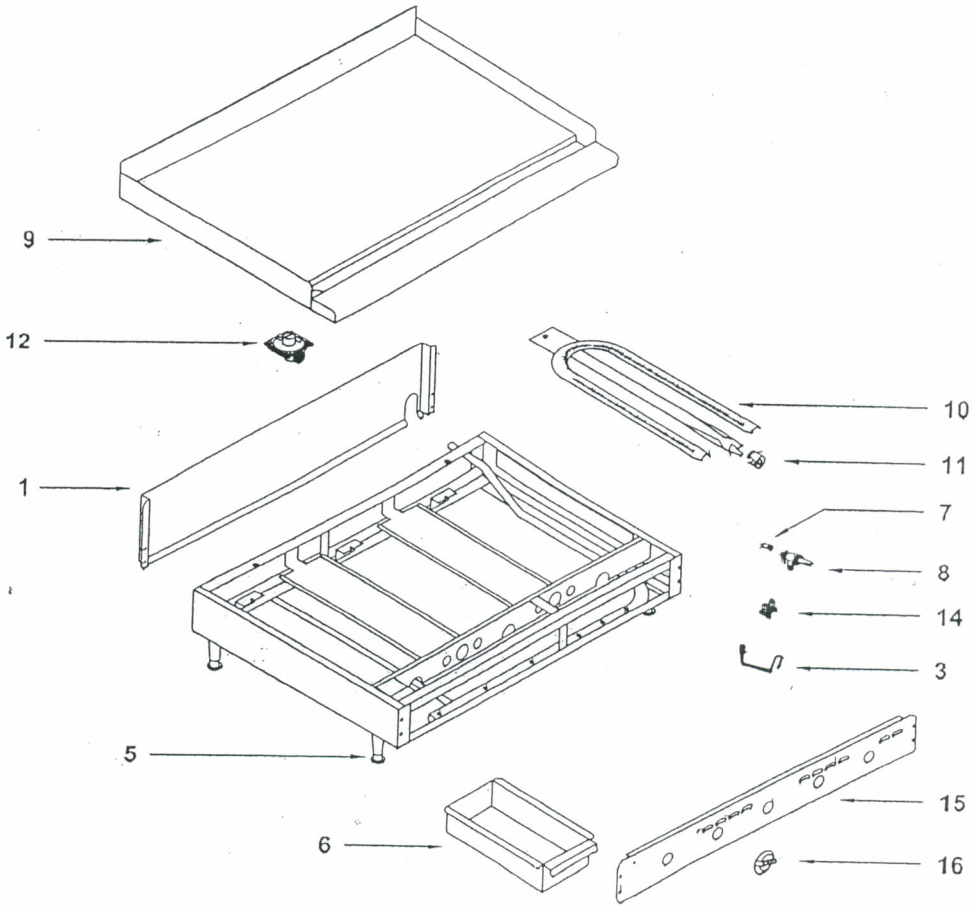

WHEN ORDERING PARTS, PLEASE PROVIDE THE FOLLOWING INFORMATION:

A. MODEL NUMBER
B. SERIAL NUMBER
C. PART NUMBER
D. TYPE OF GAS

PARTS LIST: MODELS RDGM D (2424, 2436, 2448, 2460, 2472) - C

ITEM	PART NUMBER	DESCRIPTION	LIST	ITEM	PART NUMBER	DESCRIPTION	LIST
1	GT-01	BACK PLATE (* SPECIFY MODEL)	$?	14	GT-14	AIR SHUTTER	$7.00
4	GT-04	PILOT TUBE WITH TIP	$13.00	15	GT-15	REGULATOR (NATURAL)	$36.00
6	GT-06	ADJUSTABLE LEG	$19.00	15A	GT-15A	REGUALTOR (LP)	$36.00
7	GT-07	GREASE PAN	$66.00	17	GT-17	FRONT PANEL (*SPECIFY MODEL)	?
7A	GTRG-07A	REAR GUTTER GREASE DRAWER	$86.00	18	GT-18	BEZEL	$11.00
8	GT-08	ORIFICE (NATURAL)	$4.00	19	GT-19	THERMOSTAT KNOB	$11.00
8A	GT-08A	ORIFICE (LP)	$4.00	20	GT-20	SAFETY THERMOCOUPLE	$14.00
9	GT-09	THERMOSTAT	$138.00	21	GT-21	SAFETY PILOT (NATURAL)	$14.00
10	GT-10	PILOT ADJUSTMENT VALVE (DOUBLE)	$17.00	21A	GT-21A	SEFETY PILOT (LP)	$14.00
10A	GT-10A	PILOT ADJUSTMENT VALVE (SINGLE)	$14.00	22	GT-22	SAFETY VALVE	$110.00
11	GT-11	GRIDDLE PLATE (*SPECIFY MODEL)	?	24	GT-24	ELBOW	$19.00
13	GT-13	BURNER	$42.00	25	GT-25	THERMOSTAT FLANGE	$14.00
13A	GT-13A	BURNER (REAR GUTTER)	$108.00				

RANKIN DELUX, INC. MODEL GT THERMOSTATIC GRIDDLE

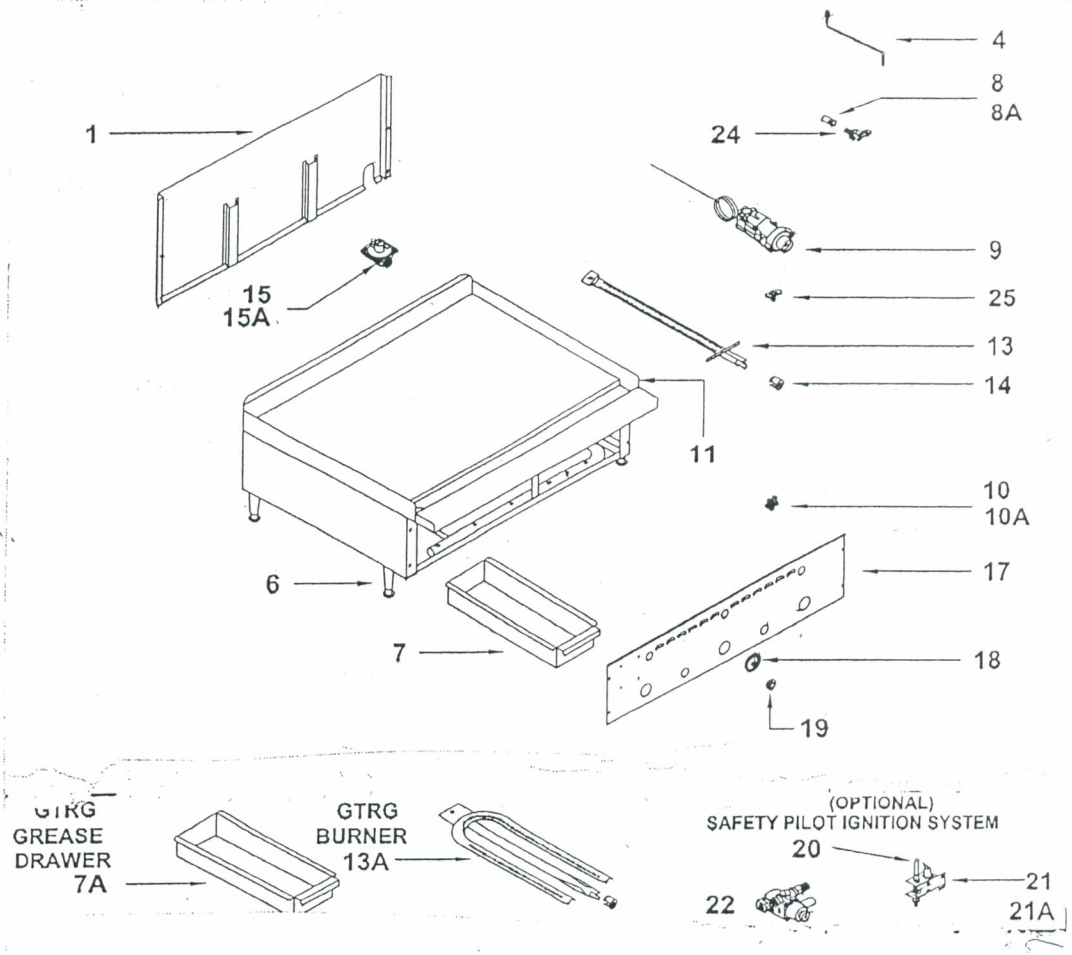

WHEN ORDERING PARTS, PLEASE PROVIDE THE FOLLOWING INFORMATION:

A. MODEL NUMBER
B. SERIAL NUMBER
C. PART NUMBER
D. TYPE OF GAS

PARTS LIST: MODELS GT - (12, 24, 36, 48, 60, 72) - C

ITEM	PART NUMBER	DESCRIPTION	LIST	ITEM	PART NUMBER	DESCRIPTION	LIST
1	RD80-01	GRIDDLE PLATE ASSEMBLY * SPECIFY MODEL	?	13	RD80-13	ADJUSTABLE LEG	$28.00
2	RD80-02	BURNER WITH AIR SHUTTER	$108.00	14	RD80-14	REGULATOR, NAT	$36.00
3	RD80-03	AIR SHUTTER ONLY	$7.00	14A	RD80-14A	REGULATOR, LP	$36.00
4	RD80-04	PILOT TUBE W/TIP	$13.00	16	RD80-16	GREASE DRAWER	$66.00
5	RD80-05	ORIFICE ONLY, NATURAL	$4.00	16A	RD80RG-16A	GREASE DRAWER	$86.00
5	RD80-05A	ORIFICE ONLY, L.P.	$4.00	17	RD80-17	ALUM TUBE W/BRASS FTG	$14.00
6	RD80-06	BJWA THERMOSTAT	$138.00	18	RD80-18	GAS SVC SHUTT OFF VALVE	$49.00
7	RD80-07	PILOT ADJUSTMENT VALVE	$17.00	19	RD80-19	3/4" X 3/4" X 13 1/2" EXT PIPE	$11.00
8	RD80-08	FRONT PANEL *SPECIFY MODEL	?	20	RD80-20	SAFETY THERMOCOUPLE	$14.00
9	RD80-09	BJWA BEZEL	$11.00	21	RD80-21	SAFETY PILOT NATURAL	$14.00
10	RD80-10	BJWA DIAL	$11.00	21A	RD80-21A	SAFETY PILOT LP	$14.00
11	RD80-11	BACK PANEL *SPECIFY MODEL	?	22	RD80-22	SAFETY VALVE	$110.00

RANKIN DELUX, INC. MODEL RD80 THERMOSTATIC CONTROL GRIDDLE

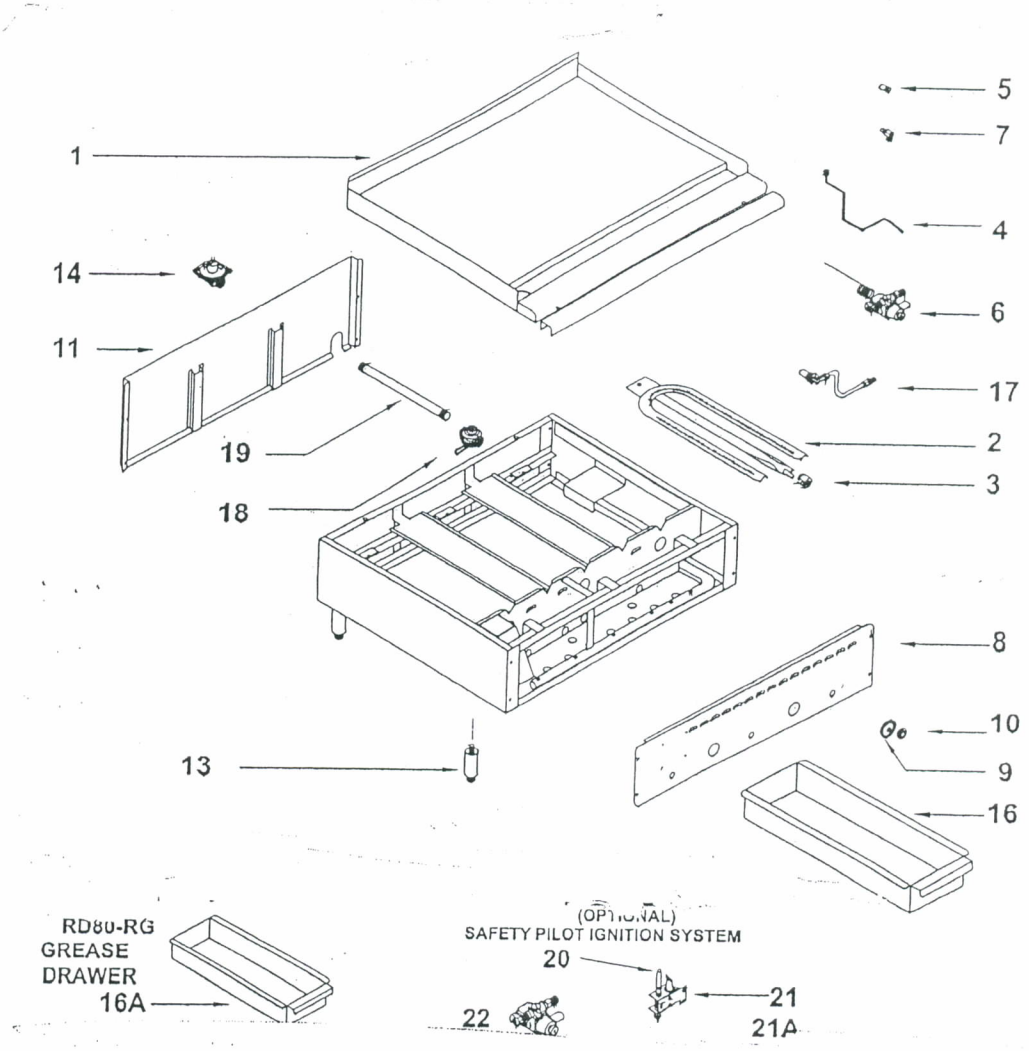

WHEN ORDERING PARTS, PLEASE PROVIDE THE FOLLOWING INFORMATION:

A. MODEL NUMBER C. PART NUMBER

B. SERIAL NUMBER D. TYPE OF GAS

ITEM	PART #	DESCRIPTION	LIST	ITEM	PART #	DESCRIPTION	LIST
1	RD85-01	GRIDDLE PLATE ASEEMBLY *SPECIFY MODEL	?	13	RD85-13	BACK PANEL * SPECIFY MODEL	?
2	RD85-02	BURNER WITH AIR SHUTTER	$108.00	14	RD85-14	POWER CORD	$28.00
3	RD85-03	AIR SHUTTER ONLY	$7.00	16	RD85-16	ADJUSTABLE LEG	$28.00
4	RD85-04	PILOT TUBE W/TIP	$11.00	17	RD85-17	REGULATOR, NAT	$36.00
5	RD85-05	ORIFICE ONLY, NATURAL	$4.00	17	RD85-17A	REGULATOR, LP	$36.00
5	RD85-05A	ORIFICE ONLY, LP	$4.00	18	RD85-18	GAS SVC SHUT OFF VALVE	$49.00
6	RD85-06	SOLENOID VALVE	$82.00	19	RD85-19	HEAT SHIELD W/INSULATION * SPECIFY MODEL	?
7	RD85-07	PILOT ADJUSTMENT VALVE	$17.00	20	RD85-20	GREASE DRAWER	$64.00
8	RD85-08	SOLID STATE THERMOSTAT	$125.00	21	RD85-21	3/4" X 3/4" X 13 1/2" EXT PIPE	$11.00
9	RD85-09	BURNER IGN. IND LIGHT , RED	$25.00	22	RD85-22	SENSOR PROBE	$82.00
10	RD85-10	FRONT COMP HEAT SHIELD *SPECIFY MODEL	?	23	RD85-23	TOGGLE SWITCH	$4.00
11	RD85-11	FRONT PANEL * SPECIFY MODEL	?	25	RD85-25	ON/OFF IND LIGHT, GREEN	$25.00
12	RD85-12	THERMOSTAT KNOB	$11.00				

RANKIN DELUX, INC. MODEL RD 85 SOLID STATE GRIDDLE

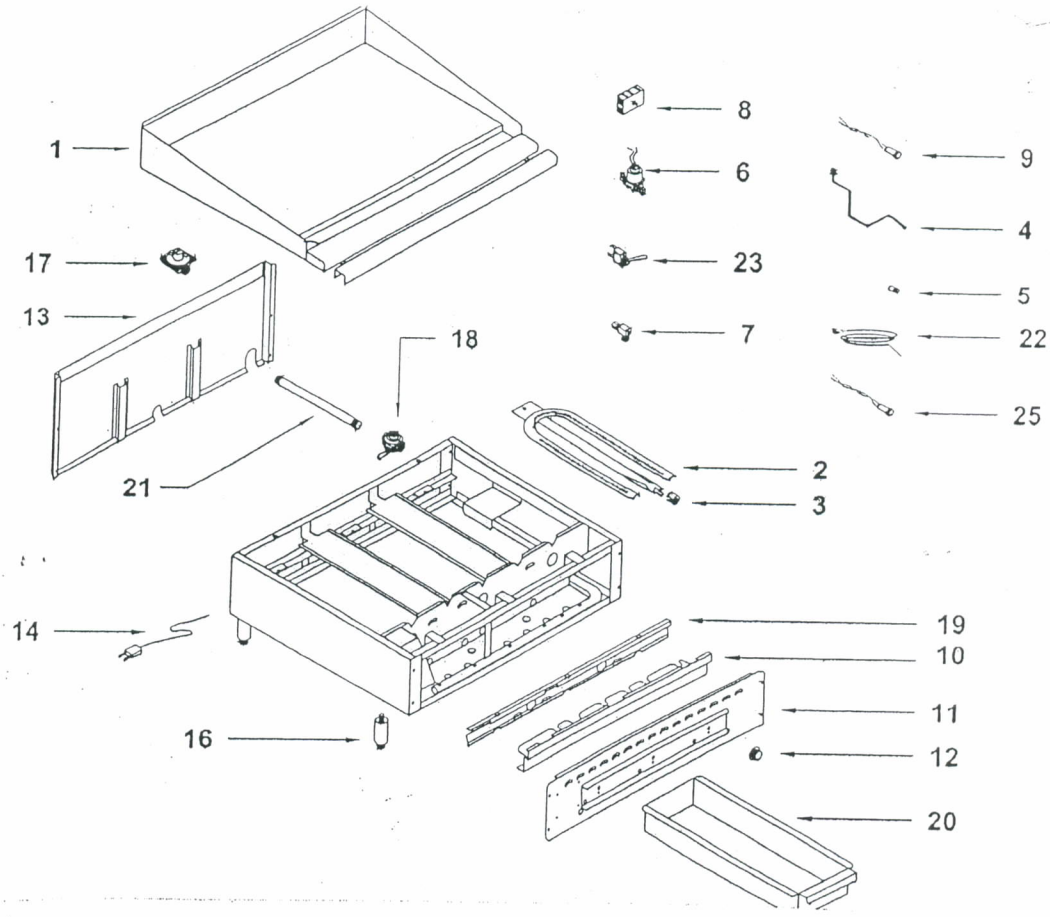

WHEN ORDERING PARTS, PLEASE PROVIDE THE FOLLOWING INFORMATION:

A. MODEL NUMBER C. PART NUMBER
B. SERIAL NUMBER D. TYPE OF GAS

ITEM	PART #	DESCRIPTION	LIST	ITEM	PART #	DESCRIPTION	LIST
1	RD85SAE-01	GRIDDLE PLATE ASSEMBLY *SPECIFY MODEL	?	14	RD85SAE-14	POWER CORD	$28.00
2	RD85SAE-02	BURNER WITH AIR SHUTTER	$112.00	16	RD85SAE-16	ADJUSTABLE LEG	$28.00
3	RD85SAE-03	AIR SHUTTER ONLY	$7.00	17	RD85SAE-17	REHULATOR, NAT	$36.00
4	RD85SAE-04	PILOT TUBE W/TIP	$11.00	17	RD85SAE-17A	REGULAOR, LP	$36.00
5	RD85SAE-05	ORIFICE ONLY, NATURAL	$4.00	18	RD85SAE-18	GAS SVC SHUT OFF VALVE	$49.00
5	RD85SAE-05A	ORIFICE ONLY, LP	$4.00	20	RD85SAE-20	FLAME SWITCH	$150.0
6	RD85SAE-06	SOLENOID VALVE	$82.00	21	RD85SAE-21	SPARK IGNITOR	$82.00
7	RD85SAE-07	PILOT ADJUSTMENT VALVE	$16.00	22	RD85SAE-22	GREASE DRAWER	$47.00
8	RD85SAE-08	SOLID STATE THERMOSTAT	$125.00	23	RD85SAE-23	BRACKET FOR IGN & FLAME SWITCH	$10.00
9	RD85SAE-09	BURNER IGN LIGHT, RED	$25.00	24	RD85SAE-24	FRONT COMP HEAT SHIELD * SPECIFY MODEL	$?
10	RD85SAE-10	SENSOR PROBE	$82.00	25	RD85SAE-25	HEAT SHIELD W/INSULATION *SPECIFY MODEL	?
11	RD85SAE-11	FRONT PANEL * SPECIFY MODEL	?	26	RD85SAE-26	3/4" X 3/4" X 13 1/2 EXT PIPE	$11.00
12	RD85SAE-12	THERMOSTAT KNOB	$11.00	27	RD85SAE-27	TOGGLE SWITCH	$4.00
13	RD85SAE-13	BACK PANEL *SPECIFY	?	28	RD85SAE-28	ON/OFF IND LIGHT GREEN	$25.00

RANKIN DELUX, INC. MODEL RD 85 SAE SOLID STATE GRIDDLE W/ ELEC. IGN.

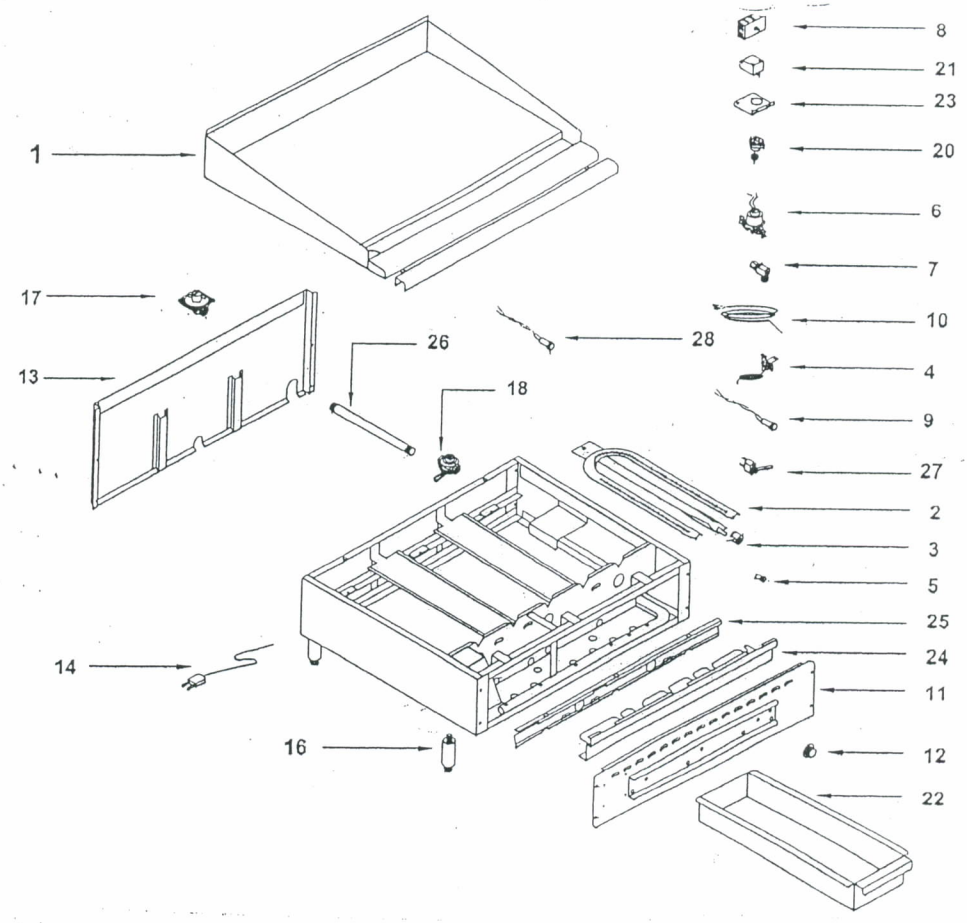

WHEN ORDERING PARTS, PLEASE PROVIDE THE FOLLOWING INFORMATION:

A. MODEL NUMBER C. PART NUMBER

B. SERIAL NUMBER D. TYPE OF GAS

PARTS LIST: MODELS RD85SAE (24, 36, 48, 60, 72) -C

ITEM	PART #	DESCRIPTION	LIST	ITEM	PART #	DESCRIPTION	LIST
1	RD90-01*	GRIDDLE PLATE ASSEMBLY (* SPECIFY MODEL)	?	15	RD90-15	POWER CORD	$28.00
2	RD90-02	BURNER	$198.00	17	RD90-17	ADJUSTABLE LEG	$28.00
3	RD90-03	PILOT ASSEMBLY	$54.00	18	RD90-18	GAS REGULATOR - NATURAL	$36.00
4	RD90-04	NATURAL ORIFICE	$4.00	18	RD90-18A	GAS REGULATOR - LP	$36.00
4	RD90-04A	L.P ORIFICE	$4.00	19	RD90-19	GAS SERVICE SHUT OFF VALVE	$49.00
5	RD90-05	SOLENIOD VALVE	$82.00	21	RD90-21	FLAME SWITCH	$150.0
6	RD90-06	TOGGLE SWITCH	$11.00	22	RD90-22	SPARK IGNITOR	$82.00
7	RD90-07	SENSOR PROBE	$82.00	23	RD90-23	GREASE DRAWER	$64.00
8	RD90-08	SOLID STATE THERMOSTAT	$125.00	24	RD90-24	3/4" X 3/4" X 13 1/2" EXTENSION PIPE	$11.00
9	RD90-09	BURNER IGN. INDICATOR LIGHT, RED	$25.00	25	RD90-25	INNER CONT COMP HEAT SHIELD, SPECIFY MODEL	?
10	RD90-10	CONTROL PANEL *SPECIFY MODEL	?	26	RD90-26	BURNER COMP HEAT SHIELD, SPECIFY MODEL	?
11	RD90-11	THERMOSTAT DIAL	$11.00	27	RD90-27	BRACKET FOR IGN AND FLAME SWITCH	$11.00
12	RD90-12	UPPER FRONT PANEL * SPECIFY MODEL	?	28	RD90-28	ON/OFF IND, LIGHT, GREEN	$25.00
13	RD90-13	CONTROL COMP DOOR *SPECIFY MODEL	?				
14	RD90-14	BACK PANEL *SPECIFY MODEL	?				

RANKIN DELUX, INC. MODEL RD90 PULSAR GRIDDLE

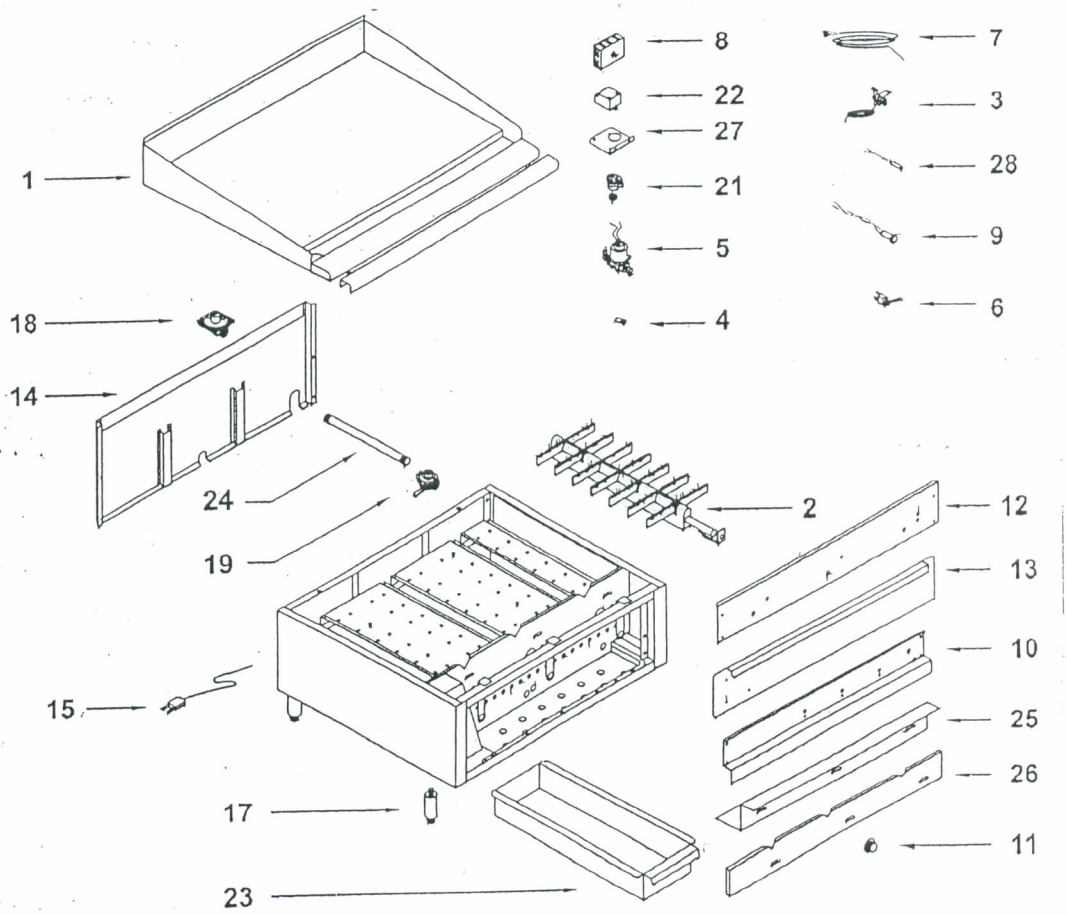

WHEN ORDERING PARTS, PLEASE PROVIDE THE FOLLOWING INFORMATION:

A. MODEL NUMBER
B. SERIAL NUMBER
C. PART NUMBER
D. TYPE OF GAS

PARTS LIST: MODELS RD90 (24, 36, 48, 60, 72) - C

ITEM	PART NUMBER	DESCRIPTION	LIST	ITEM	PART NUMBER	DESCRIPTION	LIST
1	RD100-01	GRIDDLE PLATE ASSEMBLY *SPECIFY MODEL	?	13	RD100-13*	FRONT PANEL *SPECIFY MODEL	?
2	RD100-02	INFRA-RED BURNER	$406.00	14	RD100-14*	BACK PANEL *SPECIFY MODEL	?
3	RD100-03	PILOT ASSEMBLY	$54.00	15	RD100-15	POWER CORD	$28.0
4	RD100-04	NATURAL ORIFICE	$4.00	16	RD100-16*	N/A*	N/A
4A	RD100-04A	L.P ORIFICE	$4.00	17	RD100-17	ADJUSTABLE LEG	$28.0
5	RD100-05	SOLENOID VALVE	$82.00	18	RD100-18	GAS REGULATOR - NATURAL	$36.0
6	RD100-06	TOGGLE SWITCH	$11.00	18A	RD100-18A	GAS REGULATOR - L.P	$36.0
7	RD100-07	SENSOR PROBE	$103.00	19	RD100-19	GAS SERVICE SHUT OFF VALVE	$49.0
8	RD100-08	SOLID STATE THERMOSTAT	$140.00	21	RD100-21	FLAME SWITCH	$150.0
9	RD100-09	ON/OFF INDICATOR LIGHT - GREEN	$25.00	22	RD100-22	SPARK IGNITOR	$82.0
9A	RD100-09A	BURNER IGNITION LIGHT - RED	$24.00	23	RD100-23	GREASE DRAWER	$64.0
10	RD100-10	BURNER SPACER - CENTER	$25.00	24	RD100-24	BURNER SPACER - RIGHT SIDE	$18.0
11	RD100-11	KNOB	$11.00	25	RD100-25	NIPPLE EXTENSION	$11.0
12	RD100-12	BURNER SPACER - LEFT SIDE	$23.00	26	RD100-26	HEAT SHIELD *SPECIFY MODEL	?

RANKIN DELUX, INC. MODEL RD100 INFRARED GRIDDLE

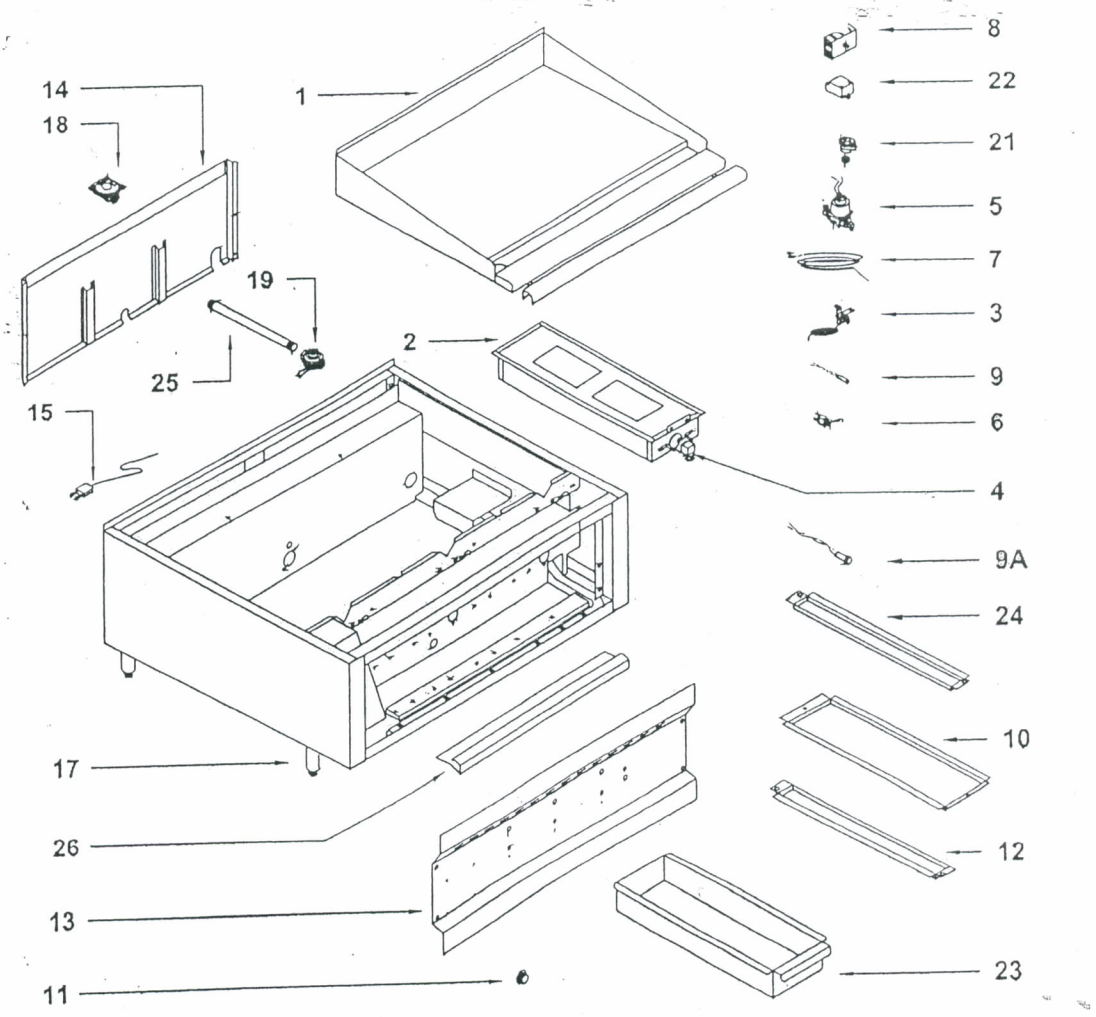

WHEN ORDERING PARTS, PLEASE PROVIDE THE FOLLOWING INFORMATION:

A. MODEL NUMBER
B. SERIAL NUMBER
C. PART NUMBER
D. TYPE OF GAS

PARTS LIST: MODELS RD100 - (24, 36, 48, 60, 72, 84) - C

ITEM	PART NUMBER	DESCRIPTION	LIST	ITEM	PART NUMBER	DESCRIPTION	LIST
1	RTYG-01	RTYG PLATE	?	13	RTYG-13	PILOT VALVE, DOUBLE	$17.00
3	RTYG-03	LARGE BURNER	$99.00	14	RTYG-14	ADJUSTABLE LEG	$17.00
4	RTYG-04	SMALL BURNER	$48.00	15	RTYG-15	PILOT TUBE	$14.00
5	RTYG-05	GASKET	$4.00	16	RTYG-16	VALVE ADAPTER ELBOW, UPPER	$16.00
6	RTYG-06	VENTURI	$28..00	17	RTYG-17	VALVE ADAPTER ELBOW, LOWER	$8.00
7	RTYG-07	AIR SHUTTER	$5.00	19	RTYG-19	ORIFICE, NAT	$4.00
8	RTYG-08	REGULATOR, NAT	$36.00	19	RTYG-19A	ORIFICE, LP	$4.00
8	RTYG-08A	REGULATOR, LP	$36.00	20	RTYG-20	HEAT SHIELD	?
10	RTYG-10	FRONT PANEL	?	22	RTYG-22	SAFETY PILOT ASSEMBLY, OPTIONAL	$14.00
11	RTYG-11	KNOB	$11.00	23	RTYG-23	SAFETY VALVE, OPTIONAL	$110.00
12	RTYG-12	BUNER VALVE (SPECIFY GAS*)	$19.00				

RANKIN DELUX, INC. MODEL RTYG TEPPAN - YAKI GRIDDLE

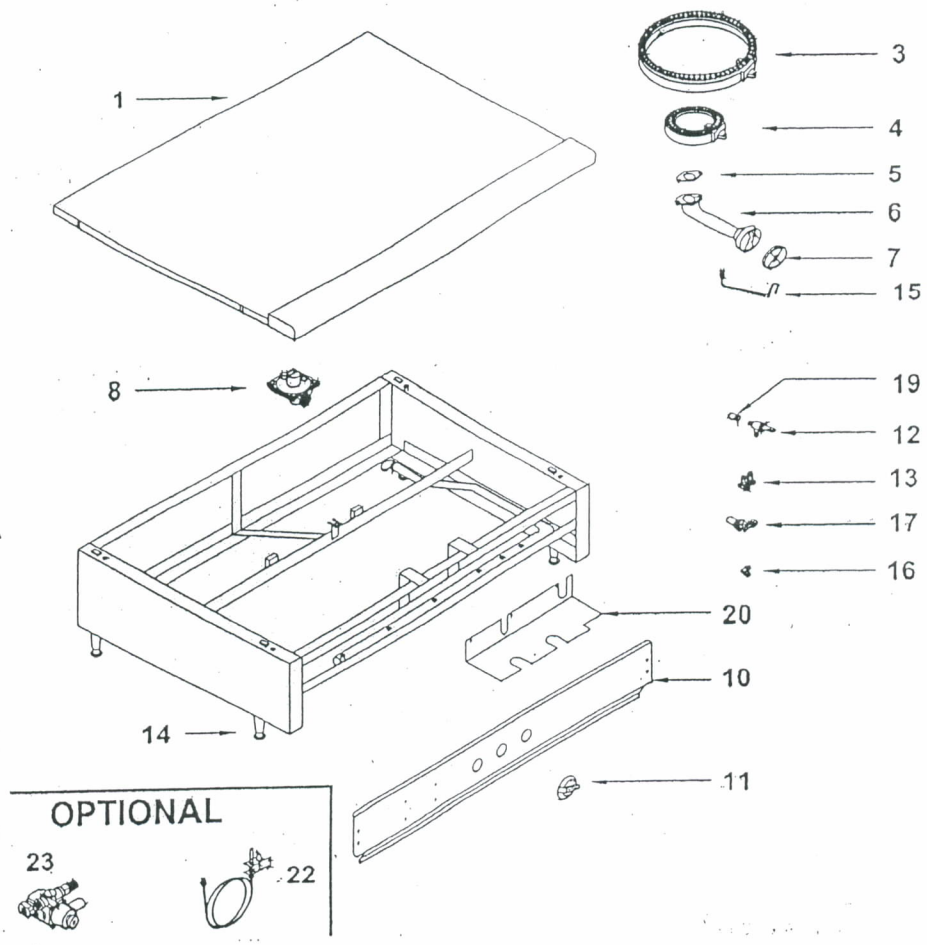

WHEN ORDERING PARTS PLEASE PROVIDE THE FOLLOWING INFORMATION:

A. MODEL NUMBER C.PART NUMBER

B. SERIAL NUMBER D.TYPE OF GAS

PARTS LIST: MODEL RTYG (24, 36, 48, 60) - C

ITEM	PART #	DESCRIPTION	LIST	ITEMS	PART #	DESCRIPTION	LIST
1	RDHP-112-01	TOP GRATE 12 X 12	$96.00	11	RDHP-E-C-11	AIR SHUTTER	$5.00
1A	RDHP-212-01	TOP GRATE 24 X 24	$156.00	12	RDHP-12 (SPECIFY MODEL)	FRONT TRIM	?
3	RDHP-E-C-03	PILOT TUBE WITH TIP (FRONT)	$14.00	13	RDHP-13 (SPECIFY MODEL)	FRONT PANEL	?
3A	RDHP-E-C-03A	PILOT TUBE WITH TIP (REAR)	$13.00	14	RDHP-E-C-14	VALVE KNOB	$11.00
5	RDHP-E-C-05	REGULATOR (NAT)	$36.00	15	RDHP-E-C-15	ORIFICE (NAT)	$4.00
5A	RDHP-E-C-05A	REGULATOR (LP)	$36.00	15A	RDHP-E-C-15A	ORIFICE (LP)	$4.00
7	RDHP-E-C-07	ADJUSTABLE LEG	$19.00	16	RDHP-E-C-16	PILOT VALVE (SINGLE)	$14.00
8	RDHP-E-C-08	BURNER VALVE, NATURAL	$19.00	16A	RDHP-E-C-16A	PILOT VALVE (DOUBLE)	$17.00
8A	RDHP-E-C08A	BURNER VALVE, LP	$19.00	18	RDHP-E-C-18 (SPECIFY MODEL)	DRIP PAN (*SPECIFY MODEL	?
10	RDHP-E-C-10	EASY CLEAN BURNER W/SHORT VENTURI	$55.00				
10A	RDHP-E-C-10A	EASY CLEAN BURNER W/LONG VENTURI	$66.00				

RANKIN DELUX, INC. MODEL RDHP OPEN BURNER HOT PLATE

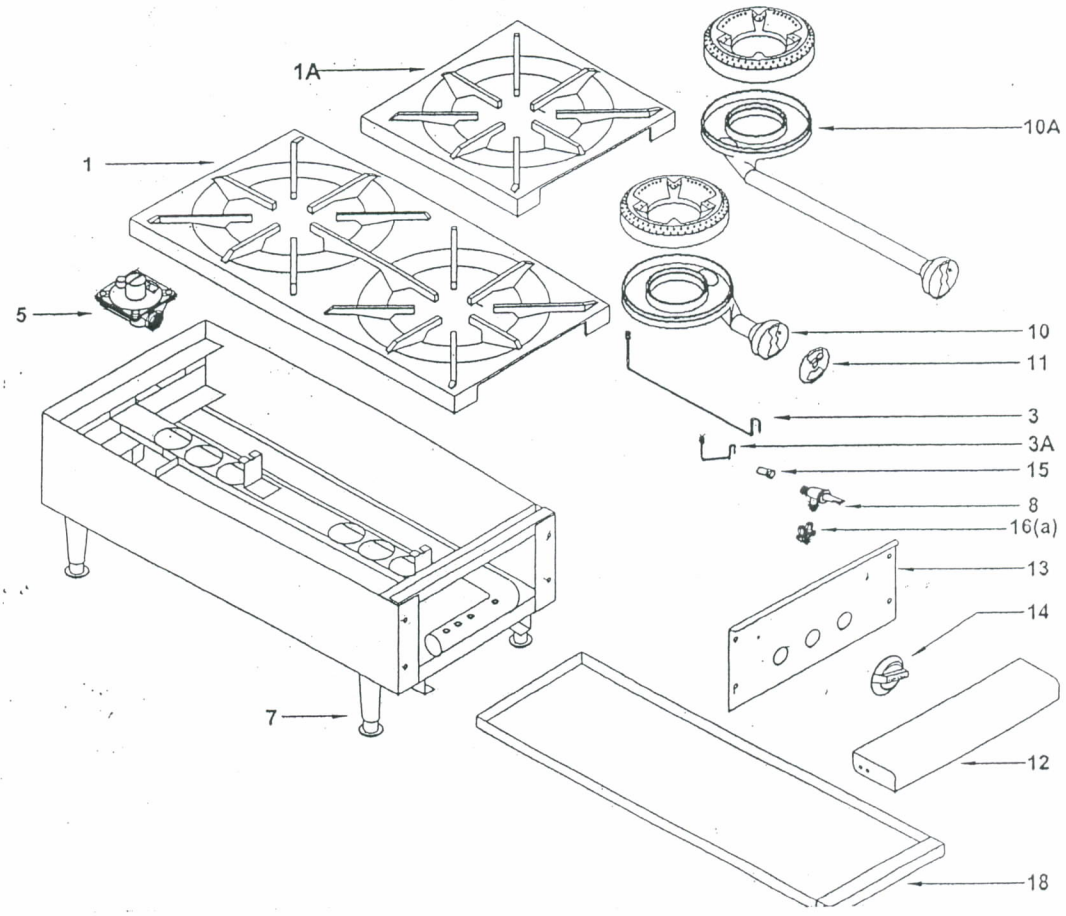

PARTS LIST: MODELS RDHP(112, 212, 224, 336, 424, 636, 848) - E-C

WHEN ORDERING PARTS PLEASE PROVIDE THE FOLLOWING INFORMATION:

A. MODEL NUMBER C. PART NUMBER
B. SERIAL NUMBER D. TYPE OF GAS

ITEM	PART #	DESCRIPTION	LIST	ITEM	PART #	DESCRIPTION	LIST
1	SUHP-E-C-01	TOP GRATE	$96.00	13	SUHP-E-C-13	BURNER VALVE W/OUT ORIFICE	$17.00
4	SUHP-E-C-04	EASY CLEAN BURNER W/SHORT VENTURI	$55.00	14	SUHP-E-C-14	REGULATOR (NAT)	$36.00
5	SUHP-E-C-05	AIR SHUTTER	$5.00	14A	SUHP-E-C-14A	REGULATOR (LP)	$36.00
7	SUHP-E-C-07	ADJUSTABLE LEG	$19.00	15	SUHP-E-C-15	MIDDLE PLATE (* SPECIFY MODEL)	?
9	SUHP-E-C-09	REAR PILOT TUBE W/TIP (*SPECIFY RIGHT OR LEFT	$16.00	17	SUHP-E-C-17	FRONT CAP (SPECIFY MODEL)	?
9A	SUHP-E-C-09A	FRONT PILOT TUBE W/TIP	$13.00	18	SUHP-E-C-18	FRONT PANEL (* SPECIFY MODEL)	?
10	SUHP-E-C-10	PILOT ADJUSTMENT VALVE (DOUBLE)	$17.00	19	SUHP-E-C-19	VALVE KNOB	$11.00
11	SUHP-E-C-11	ORIFICE (NAT)	$4.00	20	SUHP-E-C-20	DRIP TRAY (*SPECIFY MODEL)	?
11A	SUHP-E-C-11A	ORIFICE (LP)	$4.00				
12	SUHP-E-C-12	3/8" ALUM TUBING W/COMP - 4 BENDS	$32.00				
12A	SUHP-E-C-12A	3/8" ALUM TUBING W/COMP - 6 BENDS	$32.00				

RANKIN DELUX. INC. MODEL SUHP-STEP UP - OPEN BURNER HOT PLATE

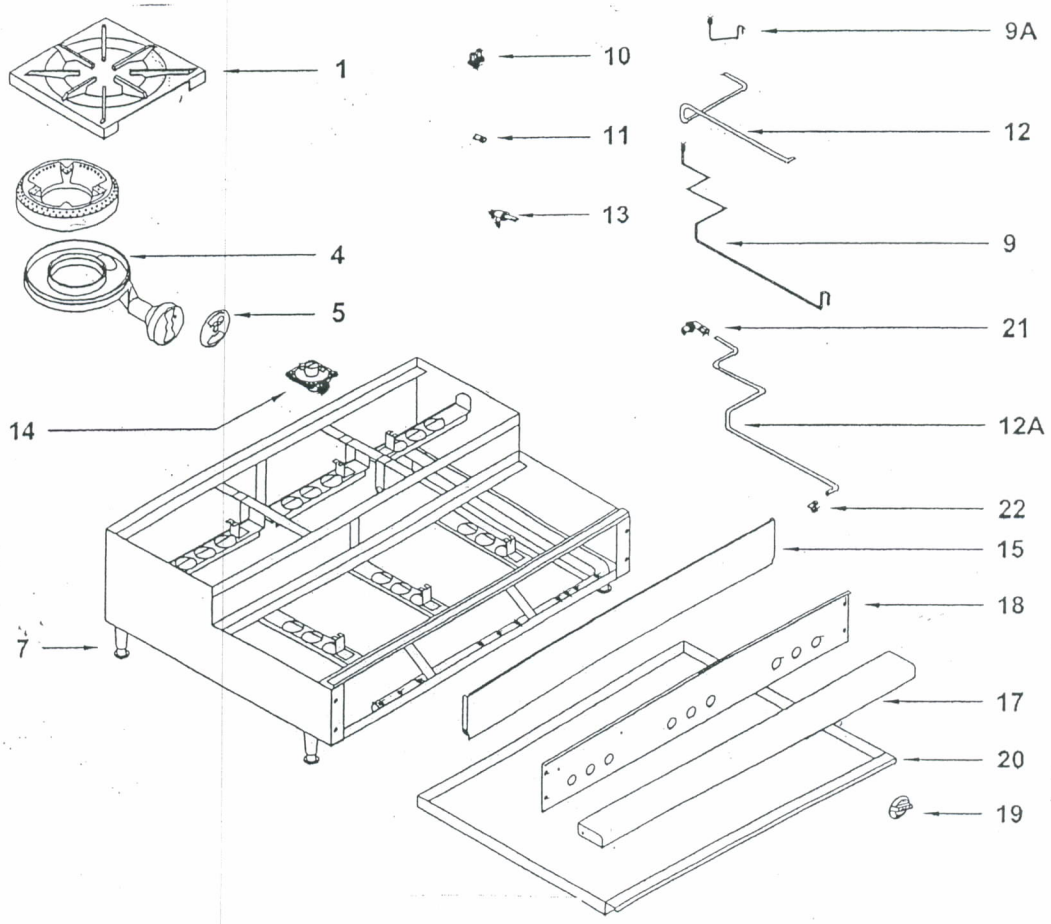

WHEN ORDERING PARTS PLEASE PROVIDE THE FOLLOWING INFORMATION:

A. MODEL NUMBER C. PART NUMBER

B. SERIAL NUMBER D.TYPE OF GAS

PARTS LIST: MODELS SUHP-(424, 636, 848)-E-C

ITEM	PART #	DESCRIPTION	LIST	ITEM	PART #	DESCRIPTON	LIST
1	SUHP-212-01	TOP GRATE	$96.00	12	SUHP-212-12	3/8" ALUM. TUBING W/COMP	$32.00
2	SUHP-212-02	BURNER HEAD	$71.00	13	SUHP-212-13	BURNER VALVE WITHOUT ORIFICE	$17.00
3	SUHP-212-03	GASKET	$4.00	14	SUHP-212-14	REGULATOR (NAT)	$36.00
4	SUHP-212-04	VENTURI	$22.00	14A	SUHP-212-14A	REGULATOR (LP)	$36.00
5	SUHP-212-05	AIR SHUTTER	$5.00	15	SUHP-212-15	MIDDLE PLATE	$18.00
7	SUHP-212-07	LEG	$19.00	17	SUHP-212-17	FRONT CAP	$20.00
9	SUHP-212-09	REAR PILOT TUBE W/TIP (SPECIFY SIDE)	$16.00	18	SUHP-212-18	FRONT PANEL	$22.00
9A	SUHP-212-09A	FRONT PILOT TUBE W/TIP	$13.00	19	SUHP-212-19	VALVE KNOB	$11.00
10	SUHP-212-10	PILOT ADJUSTMENT VALVE (DOUBLE)	$17.00	20	SUHP-212-20	DRIP TRAY	$46.00
11	SUHP-212-11	ORIFICE (NAT)	$4.00	22	SUHP-212-22	ORIFICE ELBOW FITTING	$11.00
11A	SUHP-212-11A	ORIFICE (LP)	$4.00	23	SUHP-212-23	FEMALE ELBOW FITTING (FOR BURNER VALVE)	$11.00

RANKIN DELUX, INC. MODEL SUHP-212 STEP UP OPEN BURNER HOT PLATE

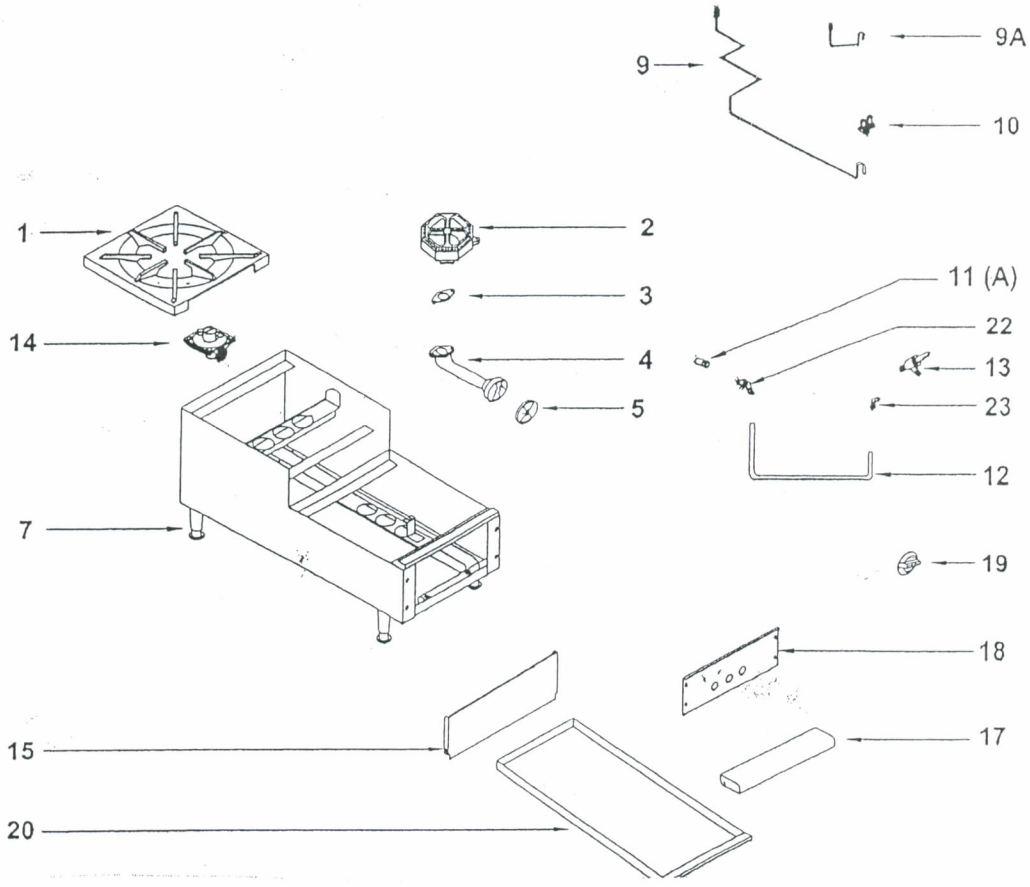

WHEN ORDERING PARTS PLEASE PROVIDE THE FOLLOWING INFORMATION:

A. MODEL NUMBER C. PART NUMBER

B. SERIAL NUMBER D.TYPE OF GAS

PARTS LIST: MODELS SUHP (212 Series Only*)

ITEM	PART NUMBER	DESCRIPTION	LIST	ITEM	PART NUMBER	DESCRIPTION	LIST
1	SSPR-01	TOP GRATE 18" X 22"	$296.00	11	SSPR-11	PILOT ADJUST VALVE	$14.00
2	SSPR-0203	BURNER HEAD COMPLETE	$296.00	12	SSPR-12	ORIFICE ONLY, NAT	$4.00
4	SSPR-04	UNIT BODY, SPECIFY MODEL	?	12	SSPR-12A	ORIFICE ONLY, LP	$4.00
5	SSPR-05	ADJUSTABLE FOOT	$19.00	13	SSPR-13	BURNER VALVE W/O ORIFICE	$17.00
6	SSPR-06	AIR SHUTTER ONLY	$5.00	15	SSPR-15	FRONT PANEL, SPECIFY MODEL	?
7	SSPR-07	PILOT TUBE W/TIP	$14.00	16	SSPR-16	VALVE KNOB	$11.00
8	SSPR-08	PILOT BRACKET	$8.00	17	SSPR-17	DRIP TRAY FOR SSPR-110	$66.00
9	SSPR-09	HEAT SHIELD , SPECIFY MODEL	?	17	SSPR-17A	DRIP TRAY FOR SSPR-220	$97.00
10	SSPR-10	REGULATOR, NAT	$36.00				
10	SSPR-10A	REGULATOR, LP	$36.00				

RANKIN DELUX, INC. MODEL SSPR SUPER STOCK POT RANGE

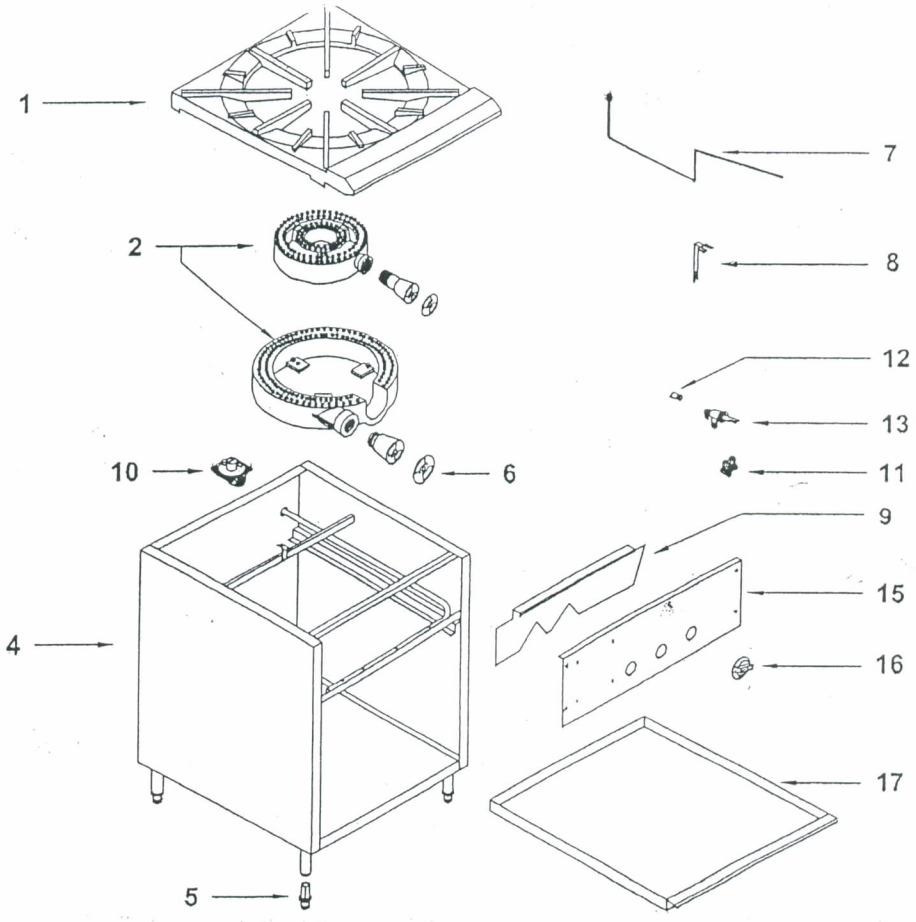

WHEN ORDERING PARTS PLEASE PROVIDE THE FOLLOWING INFORMATION:
A. MODEL NUMBER C.PART NUMBER
B. SERIAL NUMBER D.TYPE OF GAS

PARTS LIST: MODEL SSPR SUPER STOCK POT RANGE (110, 220) - C

ITEM	PART NUMBER	DESCRIPTION	LIST	ITEM	PART NUMBER	DESCRIPTION	LIST
1	SP-01	TOP GRATE 18" X 22"	$296.00	10	SP-10	PILOT TUBE W/TIP	$14.00
2	SP-02	REGULATOR, NATURAL GAS	$36.00	11	SP--11	ORIFICE ONLY, NAT GAS	$4
2A	SP-02A	REGULATOR, LP GAS	$36.00	11A	SP-11A	ORIFICE ONLY, LP GAS	$4.00
3	SP-03	ADJUSTABLE FOOT	$19.00	12	SP-12	BURNER VALVE W/OUT ORIFICE	$17.00
4	SP-04	BURNER HEAD, OUTSIDE	$99.00	13	SP-13	PILOT ADJUST VALVE, DOUBLE	$17.00
5	SP-05	BURNER HEAD, INSIDE	$52.00	14	SP-14	FRONT PANEL, SPECIFY MODEL	
6	SP-06	GASKET FOR BURNER HEAD	$4.00	15	SP-15	VALVE KNOB	$11.00
7	SP-07	BOLT FOR VENTURI	$4.00	16	SP-180-16	DRIP PAN FOR SPR-180	$66.00
8	SP-08	VENTURI W/AIR SHUTTER	$28.00	16	SP-360-16	DRIP PAN FOR SPR-360	$101.00
9	SP-09	AIR SHUTTER ONLY	$5.00	16	SP-540-16	DRIP PAN FOR SPR-540	$130.00

RANKIN DELUX, INC. MODEL SPR - STOCK POT RANGE

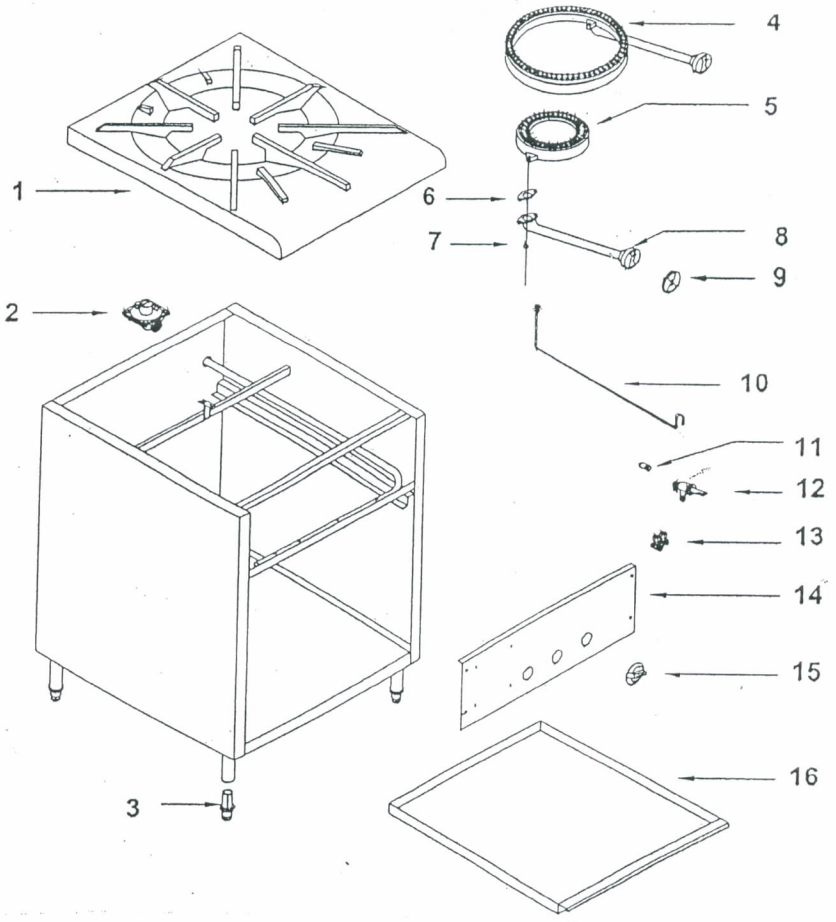

WHEN ORDERING PARTS PLEASE PROVIDE THE FOLLOWING INFORMATION:
A. MODEL NUMBER C.PART NUMBER
B. SERIAL NUMBER D.TYPE OF GAS

PARTS LIST: MODEL SPR-STOCK POT RANGE (180, 360, 540) - C

ITEM	PART NUMBERS	DESCRIPTION	LIST
1	RDOR-01	WOK RING ASSEMBLY	$246.00
2	RDOR-02	BURNER JET - NATURAL	$6.00
2	RDOR-02A	BURNER JET - LP	$6.00
3	RDOR-03	JET RING BURNER - NATURAL	$140.00
3	RDOR-03A	JET RING BURNER - LP	$140.00
5	RDOR-05	LEG WITH ADJUSTABLE FOOT	$19.00
6	RDOR-06	PILOT TUBE ASSEMBLY	$17.00
7	RDOR-07	REGULATOR - NATURAL	$36.00
7	RDOR-07A	REGULATOR - LP	$36.00
9	RDOR-09	SINGLE ADJUSTMENT PILOT VALVE	$14.00
10	RDOR-10	BURNER VALVE	$82.00
11	RDOR-11	FRONT PANEL	$136.00
12	RDOR-12	BURNER VALVE HANDLE	$19.00
13	RDOR-13	DRIP TRAY	$66.00

RANKIN DELUX, INC. MODEL OR ORIENTAL WOK RANGE

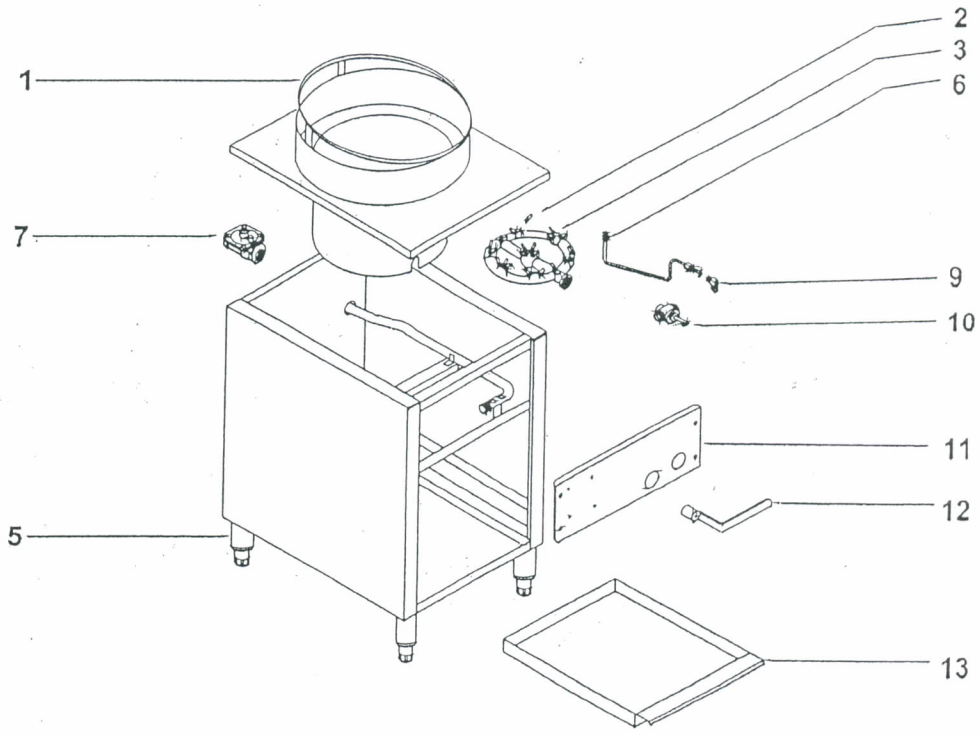

WHEN ORDERING PARTS, PLEASE PROVIDE THE FOLLOWING INFORMATION:

A. MODEL NUMBER
B. SERIAL NUMBER
C. PART NUMBER
D. TYPE OF GAS

ITEM	PART NUMBER	DESCRIPTION	LIST
1	RDCM-01	TOP COVER (SPECIFY MODEL)	?
2	RDCM-02	REGULATOR, NAT	$36.00
2	RDCM-02A	REGULATOR, LP	$36.00
3	RDCM-03	GAS VALVE W/ELBOW FITTNG	$22.00
3	RDCM-03A	ELBOW FITTING ONLY	$11.00
4	RDCM-04	PILOT TUBE VALVE	$17.00
6	RDCM-06	LIGHTER ARM	$28.00
7	RDCM-07	PILOT TUBE, ASSY - SPECIFY MODEL	$32.00
7	RDCM-08	CERAMIC BURNER 15" SPECIFY GAS	$387.00
8	RDCM-08	CERAMIC BURNER 27" SPECIFY GAS	$575.00
10	RDCM-10	WIRE RACK, SPECIFY MODEL	?
11	RDCM-11	front panel, SPECIFY MODEL	?
12	RDCM-12	VALVE KNOB	$8.00
13	RDCM-13	ADJUSTABLE LEG	$17.00
14	RDCM-14	HEAT SHIELD	?
15	RDCM-15	FLUE DEFLECTORS (*SPECIFY MODEL)	?
15A	RDCM-15A	FLUE DEFLECTORS (*SPECIFY MODEL)	?

RANKIN DELUX, INC. MODEL RDCM CHEESE MELTER / BROILER

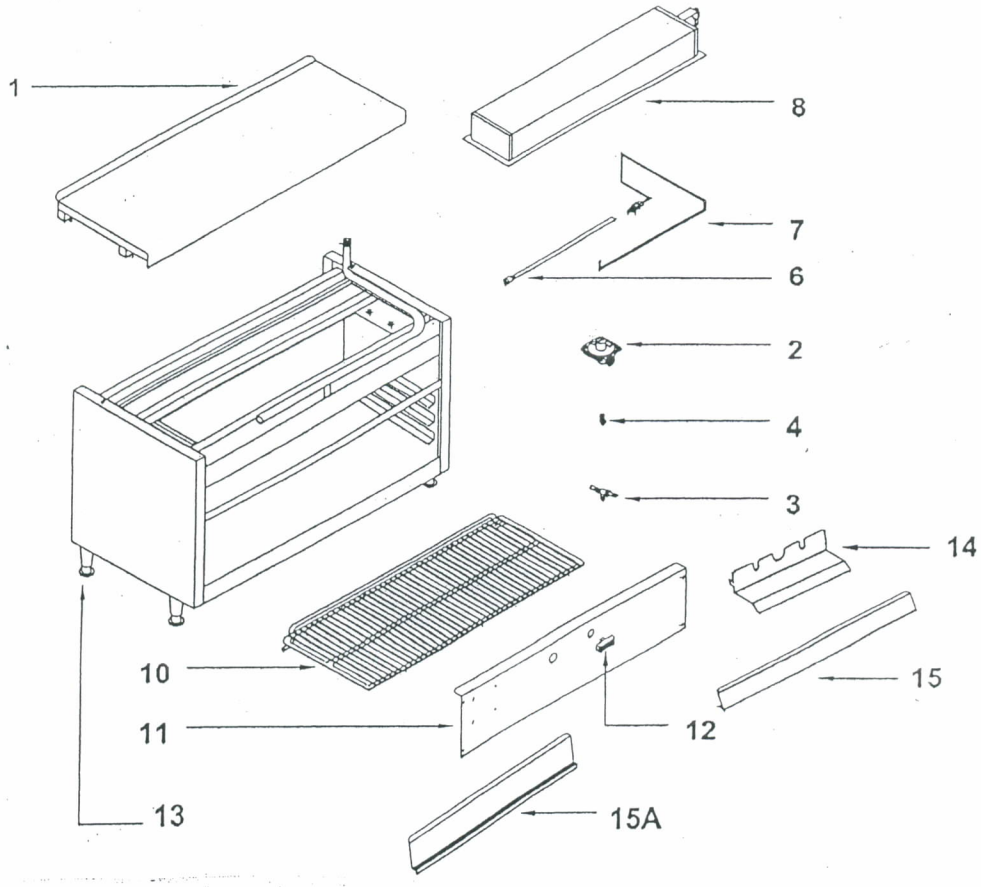

WHEN ORDERING PARTS, PLEASE PROVIDE THE FOLLOWING INFORMATION:

A. MODEL NUMBER C. PART NUMBER

B. SERIAL NUMBER D. TYPE OF GAS

ITEM	PART #	DESCRIPTION	LIST	ITEM	PART #	DESCRIPTION	LIST
1	ORHP-E-C-01	TOP GRATE	$86.00	12	ORHP-E-C-12	FRONT TRIM, SPECIFY MODEL	?
1A	ORHP-E-C-01A	WOK RING TOP	$170.00	13	ORHP-E-C-13	FRONT PANEL (* SPECIFY MODEL)	?
3	ORHP-E-C-03	PILOT TUBE W/TIP	$13.00	14	ORHP-E-C-14	VALVE KNOB	$11.00
5	ORHP-E-C-05	REGULATOR, NAT	$36.00	15	ORHP-E-C-15	ORIFICE, NAT	$4.00
5A	ORHP-E-C-05A	REGULATOR, LP	$36.00	15A	ORHP-E-C-15A	ORIFICE, LP	$4.00
7	ORHP-E-C-07	LEG	$19.00	16	ORHP-E-C-16	PILOT VALVE, SINGLE	$14.00
8	ORHP-E-C-08	BURNER VALVE	$19.00	16A	ORHP-E-C16A	PILOT VALVE, DOUBLE	$17.00
10	ORHP-E-C-10	EASY CLEAN BURNER W/SHORT VENTURI	$55.00	18	ORHP-E-C-18	GREASE TRAY, SPECIFY MODEL	?
11	ORHP-E-C-11	AIR SHUTTER	$5.00				

RANKIN DELUX, INC. MODEL ORHP - OPEN BURNER HOT PLATE

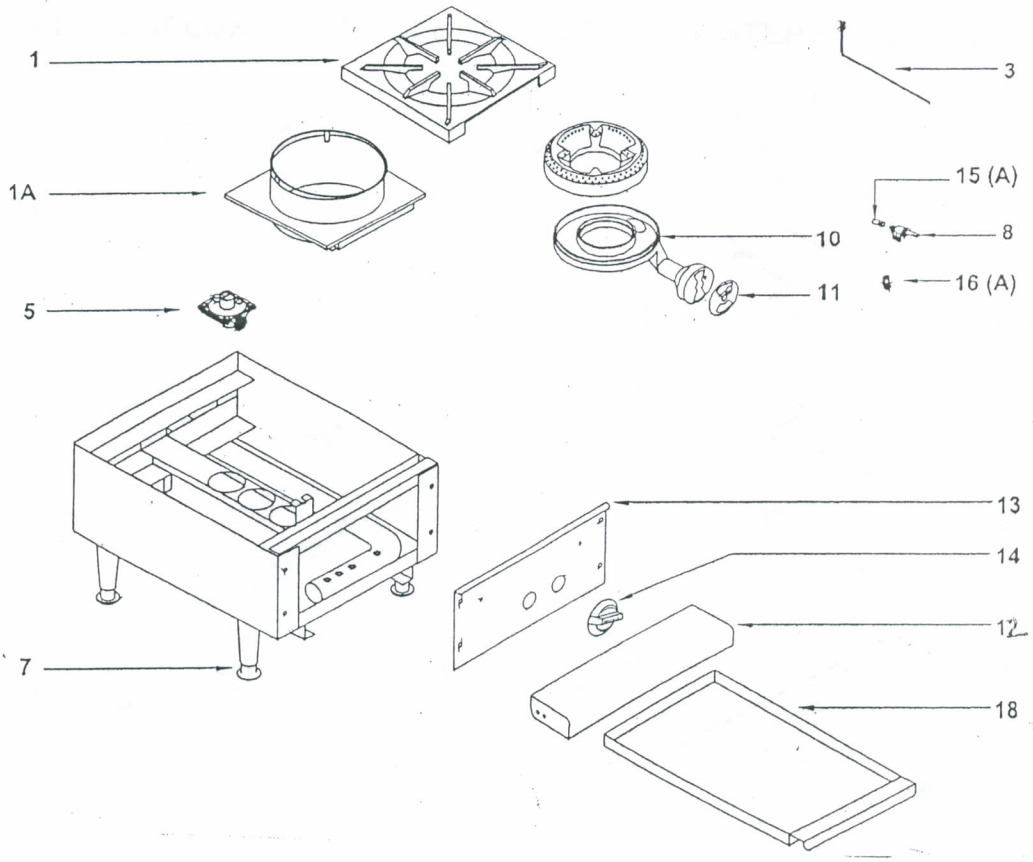

WHEN ORDERING PARTS PLEASE PROVIDE THE FOLLOWING INFORMATION:
A. MODEL NUMBER C. PART NUMBER
B. SERIAL NUMBER D. TYPE OF GAS

PARTS LIST: MODELS ORHP-(112, 224, 336, 448)-E-C

ITEM	PART #	DESCRIPTION	LIST	ITEM	PART #	DESCRIPTION	LIST
1	ORSU-E-C-01	TOP GRATE 12 X 12	$96.00	12-A	ORSU-E-C-12A	3/8" ALUM TUBING W/ COMP - 6 BENDS	$32.00
1A	ORSU-E-C-01A	WOK RING TOP	$170.00	13	ORSU-E-C-13	BURNER VALVE WITHOUT ORIFICE	$17.00
4	ORSU-E-C-04	EASY CLEAN BURNER W/ SHORT VENTURI	$50.00	14	ORSU-E-C-14	REGULATOR (NAT)	$36.00
5	ORSU-E-C-05	AIR SHUTTER	$5.00	14A	ORSU-E-C-14A	REGULATOR (LP)	$36.00
6	ORSU-E-C-06	BACK SPLASH SPECIFY MODEL*	?	15	ORSU-E-C-15	MIDDEL PLATE (*SPECIFY MODEL)	?
7	ORSU-E-C-07	LEG	$19.00	17	ORSU-E-C-17	FRONT CAP (* SPECIFY MODEL)	?
9	ORSU-E-C-09	REAR PILOT TUBE W/TIP (SPECIFY SIDE)	$16.00	18	ORSU-E-C-18	FRONT PANEL (* SPECIFY MODEL)	?
9A	ORSU-E-C-09A	FRONT PILOT TUBE W/TIP	$13.00	19	ORSU-E-C-19	VALVE KNOB	$11.00
10	ORSU-E-C-10	PILOT ADJUSTMENT VALVE (DOUBLE)	$14.00	20	ORSU-E-C-20	DRIP TRAY (* SPECIFY MODEL	?
11	ORSU-E-C-11	ORIFICE (NAT)	$4.00	22	ORSU-E-C-22	ORIFICE ELBOW FITTING	$11.00
11A	ORSU-E-C-11A	ORIFICE (LP) '	$4.00	23	ORSU-E-C-23	FEMALE ELBOW FITTING (FOR BURNER VALVE)	$11.00
12	ORSU-E-C12	3/8" ALIM. TUBING W/COMP - 4 BENDS	$32.00				

RANKIN DELUX, INC. MODEL ORSU ORIENTAL STEP UP FLEX SYSTEM

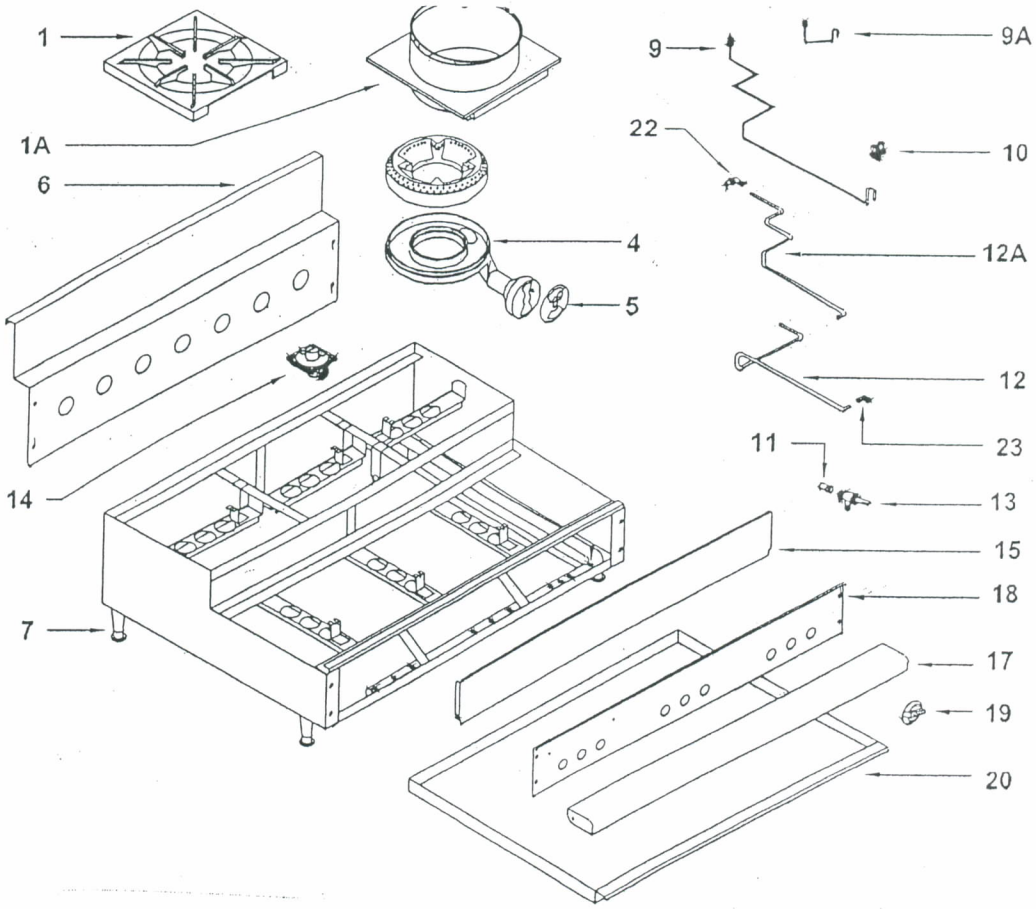

WHEN ORDERING PARTS PLEASE PROVIDE THE FOLLOWING INFORMATION:
A. MODEL NUMBER C. PART NUMBER
B. SERIAL NUMBER D. TYPE OF GAS

ITEM	PART #	DESCRIPTION	LIST	ITEM	PART #	DESCRIPTION	LIST
1	ORSU-212-01	TOP GRATE	$96.00	12	ORSU-212-12	3/8" ALUM TUBING W/COMP	$32.00
1A	ORSU-212-01A	WOK GRATE	$170.00	13	ORSU-212-13	BURNER VALVE WITHOUT ORIFICE	$17.00
2	ORSU-212-02	BURNER HEAD	$66.00	14	ORSU-212-14	REGULATOR (NAT)	$36.00
3	ORSU-212-03	GASKET	$4.00	14A	ORSU-212-14A	REGULATOR (LP)	$36.00
4	ORSU-212-04	VENTURI	$22.00	15	ORSU-212-15	MIDDLE PLATE	$41.00
5	ORSU-212-05	AIR SHUTTER	$5.00	17	ORSU-212-17	FRONT CAP	$20.00
6	ORSU-212-06	BACK SPLASH	$58.00	18	ORSU-212-18	FRONT PANEL	$22.00
7	ORSU-212-07	LEG	$19.00	19	ORSU-212-19	VALVE KNOB	$11.00
9	ORSU-212-09	REAR PILOT TUBE W/TIP	$16.00	20	ORSU-212-20	DRIP TRAY	$46.00
9A	ORSU-212-10	FRONT PILOT TUBE W/TIP	$13.00	22	ORSU-212-22	ORIFICE ELBOW FITTING	$11.00
10	ORSU-212-11	PILOT ADJUSTMENT VALVE (DOUBLE)	$17.00	23	ORSU-212-23	FEMALE ELBOW FITTING (FOR BURNER VALVE	$11.00
11	ORSU-212-11	ORIFICE (NAT)	$4.00				
11A	ORSU-212-11A	ORIFICE (LP)	$4.00				

RANKIN DELUX, INC. MODEL ORSU-212 ORIENTAL STEP UP FLEX SYSTEM

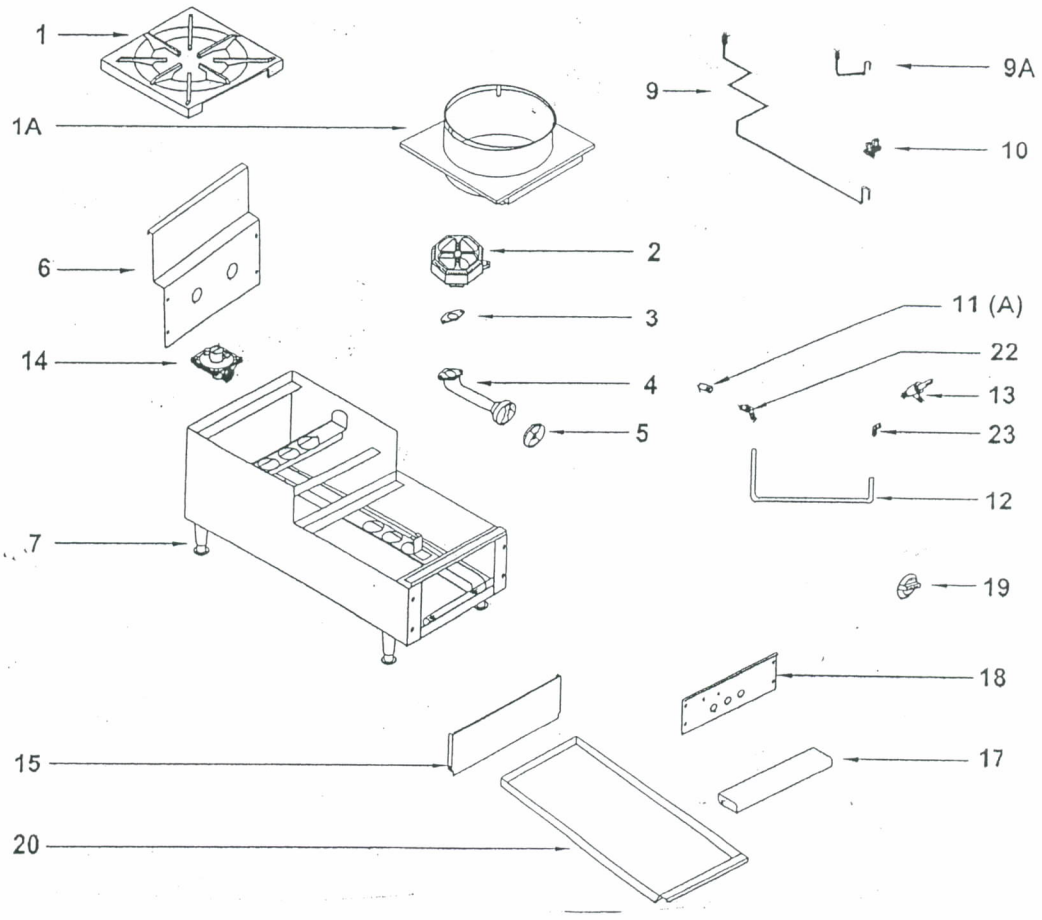

WHEN ORDERING PARTS PLEASE PROVIDE THE FOLLOWING INFORMATION:

A. MODEL NUMBER C. PART NUMBER

B. SERIAL NUMBER D.TYPE OF GAS

PARTS LIST: MODELS ORSU (212 Series Only*)