southbend

A MIDDLEBY COMPANY

IMPORTANT
FOR FUTURE REFERENCE
Please complete this information and retain this manual for the life of the equipment.
MODEL # _____
SERIAL # _____
DATE PURCHASED _____

OWNER'S MANUAL

INSTALLATION
USER'S GUIDE
SERVICE
PARTS

SECTIONAL RANGE FRONT MANIFOLD BATTERY TYPE

(See Section 1, Page 2 for Models)

These instructions should be read thoroughly before attempting installation. Installation and Start Up should be performed by a qualified service technician. The Manufacturer, Southbend (1100 Old Honeycutt Rd., Fuquay-Varina, North Carolina 27526), informs you that unless the installation instructions for the above described Southbend product are followed and performed by a qualified service technician, (a person experienced in and knowledgeable concerning the installation of commercial gas and/or electrical cooking equipment) then the terms and conditions of the Manufacturer's Limited Warranty will be rendered void and no warranty of any kind shall apply.

If the equipment has been changed, altered, modified or repaired by other than a qualified service technician during or after the 12-month limited warranty period, then the manufacturer shall not be liable for any incidental or consequential damages to any person or to any property which may result from the use of the equipment thereafter. Some States do not allow the exclusion or limitation of incidental or consequential damages, so the above limitation or exclusion thereto may not apply to you.

In the event you have any questions concerning the installation, use. care, or service of the product, write Customer Service Department, Southbend, 1100 Old Honeycutt Rd., Fuquay-Varina, North Carolina 27526.

WARNING: Improper installation, adjustment, alteration, service or maintenance can cause property damage, injury or death. Read the installation, operating and maintenance instructions thoroughly before installing or servicing this equipment.

$6.00

SECTIONAL RANGES
(Manual Section SR)

Congratulations! You have just purchased one of the finest pieces of heavy-duty, commercial cooking equipment on the market today.

You will find that your new equipment, like all Southbend equipment, has been designed and manufactured to some of the toughest standards in the industry — those of Southbend Corporation. Each piece of Southbend equipment has been carefully engineered and designs have been verified through laboratory tests and field installations in some of the more strenuous commercial cooking applications. With proper care and field maintenance, you will experience years of reliable, trouble-free operation from your Southbend equipment. To get the best results, it's important that you read this manual carefully.

TABLE OF CONTENTS:

CAUTION: ***POST IN PROMINENT LOCATION INSTRUCTIONS TO BE FOLLOWED IN THE EVENT THE SMELL OF GAS IS DETECTED. THIS INFORMATION SHALL BE OBTAINED FROM LOCAL GAS SUPPLIER.***

RETAIN THIS MANUAL FOR FUTURE REFERENCE.

INTENDED FOR COMMERCIAL USE ONLY. NOT FOR HOUSEHOLD USE.

FOR YOUR SAFETY

DO NOT STORE OR USE GASOLINE OR OTHER FLAMMABLE VAPORS AND LIQUIDS IN THE VICINITY OF THIS OR ANY OTHER APPLIANCE.

KEEP AREA AROUND APPLIANCES FREE AND CLEAR FROM COMBUSTIBLES.

IN THE EVENT A GAS ODOR IS DETECTED, SHUT DOWN EQUIPMENT AT THE MAIN SHUTOFF VALVE AND CONTACT THE LOCAL GAS COMPANY OR GAS SUPPLIER FOR SERVICE.

southbend

A MIDDLEBY COUMHY

1100 Old Honeycutt Road
Fuquay-Varina, NC 27526
(919)552-9161
PAX (919) 552-9798
(800)348-2558

SECTIONAL RANGE
FRONT MANIFOLD BATTERY TYPE
INSTALLATION

SPECIFICATIONS

BASIC UNITS WITH OVENS & CABINET BASES

TOP VIEWS

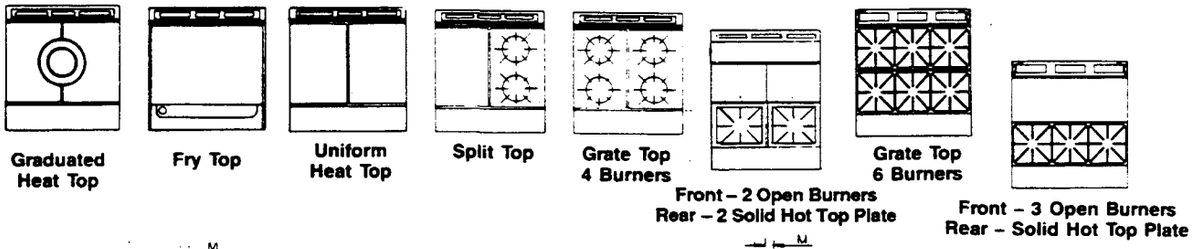

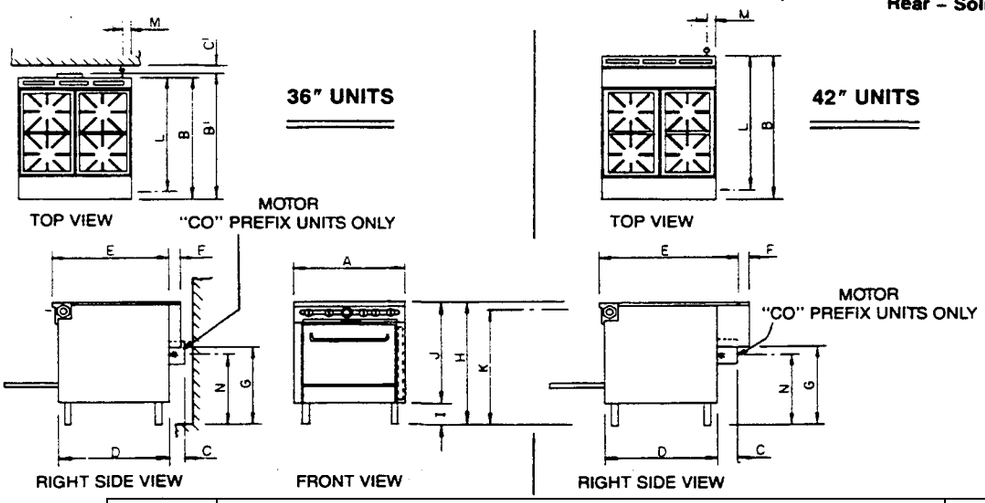

	MODELS	EXTERIOR												1/4" Main		Electric	
		Width A	Depth **B**	Depth B[1]	C	C[1]	D	E	F	G	Total H	I	Ck. Top J	K	L	M	N
36" Deep Standard Oven Unit	1364	32"	36-	-	-	-	3175"	33"	3"	23"	36"	6"	30"	33.75"	33.5"	-	-
36" Deep Convention Oven Unit	CO-1364	32"	36"	37"	4"	2" min	31.75"	33"	3"	23"	36"	6"	30"	33.75"	33.5"	2"	21"
42" Deep Standard Oven Unit	1424	32"	42"	-	-	-	3175"	39"	3"	23"	36"	6"	30"	33.75"	39.5"	-	-
42" Deep Convention Oven Unit	CO-1424	32"	42"	-	4"	-	3175"	39"	3"	23"	36"	6"	30"	33.75"	39.5"	2"	21"

SIDE VIEW TABLE TOP UNITS

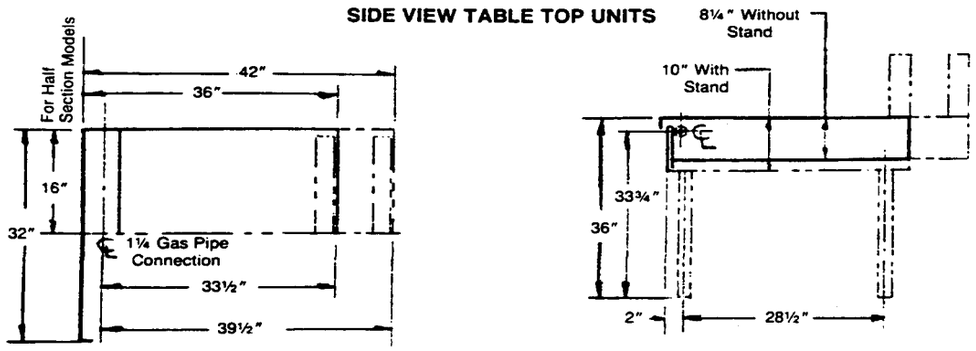

SPECIFICATIONS

Model Number	Description	Model Number
36" UNITS		**42" UNITS**
	RANGES - WITH OVEN	
136C	Graduated Heat Top	142C
1361C	**Fry Top**	**1421C**
1362C	Uniform Heat Top	1422C
1363D	**Grate Top, 6 Burners**	**1423D**
1363DHT	Front 3 Open Burners - Rear 1 Piece Solid Hot Top Plate	1423DHT
1364D	**Grate Top, 4 Burners**	**1424D**
1365C	1/2 Grate Top, 1/2 Uniform Top	1425C
1366C	**1/2 Grate Top, 1/2 Fry Top**	**1426C**
1367C	1/2 Uniform Top, 1/2 Fry Top	1427C
1364DHT	**2 - 1/2 Grate Tops, 2 - 1/2 Uniform Tops**	**1424DHT**
	RANGES - WITH OPEN CABINET BASES	
136C-1	Graduated Heat Top	142C-1
1361C-1	**Fry Top**	**1421C-1**
1362C-1	Uniform Heat Top	1422C-1
1363D-1	**Grate Top, 6 Burners**	**1423D-1**
1363DHT-1	Front 3 Open Burners - Rear 1 Piece Solid Hot Top Plate	1423DHT-1
1364D-1	**Grate Top, 4 Burners**	**1424D-1**
161C-1	Fry Top - Half Section	121C-1
162C-1	**Uniform Heat Top - Half Section**	**122C-1**
164D-1	Grate Top, 2 Burners - Half Section	124D-1
1366C-1	**1/2 Grate Top, 1/2 Fry Top**	**1426C-1**
1367C-1	1/2 Uniform Top, 1/2 Fry Top	1427C-1
1364DHT-1	**2 - 1/2 Grate Tops, 2-1/2 Uniform Tops**	**1424DHT-1**
164DHT-1	1-1/2 Grate Top, 1-1/2 Uniform Top	124DHT-1
163D-1	**2 Burner 12" wide Module, 1363 Match**	
	RANGES - WITHOUT OVEN OR CABINET BASE	
136C-0	Graduated Heat Top	142C-0
1361C-0	**Fry Top**	**1421C-0**
1362C-0	Uniform Heat Top	1422C-0
1363D-0	**Grate Top, 6 Burners**	**1423D-0**
1363DHT-0	Front 3 Open Burners - Rear 1 Piece Solid Hot Top Plate	1423DHT-0
1364C-0	**Grate Top, 4 Burners**	**1424C-0**
161C-0	Fry Top - Half Section	121C-0
162C-0	**Uniform Heat Top - Half Section**	**122C-0**
164D-0	Grate Top, 2 Burners - Half Section	124D-0
1366C-0	**1/2 Grate Top, 1/2 Fry Top**	**1426C-0**
1367C-0	1/2 Uniform Top, 1/2 Fry Top	1427C-0
1364DHT-0	**2 - 1/2 Grate Tops, 2 -1/2 Uniform Tops**	**1424DHT-0**
164DHT-0	1-1/2 Grate Top, 1-1/2 Uniform Top	124DHT-0

(Thermostatic Griddles have T-Prefix)

(Convection-Type Ovens have "CO" Prefix)

INSTALLATION

WARNING: THESE PROCEDURES MUST BE FOLLOWED BY QUALIFIED PERSONNEL OR WARRANTY WILL BE VOIDED.

GENERAL:
The installation must conform with local codes, or in the absence of local codes, with the National Fuel Gas Code, ANSI Z223.1-Latest Edition. In addition, units with the Convection Oven Base must be electrically grounded and comply with local codes, or in the absence of local codes, with the National Electrical Code ANSI/NFPA 70-1987. Canadian installation must comply with CAN/CGA-B149.1 Natural Gas Installation Code, Code CAN/CGA-B 149.2 Propane Installation Code. Canadian Electrical Code Parts I, or Local Codes and CSA C22.1

These models are for operation on Natural or Propane gases.

The appliance should be connected ONLY to the type of gas for which it is equipped. All Southbend equipment is adjusted at the factory. Check type of gas on serial plate in the compartment below the oven.
Each range is a complete unit with an individual 1-1/4" NPT manifold across its entire width. Units can be batteried by joining the unions at the ends of the manifolds. This manifold is not equipped directly with a pressure regulator. However, the manifold must be connected with an adequately sized gas appliance pressure regulator adjusted to supply a pressure to this manifold as marked on the serial plate; 6" W.C. for natural gas and 10" W.C. for propane gas. In addition, the pressure regulator must meet the following requirements:

1. The pressure regulator installed should be certified by a nationally recognized testing agency.
2. The regulator must have a maximum regulation capacity for the total connected load.
3. The regulator must have a pressure adjustment range to allow adjustment to the manifold pressure on the appliance rating plate.
4. Unless the manifold pressure of all connected appliances is the same, a separate regulator must be supplied for each unit(s) to indicate unit or units having differing manifold pressures.
5. If applicable, the vent line from the gas appliance pressure regulator shall be installed to the outdoors in accordance with local codes or, in the absence of local codes, with the National Fuel Gas Code, ANSI Z233.1-1988. Canadian installation must comply with CAN/CGA-B149.1 Natural Gas Installation Code, Code CAN/CGA-B149.2 Propane Installation Code.

An adequate gas supply is imperative. Undersized or low pressure lines restrict the volume of gas required for satisfactory performance. A steady supply pressure, between 7" W.C. and 8" W.C. for natural gas and 11" W.C. and 12" W.C. for propane gas is recommended. With all units operating simultaneously, the manifold pressure on all units should not show any appreciable drop. Fluctuations of more than 25% on natural and 10% on propane gas will create pilot problems and affect burner operating characteristics. Contact your gas company for correct supply line sizes.

As an option, the unit may be supplied with a rear gas connection. The pipe size of this connection is one inch. Unless otherwise specified, this connection is welded to the right side of the manifold.
A 1/8" pressure tap is located on the manifold of each unit.

All pipe joints should be tested for leaks with a soap and water solution before operating the unit. The test pressure should not exceed 14" W.C.

CAUTION: *THIS APPLIANCE AND ITS INDIVIDUAL SHUTOFF VALVE MUST BE DISCONNECTED FROM THE GAS SUPPLY PIPING SYSTEM DURING ANY PRESSURE TESTING OF THAT SYSTEM AT TEST PRESSURES IN EXCESS OF 112 PSIG (3.45 KPA).*
THIS APPLIANCE MUST BE ISOLATED FROM THE GAS SUPPLY PIPING SYSTEM BY CLOSING ITS INDIVIDUAL MANUAL SHUTOFF VALVE DURING ANY PRESSURE TESTING OF THE GAS SUPPLY PIPING SYSTEM AT TEST PRESSURES EQUAL TO OR LESS THAN 112 PSIG (3.45 KPA).

EXHAUST FANS AND CANOPIES:

Be sure to inspect and clean ventilation system according to the ventilation equipment manufacturers instructions. Canopies are set over ranges, ovens, etc., for ventilation purposes. It is recommended that a canopy extend 6" past appliance and be located 6'6" from the floor. Filters should be installed at an angle of 45 degrees or more with the horizontal. This prevents dripping grease and facilities collecting the run-off grease in a drip pan, usually installed with a filter. A strong exhaust fan tends to created a vacuum in the room and may interfere with burner performance or may extinguish pilot flames. Fresh air openings approximately equal to the fan area will relieve such vacuum. In case of unsatisfactory performance on any appliance, check with the exhaust fan in the "OFF" position.

WALL EXHAUST FAN:
Should be installed at least two feet above the vent opening at the top of the shelter backsplash.

INSTALLATION

NOTICE: THERE MUST BE ADEQUATE CLEARANCE BETWEEN UNITS AND COMBUSTIBLE CONSTRUCTION. CLEARANCE MUST ALSO BE PROVIDED FOR SERVICING AND FOR OPERATION.

WARNING: ALL UNITS MUST BE INSTALLED IN SUCH A MANNER THAT THE FLOW OF COMBUSTION AND VENTILATION AIR ARE NOT OBSTRUCTED. PROVISIONS FOR AN ADEQUATE AIR SUPPLY MUST ALSO BE PROVIDED. DO NOT OBSTRUCT THE FRONT OF THE UNIT AT THE TOP BY THE CONTROL PANEL, OR THE BOTTOM JUST BELOW THE OVEN COMPARTMENT, AS COMBUSTION AIR ENTERS THROUGH THESE AREAS.

MINIMUM CLEARANCES FROM COMBUSTIBLE CONSTRUCTION ARE:

MODEL TYPE	SIDES	REAR
FRY TOP	10 IN.	6 IN.
SPLIT TOP UNIFORM TOP	6 IN. LEFT 8 IN. RIGHT	6 IN.
6 BURNER OPEN TOP	9 IN.	6 IN.
3 BURNER OPEN TOP 3 BURNER HOT TOP (REAR)	9 IN.	6 IN.
4 BURNER OPEN TOP	6 IN.	6 IN.
2 BURNER OPEN TOP 2 BURNER HOT TOP (REAR)	6 IN.	6 IN.
GRADUATED HEAT TOP	6 IN.	6 IN.

WARNING: ON UNITS WITH THE CONVECTION-TYPE OVEN, A MINIMUM CLEARANCE OF TWO INCHES MUST BE ALLOWED BEHIND THE MOTOR AND ANY REAR NON-COMBUSTIBLE ENCLOSURE. CARE MUST BE TAKEN TO PROVIDE ADEQUATE AIR CIRCULATION TO PREVENT THE MOTOR FROM OVERHEATING. NO ADDITIONAL CLEARANCE FROM THE SIDES AND BACK IS REQUIRED FOR SERVICE AS THE UNITS ARE SERVICEABLE FROM THE FRONT.

LEGS OR OPTIONAL CASTERS:

1. A set of legs or casters are packed in the unit. A threaded receptacle is fastened to the base frame at each comer. Each leg or caster has a similar mating thread.
2. Casters with locking brake are to be installed on front of unit.
3. Raise unit sufficiently to allow legs or casters to be screwed into the receptacles. For safety, "shore up" and support the unit with an adequate blocking arrangement strong enough to support the load.
4. Lower unit gently. Never drop or allow the unit to fall.
5. The legs or casters can be adjusted to overcome an uneven floor
6. After the unit has been leveled, tighten the lock nuts.
7. Casters are provided with a zerk fitting for lubrication.

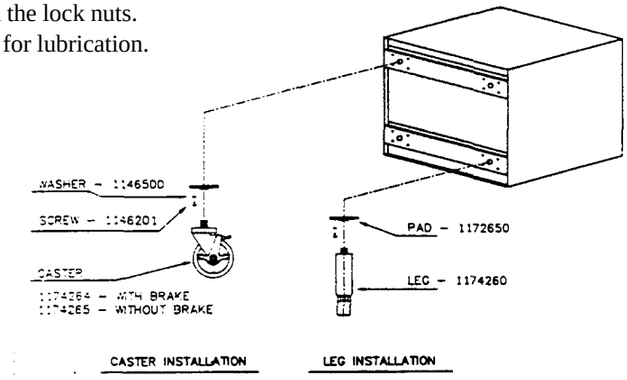

INSTALLATION

WARNING:

FOR AN APPLIANCE EQUIPPED WITH CASTERS, THE INSTALLATION SHALL BE MADE WITH A CONNECTOR THAT COMPLIES WITH THE STANDARD FOR CONNECTORS FOR MOVABLE GAS APPLIANCES, ANSI Z21.69-1987, CAN1 6.10-88 AND A QUICK-DISCONNECT DEVICE THAT COMPLIES WITH THE STANDARD FOR QUICK-DISCONNECT DEVICES FOR USE WITH GAS FUEL, ANSI Z21.41-1978, AND ADDENDA, Z21.41a-1981, Z21.41b.l983 AND CAN1 6.9 M79. ADEQUATE MEANS MUST BE PROVIDED TO LIMIT THE MOVEMENT OF THE APPLIANCE WITHOUT DEPENDING ON THE CONNECTOR AND THE QUICK-DISCONNECT DEVICE OR ITS ASSOCIATED PIPING TO LIMIT THE APPLIANCE MOVEMENT.

WARNING:

***IF* DISCONNECTION OF THIS RESTRAINT IS NECESSARY TO REMOVE THE APPLIANCE FOR CLEANING, ETC., RECONNECT IT WHEN THE APPLIANCE IS MOVED TO ITS ORIGINALLY INSTALLED POSITION.**

GAS CONNECTION:

On all threaded connections the pipe joint compound must be approved for used with natural and LP gas.

I. INDIVIDUAL UNITS:

1. Remove valve panel.

2. Use a long spirit level four ways; across the front top rail and rear collar plate, and along each edge.

3. A. For units without a rear gas connections connect the gas supply to the right or left side of the manifold. Be sure to cap the unused side

   B. For units with a rear gas connection the gas supply to the unit will be made at the right rear. Be certain both ends of the manifold are capped.

4. Turn off all burner valves.

5. Turn on gas supply and immediately check all gas connections for leaks. Use soapy water only. Never use an open flame.

6. Put valve panel back onto the unit.

7. Proceed to "MOUNTING SHELF OR BACKSPLASH INSTALLATION INSTRUCTIONS," if applicable.

INSTALLATION

ELECTRICAL CONNECTIONS:

I. CONVECTION-TYPE OVENS:

A. **115V - 60 HZ - SINGLE PHASE**

Ovens with this electrical rating are factory supplied with a three-wire cord and a three-prong plug which fits any standard three-prong grounded receptacle.

WARNING:

THE THREE-PRONG (GROUNDING) PLUG IS SUPPLIED FOR YOUR PROTECTION AGAINST SHOCK HAZARD AND MUST BE ELECTRICALLY GROUNDED IN ACCORDANCE WITH LOCAL CODES, OR IN THE ABSENCE OF LOCAL CODES, WITH THE NATIONAL ELECTRICAL CODE. ANSI/NFPA 70-LATEST EDITION. DO NOT CUT OR REMOVE THE GROUNDING PRONG FROM THIS PLUG.

B. **208/236V - 60 HZ - SINGLE OR THREE PHASE**

Ovens with this electrical rating are factory equipped with a 2-pole terminal block located behind the rear access plate located at the rear of the unit (see Diagram 3). To connect the supply wires, remove the rear access plate. Route the supply wires and the grounding wire through the strain relief fitting to the terminal block. Insert the supply wires, one each, into the two poles of the terminal block and tighten the screws. Insert the ground wire into the grounding lug and tighten the screw. Re-attach the access plate.

Three phase units are wired as above, using only two supply wires. The third wire is not used and must be properly terminated.

ASSEMBLY OF BATTERY:

1. Position the center range of the battery and carefully level unit. Use a long spirit level four ways; across front top rail and the rear collar plate, and along each edge.
2. Remove all valve panels. Mark, so they will be returned to their respective unit.
3. Bring up adjacent units, level by same method and by using the center unit as reference. Match front rails and rear collar plates. When battery is set on a masonry base and legs are not used, shims may be used. Special attention should be given to Fry Top ranges to allow proper drainage on griddles.
4. Where Spreader Plates are installed, refer to Sectional Battery Component Assembly Instructions supplied with each unit.
5. Connect units together by mating the unions. Make unions just HAND TIGHT at this time.
6. Starting at the center and working toward the ends, tighten each union gradually, going from one to another, until all are finally tight. A special thin wrench, which fits the union nut, is provided with each battery, or a chain wrench can be used.
7. Connect gas supply at right, left, or both ends. When a Spreader Plate with a "Tee" connection is inserted in a battery, the gas supply may be connected at this point. Ranges with rear connections may also be used in this respect. If five or more units are batteried, more than one supply line should be used. Each supply line should have a readily accessible, approved hand shutoff valve.
8. "Open" ends of the manifold must be capped.
9. Turn off all burner valves.
10. Turn on gas supply and immediately check all the unions for leaks. USE SOAPY WATER ONLY FOR TESTING ON ALL GASES. NEVER USE AN OPEN FLAME TO CHECK FOR GAS LEAKS.
11. When entire gas system has been proved, turn off gas supply during additional installation.
12. A filler to cover the "gap" between the range fronts and tops is provided. Refer to Sectional Battery Component Assembly Instructions supplied with each unit.

MOUNTING SHELF OR BACKSPLASH INSTALLATION INSTRUCTIONS

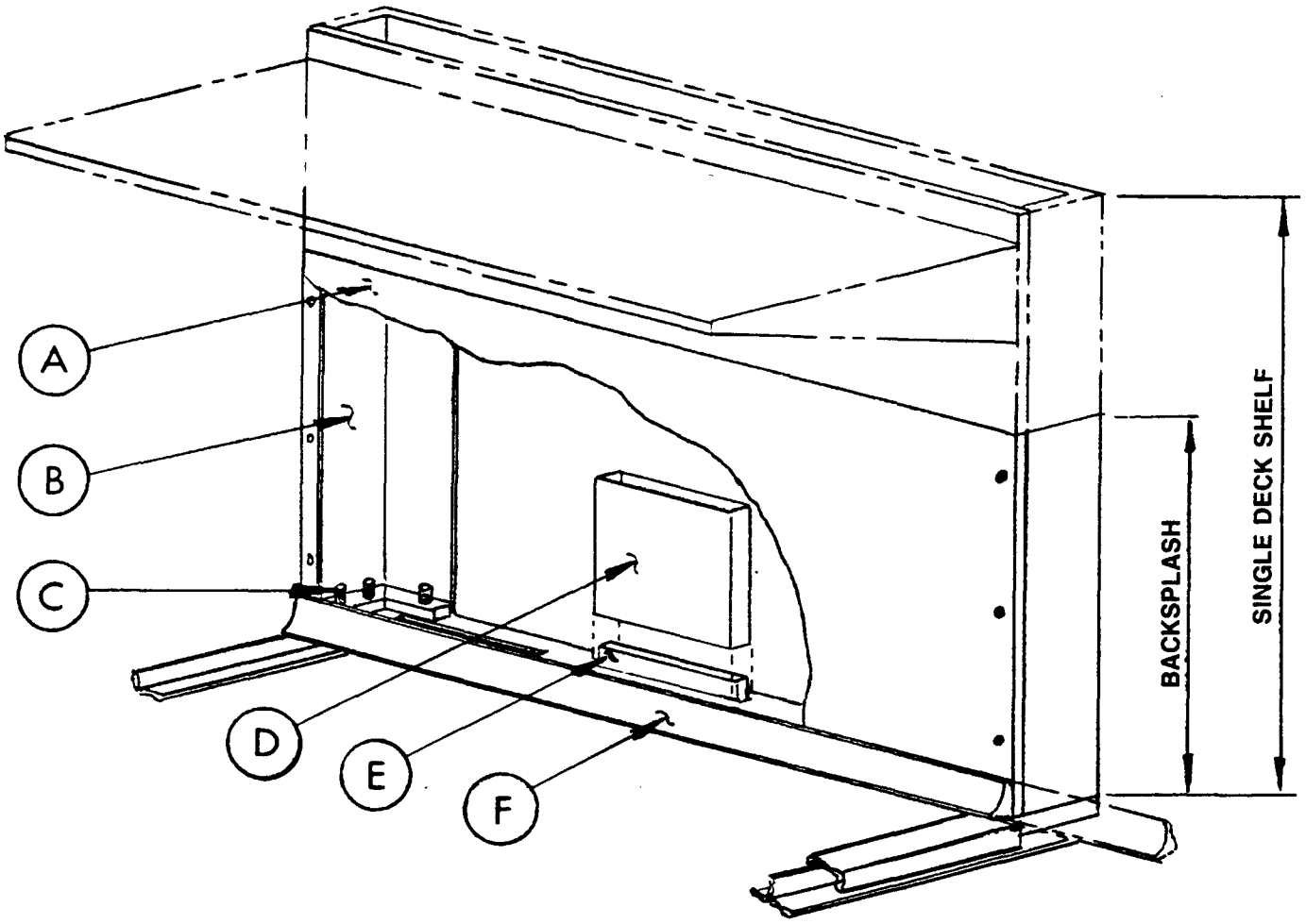

Fig. 1

1. Front panel "A" is fastened with six (6) sheet metal screws. Remove screws and panel will come loose.

2. Remove nuts and lock washers from collar plate studs "C" on unit.

3. Lower the shelf (or backsplash) on to unit allowing studs "C" to enter holes in the shelf bracket. Secure shelf bracket "B" with nuts and lock washers that were removed in instruction No. 2.

4. The flue riser extension "D" is packed with unit. Slide flue riser extension over the flue "E" protruding through the center opening of the collar plate "F". Replace panel "A". On models where flue "E" extends above collar plate approximately 4" flue extension "D" is not required.

INSTALLATION

FRONT FILLER MOUNTING PROCEDURE

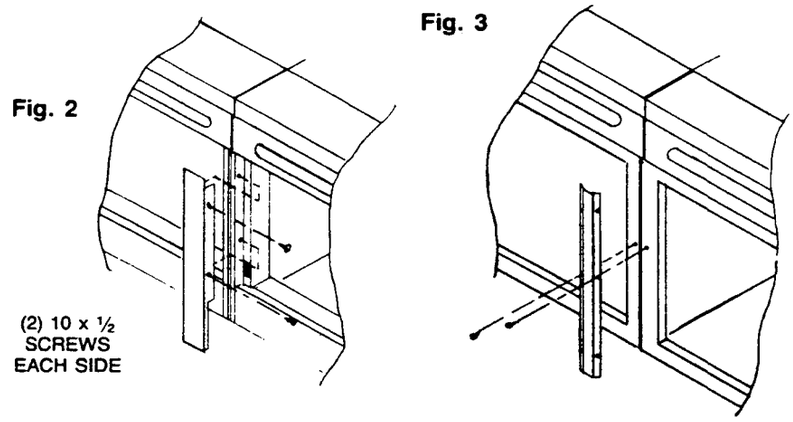

FIG. 2 - U-TYPE FRONT FILLER

APPLICATION: Standard Oven Base Unit batteried to Standard Oven Base Unit.
(#1695 Black, #1695SS Stainless Steel)

APPLICATION: Standard Oven Base Unit on the left batteried to a Convection Oven Base Unit on the right.
(#1166956 Black, #1166957 Stainless Steel)

MOUNTING PROCEDURE:

If mounting holes are pre-drilled, remove screws, attach filler and secure with same screws. If mounting holes are not pre-drilled, or if pre-drilled holes do not align properly, drill holes using an 11/64" (.171 dia.) drill and secure with *#10* x 1/2 slotted truss head sheet metal screws.

FIG. 3 - FLAT-TYPE FRONT FILLER
(#1692 Black, #1692SS Stainless Steel)

APPLICATION: Fryer or Cabinet Base Unit battened to a Fryer or Cabinet Based Unit.

MOUNTING PROCEDURE:

Align filler equally spaced over each unit. Drill securing holes with a *#38* drill, using pre-punched holes in filler as a guide and secure with *#4* x % sheet metal screws.

WARNING:

TUBULAR GAS LINES ARE LOCATED ON THE LEFT SIDE OF THE STANDARD OVEN BASE UNITS BEHIND THE FILLER SECURING SCREW AREA. IF HOLES NEED TO BE DRILLED, CARE MUST BE TAKEN AND INSPECTION MADE TO INSURE GAS LINES ARE NOT PUNCTURED.

Fig. 4

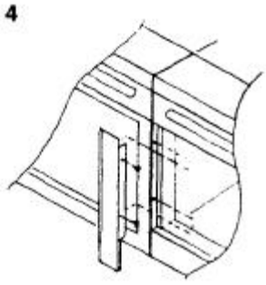

Fig. 5

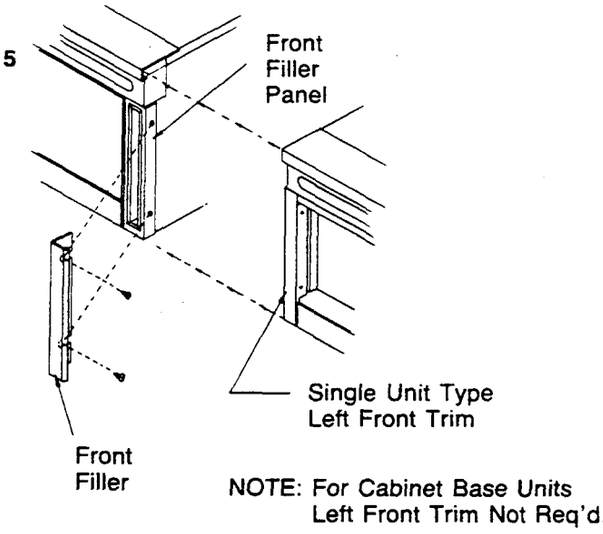

FIG. 4 - L-TYPE FRONT FILLER

APPLICATION: Fryer or Cabinet Base Unit batteried with a Standard Oven Base Unit. (#1146101 Black, #1146103 Stainless Steel for Oven Base Unit on Right) (#1146100 Black, #1146102 Stainless Steel for Oven Base Unit on Left)

APPLICATION: Fryer or Cabinet Base Unit on the Left batteried with a Convection Oven Base Unit on the Right. (#1167010 Black, #1167011 Stainless Steel)

MOUNTING PROCEDURE:

If mounting holes are pre-drilled, remove screws, attach filler and secure with same screws. If mounting holes are not pre-drilled, or if pre-drilled holes do not align properly, drill holes using an 11/64" (.171 dia.) drill and secure with *#10 x* 1/2 slotted truss head sheet metal screws.

FIG. 5 - L-TYPE FRONT FILLER

(#1166951 Black, #1166952 Stainless Steel for Convection Oven Base Unit on left)

APPLICATION: Convection Oven Base Unit on left and any Unit on right.

MOUNTING PROCEDURE:

1. RIGHT SIDE OF THE CONVECTION OVEN BASE UNIT AT CONTROL PANEL - Loosen the two screws on the right side of the front filler panel. Align the two slots in the front filler with the two screws. Push filler in until it is flush with the front of the front filler panel and retighten the two screws.

2. For Standard Oven Base Units and Convection Oven Base Units being batteried against the Convection Oven Base Unit right side, the factory will supply the single unit type left front trim. P/N 1136006 Black and 1136007 Stainless Steel for Standard Sectional Units and P/N 1166809 Black and 1166810 Stainless Steel for Convection Oven Sectional Units.

3. Slide adjacent unit up against Convection Oven Sectional and forward up against front filler.

WARNING:

TUBULAR GAS LINES ARE LOCATED ON THE LEFT SIDE OF THE STANDARD OVEN BASE UNITS BEHIND THE FILLER SECURING SCREW AREA. IF HOLES NEED TO BE DRILLED, CARE MUST BE TAKEN AND INSPECTION MADE TO INSURE GAS LINES ARE NOT PUNCTURED.

INSTALLATION

END TRIM MOUNTING PROCEDURE (Fig. 6)

Fig. 6

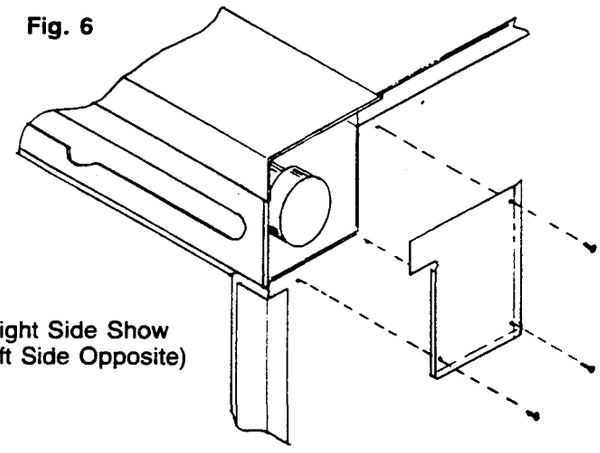

APPLICATION: Sectional Battery Units with Capped Manifold.
(#1072501 Black, #1072503 Stainless Steel Left End Trim)
(#1072500 Black, #1072502 Stainless Steel Right End Trim)
(#1073399 End Pipe Cap)

NOTE: Sectional type units are normally shipped with requested optional end trim attached to body side.

1. Position end trim to the underside of the front rail, tight against front and top.
2. Using the pre-punched holes in the end trim as a guide, drill (3) 1/8" (.125 dia.) holes and secure with (3) *#8 x* 1/2 sheet metal screws.

WARNING:

TUBULAR GAS LINES ARE LOCATED ON THE SIDES OF THE OVEN BASE UNITS BEHIND THE END TRIM SECURING SCREW AREA. IF HOLES NEED TO BE DRILLED, CARE MUST BE TAKEN AND INSPECTION MADE TO INSURE THAT GAS LINES ARE NOT PUNCTURED.

NOTE: Fryers, Spreader Cabinets, Half Section Ranges and right side of Convection Oven Base Ranges are finished and do not require fillers when installed at outer ends of batteries.

INSTALLATION

TOP FILLERS FOR BATTERY INSTALLATIONS

Slip-on filler will be supplied to seal unit top to unit top in case of spillage.

Types of fillers supplied will be:

Range to Range
Range to Fryer
Fry Top Range to Fryer
Fryer to Fryer
Fryer to Drain Cabinet
Range to Drain Cabinet
Fry Top Range to Drain Cabinet
Range to Battery Type Broiler
Fryer to Battery Type Broiler
Drain Cabinet to Battery Type Broiler
Drain Cabinet to Drain Cabinet

Top fillers, except "U" channel range to range filler will be labeled to identify adjoining unit usage.

PART NUMBER	UNIT ON LEFT	UNIT ON RIGHT
1165435	ANY RANGE	ANY RANGE
1165277	ANY RANGE (except Pry Top)	14" POT FRYER
1165278	14" POT FRYER	ANY RANGE (except Fry Top)
1165275	ANY RANGE (except Fry Top)	18" POT FRYER
1165276	18" POT FRYER	ANY RANGE (except Fry Top)
1164484	BROILER OR FRY TOP RANGE OR CB	14" POT FRYER
1164485	14" POT FRYER	BROILER OR FRY TOP RANGE OR CB
1164487	BROILER OR FRY TOP RANGE OR CB	18" POT FRYER
1164486	18" POT FRYER	BROILER OR FRY TOP RANGE OR CB
1165280	14" POT FRYER	14" POT FRYER
1165279	18" POT FRYER	18" POT FRYER
1165269	14" POT FRYER	18" POT FRYER
1165270	18" POT FRYER	14" POT FRYER
1165267	DRAIN CABINET	14" POT FRYER
1165268	14" POT FRYER	DRAIN CABINET
1165271	DRAIN CABINET	18" POT FRYER
1165272	18" POT FRYER	DRAIN CABINET
1165266	ANY RANGE (except Fry Top)	DRAIN CABINET (w/14" Fryer on Right of it)
1165265	DRAIN CABINET (w/14" Fryer on Left of it)	ANY RANGE (except Fry Top)
1165274	ANY RANGE (except Fry Top)	DRAIN CABINET (w/18" Fryer on Right of it)
1165273	DRAIN CABINET (w/18" Fryer on Left of it)	ANY RANGE (except Fry Top)
1164492	BROILER OR FRY TOP RANGE OR CB	DRAIN CABINET
1164491	DRAIN CABINET	BROILER OR FRY TOP RANGE OR CB
1164488	32B OR 32-40 BROILER	ANY RANGE
1164489	ANY RANGE	32B OR 32-40 BROILER
1164490	ANY RANGE & 171-40 BROILER OR CB	ANY RANGE & 171-40 BROILER OR CB
1165297	DRAIN CABINET	DRAIN CABINET

NOTE: Range denotes any standard top (unless otherwise stated) including Oven Bases, Cabinet Bases and Table Top.
NOTE: Top Fillers are not furnished for Spreader Plates or Spreader Cabinets.

SECTIONAL RANGE
FRONT MANIFOLD BATTERY TYPE
USER'S GUIDE

LIMITED WARRANTY

Southbend warrants that the equipment, as supplied by the factory to the original purchasers, is free from defects in materials and workmanship. Should any part thereof become defective as a result of normal use within the period and limits defined below, then at the option of Southbend such parts will be repaired or replaced by Southbend or its Authorized Service Agency. This warranty is subject to the following conditions:

If upon inspection by Southbend or its Authorized Service Agency it is determined that this equipment has not been used in an appropriate manner, has been modified, has not been properly maintained, or has been subject to misuse or misapplication, neglect, abuse, accident, damage during transit or delivery, fire, flood, riot or Act of God, then this warranty shall be void.

Specifically excluded under this warranty are claims relating to installation; examples are improper utility connections and improper utilities supply. Claims relating to normal care and maintenance are also excluded; examples are calibration of controls, and adjustments to pilots and burners.

Equipment failure caused by inadequate water quality is not covered under warranty. WATER QUALITY must not exceed the following limits: Total Dissolved Solids (TDS) - 60 PPM (Parts Per Million). Hardness - 2 Grains or 35 PPM, PH Factor - 7.0 to 7.5. Water pressure 30 PSI minimum, 60 PSI maximum. Boiler maintenance is the responsibility of the owner and is not covered by warranty.

This equipment is intended for commercial use only. Warranty is void if equipment is installed in other than commercial application.

Repairs under this warranty are to be performed only by a Southbend Authorized Service Agency. Southbend can not be responsible for charges incurred from other than Authorized Southbend Agencies.
THIS WARRANTY MUST BE SHOWN TO AN AUTHORIZED SERVICE AGENCY WHEN REQUESTING IN-WARRANTY SERVICE WORK. THE AUTHORIZED SERVICE AGENCY MAY AT HIS OPTION REOUIRE PROOF OF PURCHASE.
This warranty does not cover services performed at overtime or premium labor rates nor does Southbend assume any liability for extended delays in replacing or repairing any items in the equipment beyond the control of Southbend. "Southbend shall not be liable for consequential or special damages of any nature that may arise in connection with such product or part." Should service be required at times which normally involve overtime or premium labor rates, the owner shall be charged for the difference between normal service rates and such premium rates.
In all circumstances, a maximum of one hundred miles in travel and two and one half hours (2.5) travel time shall be allowable.
In all cases the closest Southbend Authorized Agency must be used.

The actual warranty time periods and exceptions are as follows: -

This warranty only covers product shipped into the 48 contiguous United States and Hawaii, one year labor, one year parts effective from the date of original purchase. There will be no labor coverage for equipment located on any island not connected by roadway to the mainland.

Exceptions to standard warranty, effective within above limitations:
Glass Windows, Door Gaskets, Rubber Seals, Light Bulbs, Ceramic Bricks,
Sight Glasses, Cathodic Descalers or Anodes .....90 days material and labor

Stainless Steel Fry Pot ..... 4 years extended material warranty on fry pot only — no labor

Stainless Steel Open Top Burners .....4 years extended material warranty on burners only — no labor

Pressure Steam Boiler Shell ..... Prorated 4 years extended warranty on boiler shell only — no labor

Boiler shells which have not been properly maintained will not be covered by warranty.

In all cases parts covered by a five year warranty will be shipped FOB the factory after the first year.

Our warranty on all replacement parts which are replaced in the field by our Authorized Service Agencies will be limited to three months on labor, six months on materials (parts) effective from the date of installation. See LIMITED WARRANTY - REPLACEMENT PARTS for conditions and limitations.
If the equipment has been changed, altered, modified or repaired by other than a qualified service technician during or after the one year limited warranty period, then the manufacturer shall not be liable for any damages to any person or to any property which may result from the use of the equipment thereafter.
"THE FOREGOING WARRANTY IS IN LIEU OF ANY AND ALL OTHER WARRANTIES EXPRESSED OR IMPLIED INCLUDING ANY IMPLIED WARRANTY OF MERCHANTABILITY OR FITNESS, AND CONSTITUTES THE ENTIRE LIABILITY OF SOUTHBEND. IN NO EVENT DOES THE LIMITED WARRANTY EXTEND BEYOND THE DURATION OF ONE YEAR FROM THE EFFECTIVE DATE OF SAID WARRANTY."

WARNING:

FOR AN APPLIANCE EQUIPPED WITH CASTERS, THE INSTALLATION SHALL BE MADE WITH A CONNECTOR THAT COMPLIES WITH THE STANDARD FOR CONNECTORS FOR MOVABLE GAS APPLIANCES, ANSI Z21.69-1987, CAN1 6.10-88 AND A QUICK-DISCONNECT DEVICE THAT COMPLIES WITH THE STANDARD FOR QUICK-DISCONNECT DEVICES FOR USE WITH GAS FUEL, ANSI Z21.41-1978, AND ADDENDA, Z21.41a.l981, Z21.41b.l983 AND CAN1 6.9 M79. ADEQUATE MEANS MUST BE PROVIDED TO LIMIT THE MOVEMENT OF THE APPLIANCE WITHOUT DEPENDING ON THE CONNECTOR AND THE QUICK-DISCONNECT DEVICE OR ITS ASSOCIATED PIPING TO LIMIT THE APPLIANCE MOVEMENT.

WARNING:

IF DISCONNECTION OF THIS RESTRAINT IS NECESSARY TO REMOVE THE APPLIANCE FOR CLEANING, ETC., RECONNECT IT WHEN THE APPLIANCE IS MOVED TO ITS ORIGINALLY INSTALLED POSITION.

Before turning main gas supply on, make sure all control valves are in the "OFF" position.

All units are adjusted at the factory. On new installations start with the top burner of the unit(s) furthest from the gas input to the manifold. This will purge the system of air. Turn gas supply "ON."

STANDARD-TYPE OVEN:

1. Open door, raise hold-down clips and remove oven bottom so burner is visible.
2. Turn oven burner to OFF.
3. Removel panel from spring compartment below oven door.
4. Depress RED button on safety valve and light pilot. New installations may require time to bleed air from system before pilot will become steady. The pilot flame should impinge on the bulb to cause it to glow red. If flame is too long and soft, bulb may be in "hollow" part of flame and will not glow.
5. Hold red button allowing pilot to burn approximately 45 seconds, until tip of bulb glows red, and then release button.

   If pilot does not remain ignited, wait 5 minutes and repeat procedure.

   NOTE: The lighting procedure is also printed on a plate attached to the front of the spring compartment cover.
6. Once pilot holds when button is released, set thermostat dial to maximum and turn ON the oven valve at manifold.
7. Burner flames should be 3/4" to 1" long.
8. Reduce thermostat setting slowly until by-pass seat in thermostat just snaps OFF.

   Immediately reverse rotation and turn dial counterclockwise until by-pass snaps open.

   The by-pass flame should be 1/8" minimum and 1/4" maximum on each port.

   A small fluttering by-pass flame may flash back into the burner and ignite on the orifice when the door is quickly opened and closed. This will create a carbon deposit inside the burners which impedes proper primary air injection.
9. Check entire oven gas system for leaks.
10. Replace oven bottom and be sure hold-down clips are lowered to keep bottom in place and prevent warping. Replace spring compartment panel.

For daily shutdown turn main oven valve OFF. For complete oven shutdown turn main oven valve OFF and extinguish oven pilot

CONVECTION-TYPE OVEN:

WARNING:

FOR AN APPLIANCE EQUIPPED WITH A CONVECTION TYPE OVEN, NO ATTEMPT SHOULD BE MADE TO OPERATE OVEN DURING A POWER FAILURE.

A. **CONTROL PANEL EXPLANATION (SEE DIAGRAM 1)**

1. **POWER SWITCH:** In the "ON" position, power is made available to the thermostat, the pilot line solenoid and the pilot spark igniter.
2. **FAN SWITCH:** The fan switch controls the blower operation; it must be "ON" during baking or cooking periods. In the "BAKE" position, the fan runs continuously, except when the doors are open. This position is for baking or cooking. In the "COOL" position, the fan runs continuously, even when the doors are open. This position is for cooling the oven at the end of a work period.
3. **THERMOSTAT AND COOKING LIGHT:** The thermostat, by allowing power to the main gas solenoid, controls the oven temperature. Setting the thermostat at a temperature greater than the oven temperature, energizes the cooking light and the oven burner. Once the oven temperature is equal to or greater than the thermostat setting, both the cooking light and the oven burner will shut off.
4. **FUSES:** The motor and control circuitry are protected with 15 AMP fuses. One fuse is required for 115V and two fuses are required for 208/236V.
5. **ADDITIONAL UNIT CONTROLS:** For long life of the control box controls, a cooling blower has been incorporated into the design. This cooling blower, which is located within the right body side at the rear is activated when the temperature inside of the box housing the controls reaches 150 degrees F at its sensing point. It will run continuously until the temperature inside of the control box drops to 135 degrees F. The cooling blower operates independent of the power switch, therefore, eliminating any control damaging residual heat rise after the unit has been completely shut down. For further protection of the control box controls if the cooling blower should happen to fail, the oven burner and the oven circulating blower motor will shut down when the temperature inside the box housing the controls reaches 225 °F at its sensing point. Refer to "TROUBLESHOOTING," Section 3, Page 7.

TO LIGHT CONVECTION OVENS ON SECTIONAL FRONT MANIFOLD UNITS:

Your oven has electronic ignition. NO MATCHES required!

1. Locate OVEN knob (#1) over oven door. Turn left to "ON" position. This position may change depending on model.
2. Locate COOK TEMP thermostat dial *(#2)* on control panel to the right of oven. Turn to desired cook temperature.
3. Locate POWER switch ((#3) at top of control panel. Press right side to "ON." Fan and red COOKING light *(#5)* will come on.
4. Locate FAN switch (#4) on control panel. Press right side to "BAKE." Red COOKING light *(#5)* will remain on until cooking temperature is reached.

NOTE: If oven does not light, see Section Two, Page 4, Paragraph C, of this manual.

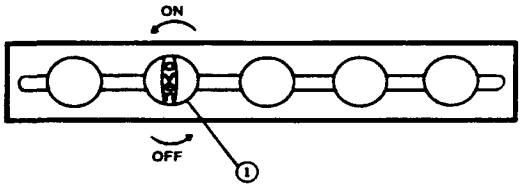

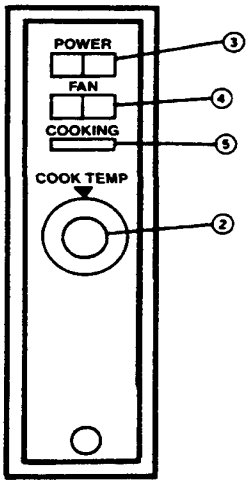

FOR FAST OVEN COOL DOWN:

1. Turn COOK TEMP thermostat dial *(#2) to* desired lower temperature.
2. Press left side of FAN switch (#4) to "COOL."
3. Hold oven door partially open for several seconds. Close oven door. COOKING light *(#5)* will remain on until new temperature is reached.

TO TURN OVEN OFF:

1. Press left side of POWER switch *(#3) to* "OFF."
2. Turn COOK TEMP thermostat dial *(#2) to* "OFF."
3. Turn OVEN knob (#1) over oven door right to "OFF" position.

OPERATION

B. **GAS CONTROL INSTRUCTIONS -** All Sectional Ranges with the optional direct-fired convection oven are equipped, as standard, with electronic ignition for lighting the standing pilot. The standing pilot, therefore, does not require lighting by a match.

1. **LIGHTING**

NOTE: Before attempting lighting of the standing pilot make sure the oven gas supply line shutoff valve is in the open position.

NOTE: The following lighting instructions are also printed on a plate located on the front panel below the oven door.

To light the standing pilot, press the power switch to the "ON" position. Gas will immediately begin to flow to the pilot and simultaneously, the electronic ignition will begin sparking at the pilot (an audible clicking noise should be evident). When the pilot is ignited, the sparking and clicking noise should stop (this may be several minutes, particularly in new installations where the gas lines may have a considerable amount of air). Within 30 to 60 seconds after the pilot is ignited, the flame switch bulb will be heated sufficiently to allow the main gas solenoid to open and the oven burner to light when the thermostat is turned on.

It should be noted that the standing pilot and the electronic ignition do not cycle with the thermostat. The standing pilot is automatically established and monitored each time the power switch is on. If the pilot is ever extinguished by a momentary external interruption, the spark igniter will automatically relight it without disturbing the cooking cycle.

WARNING:

IN THE EVENT OF MAIN BURNER IGNITION FAILURE, A 5 MINUTE PURGE PERIOD MUST BE OBSERVED PRIOR TO RE-ESTABISHING THE IGNITION SOURCE. IN THE EVENT A GAS ODOR IS DETECTED, SHUT DOWN EQUIPMENT AT THE MAIN SHUTOFF VALVE AND CONTACT THE LOCAL GAS COMPANY OR GAS SUPPLIER FOR SERVICE.

2. **STANDBY SHUTDOWN:** Place the power switch in the "OFF" position.
3. **COMPLETE SHUTDOWN:** Place the power switch in the "OFF" position and place the oven gas supply line shutoff valve in the closed position.
4. **RELIGHTING:** Place the oven gas supply line shutoff valve in the open position and place the power switch in the "ON" position.

C. **SPARK IGNITER FAILURE —** In the event the spark igniter fails, the unit may still be operated by carefully following these instructions:

1. Turn thermostat to the "OFF" position.
2. Turn power switch to the "OFF" position.
3. WAIT A MINIMUM OF 5 MINUTES BEFORE PROCEEDING.
4. Turn power switch to the "ON" position.
5. Immediately light pilot with a long match.
6. After 30 to 60 seconds, the flame switch will allow the main oven burner gas to flow when the thermostat is turned on.

The pilot will now stay ignited as long as the power switch remains "ON." If the power switch is turned "OFF," repeat the above instructions.

IT IS INTENDED THAT THE OVEN BE OPERATED IN THE ABOVE MANNER ONLY IN EMERGENCY SITUATIONS AND ONLY WHILE IT IS ATTENDED. DO NOT LEAVE THE PILOT LIT OVERNIGHT; SHUT OFF THE POWER SWITCH. A QUALIFIED SERVICEMAN MUST BE CALLED PROMPTLY.

D. **NORMAL OPERATION —** During normal daily operation, it is imperative that the oven fluing hole (2 inch dia.), located at the front of the oven interior top, not be blocked off by any utensil used in the oven.

E. Due to line voltage, gas valve operation and blower motor induced draft, oven will not operate during power failure.

GRADUATED HEAT TOP MODELS

1. Remove center lid of top casting.
2. Light pilot. Pilot flame should be 3/4" long.
3. Turn on main burner. It should burn with a stable flame *1-1/4"* long. Flame height should not extend above top of the plate. Orifice size is fixed and should not be changed.
4. Turn burner valve to low. The simmer flame should be 3/16" high.

UNIFORM HEAT TOP MODELS

1. Remove top plates.
2. Light pilots. Pilots should be 3/4" long.
3. Turn on main burner. It should burn with a stable flame 1/2" to 3/4" long. Flame height should not extend above top of the plate. Orifice size is fixed and should not be changed.
4. Turn burner valve to low. The simmer flame should be a steady 1/8" minimum and 1/4" maximum at each port.

FRY TOP (GRIDDLE) MODELS

1. Raise Fry Top casting approximately 12" by lifting front. Block securely with two 12" long two-by-fours.
2. Light pilots. Pilot flame should be 3/4" long.
3. Main burner flames should be steady, blue flame 1/2" to 5/8" long. Orifice size is fixed and should not be changed.
4. Turn burner valve to low setting. The flame should be a steady 1/8" minimum and 1/4" maximum on each port.
5. Lower griddle into position and observe burner operating characteristics through slots in top area of grease trough.
6. IMPORTANT: For "break-in" of new griddle, see GRIDDLE in Maintenance Section.

THERMOSTAT CONTROL GRIDDLE MODELS

1. Raise griddle at front so it is approximately 8" high and block securely with (2) two-by-fours. Take CARE not to strain capillary tubes by raising griddle too high.
2. The sensing bulbs must be fully inserted into the tubular holders welded to the underside of the griddle.
3. Light pilots. Pilot flame should be 3/4" long.
4. Set thermostat dial to maximum and turn on main valve.
5. Main burner should have 1/2" to 5/8" steady flame. Turn off burner.
6. Lower griddle carefully into position taking extreme care that capillary tubes are coiled into manifold compartment. NEVER leave any part of the capillary tube in the burner compartment.
7. Observe burner flame through slots in grease trough with thermostat dial at maximum for five minutes. Then turn dial to its lowest setting and observe by-pass flame which should be a 1/8" minimum and 1/4" maximum on each port.
8. IMPORTANT: For "break-in" of new griddle, see GRIDDLE in Maintenance Section.
9. Take care that griddle thermostat and oven thermostat dials are put on proper controls. They are marked on center inserts of dial.

GRATE TOP BURNER MODELS

1. Raise grate. Light pilots. Pilot flame should be 1/2" to 5/8" long. Lower grate.
2. Turn valve to HIGH. Flame should be steady blue, and impinge on underside of pot placed on grate.
3. Turn burner valve to LOW. The simmer flame should be a steady 1/8" minimum, 1/4" maximum at each port.

MODELS 1423DHT, 1363DHT, 1364DHT, OR 1424DHT
- COMBINED UNIFORM HEAT TOP & GRATE TOP

Same as Open Top Burners (above) except flame on Hot Top section should be smaller and just touch the underside of the Hot Top plate.

NOTE: All model top section pilots are NOT SAFETY VALVE PILOTS and when OUT, they do NOT INTERRUPT the flow of gas to the burner, consequently, it is the responsibility of the operator to visually check the ignition of the burners immediately after the burner valve has been turned to ON. Should ignition fail after 4 seconds, turn valve off and wait 5 minutes. Check pilot and relight if out before trying again.

COOKING HINTS

COOKING TIPS (Convection-Type Oven):

A. **FROZEN ENTREE PRODUCTS:** Punch holes in lid before heating. Tent lid if product has a tendency to stick, i.e., lasagne or macaroni and cheese. Use manufacturer's convection oven directions for time and temperature or reduce conventional oven temperature 50 degrees for a 6-1/2 size pan load. Some products may cook in 10 to 15 minutes less time than recommended for convection ovens if prepared from frozen in a 6 pan load.

B. **FRUIT PIES:** Use temperature and time from manufacturer's directions for convection ovens for a 12 pie load placed on 3 bun pans.

C. **ROLLS - YEAST:** Use temperature and time recommended by manufacturer for convection ovens for a 3 pan load.

D. **POTATOES - PRE-BLANCHED, FROZEN:** Spread on ungreased bun pans, 3 pans per load. Bake at 400 degrees F, stirring once, for 15 to 18 minutes.

E. **FISH PORTIONS - BREADED, PRE-COOKED:** Use manufacturer's recommended temperature and time for convection oven for a 3 pan load.

F. **POTATOES - BAKING, 8 OZ. SIZE:** Wash and wrap in potato foil. Place 30 potatoes on 18 x 24 bun pan — 3 pans per load. Bake in 400 degree F oven for 1 hour.

G. **TOP ROUND OF BEEF, NO. 168:** Set oven at 250 degrees F. Place trimmed roast on pan. For 14 - 16 pounds: 140 degrees rare - 14 minutes/pound; 150 degrees medium - 16 minutes/pound; 160 degrees well done - 17-1/2 minutes/pound.

USER'S GUIDE

SUGGESTIONS (Convection-Type Oven):

If cakes are dark on the sides and not done in the center	lower oven temperature.
If cake edges are too brown	reduce number of pans or lower oven temperature.
If cakes have light outer color	raise temperature.
If cake settles slightly in the center	bake longer or raise oven temperature slightly. Do not open doors too often for long periods.
If pies have uneven color	reduce number of pies per rack.
If meats are browned and not done in center	lower oven temperature and roast longer.
If meats are well done and not browned.....	raise temperature. Limit amount of moisture.
If cake ripples	overloading pans or batter is too thin.
If there is excessive meat shrinkage.....	lower oven temperature.
If cakes are too coarse	lower oven temperature.

COOKING HINTS

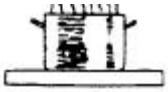

GUIDE TO BAKING TIMES AND TEMPERATURES (Convection-Type Oven):

ORDINARY CONVECTION OVEN OPERATION: As a guide, set oven temperatures 25 to 50 degrees lower than called for in recipes using non-convection ovens, i.e., range or conventional ovens.

Time and temperatures will vary depending upon load, mix, size or portion and other factors. Use this chart to develop your own cooking techniques.

PRODUCT	TIMING/ MIN.	TEMP. SETTING	NO. OF RACKS USED	COUNT PER PAN/RACK
Hamburger buns, 3 oz. - 4"	18	375°	3	24
Yeast rolls - 1 oz.	10	400°	3	48
Fruit pies, 46 oz. frozen	50	375°	3	4
Egg custard pies, 44 oz. frozen	60	325°	3	4
Dutch apple pies, 46 oz., frozen	50	350°	3	4
Baked potatoes, 8 oz.	60	400°	3	30 (wrapped)
Pre-blanched potatoes, frozen	16	400°	3	5 lb.
Fish portions, pre-cooked, breaded, 3 oz.	16	400°	3	32
Macaroni & cheese, 6 lb. - 40° temp.	45	400°	3	2-6 lbs.
Lasagna w/meat sauce, 6 lb. - 40° temp.	60	350°	3	2-6 lbs.
Lasagna w/meat sauce, 6 lb. - frozen	75	350°	3	2-6 lbs.
Salisbury steak w/gravy, 6 lb. - 40° temp.	45	400°	3	2-6 lbs.
Top round of beef No. 168				
14 lb. – rare	140° internal 14 min./lb.	250°	1	1-2
14 lb. – medium	150° internal 16 min./lb.	250°	1	1-2
14 lb. - well done	160° internal 1 7-1/2 min./lb.	250°	1	1-2

WARNING

THE USE OF ALUMINUM FOIL CAN CAUSE HEAT DISTRIBUTION PROBLEMS IN OVENS. EXTREME CARE MUST BE USED WHEN PLACING ALUMINUM FOIL IN THE OVEN TO ENSURE THAT IT DOES NOT BLOCK OR CHANGE THE AIR FLOW. THE USE OF ALUMINUM FOIL MAY VOID THE PRODUCT WARRANTY IF ITS USE IS ASCERTAINED TO BE A PROBLEM.

MAINTENANCE

WARNING:

ADJUSTMENTS AND SERVICE WORK MAY BE PERFORMED ONLY BY A QUALIFIED TECHNICIAN WHO IS EXPERIENCED IN, AND KNOWLEDGEABLE WITH, THE OPERATION OF COMMERCIAL GAS COOKING EQUIPMENT. HOWEVER, TO ASSURE YOUR CONFIDENCE, CONTACT YOUR AUTHORIZED SERVICE AGENCY FOR RELIABLE SERVICE, DEPENDABLE ADVICE OR OTHER ASSISTANCES, AND FOR GENUINE FACTORY PARTS.

Following daily and periodic maintenance procedures will enhance long-life for your equipment. Climatic conditions — salt air— may require more thorough and frequent cleaning, or the life of the equipment could be adversely affected.

MAINTENANCE:

Daily:

A. Wash exposed cleanable ares.
B. Empty ands wash all grease trays.

Monthly:

A. Clean around burner air mixers, carryover tubes, flash tubes and pilots if grease or lint have accumulated.

VENT SYSTEM: At least twice a year the unit venting system should be examined and cleaned.

OVEN INTERIOR (Standard-Type Oven): Allow oven to cool. Remove oven racks and porcelain enameled oven bottom. Clean by rubbing with strong detergent and Brillo pad or similar scrubber. "Spill-over" should be cleaned from the bottom as soon as possible to prevent carbonizing and a "burnt-on" condition. For stubborn accumulations, commercial oven cleaners are recommended.

The porcelain oven door lining can be cleaned in a similar manner. The side, rear and top lining should be wiped only with a cloth dampened with a mild detergent and water. Avoid using excessive amount of water, as this may drip into burner compartment and deteriorate the metal in that area.

Do not use strong commercial cleaners or abrasive pads on these sides, back or top linings.

OVEN INTERIOR (Convection-Type Oven):

CAUTION: *WHENEVER SERVICING OR CLEANING THE OVEN, THE MAIN POWER SUPPLIES TO THE OVEN MUST BE DISCONNECTED.*

Oven bottom and oven door lining are finished with a porcelain enamel coating which encourages frequent cleaning. "Spill-overs" should be cleaned from the bottom or the door lining as soon as possible to prevent carbonizing and a "burnt-on" condition. Usually, a soap or detergent solution is strong enough. For stubborn accumulations, commercial oven cleaners are recommended.

The side, rear and top linings have an aluminized coating and should be cleaned with a sponge or cloth and a mild detergent. Do not use a strong commercial cleaner or abrasive pad, as they may damage the finish.
The rack slides are readily removable for ease in cleaning. To remove, raise them and they will become disengaged from their hanger studs.

Foreign matter may collect on the blades of the blower wheel and reduce the circulation. When this becomes apparent, remove the rear lining which is secured by thumb screws near each corner. Then, use a stiff brush on each blade and finally, wash with soap and water.

WHEN CLEANING THE BLOWER WHEEL, BE SURE TO HAVE THE POWER SWITCH IN THE "OFF" POSITION.

CONTROL PANEL (Convection-Type Oven): The textured control panel should be cleaned with warm water and mild soap. Never use cleaning solvents with a hydrocarbon base.

BURNERS: Little attention is needed, but if spillage should occur, it may be necessary to clean around pilot areas, air mixers and under burners. Use a wire brush if necessary.

MOTOR: Lubrication information can be found on permanent label located on motor.
Periodically, cast iron burners (particularly open top type) should be removed and boiled in a strong solution of washing soda and water. Allow interior to drain, dry thoroughly before replacing.

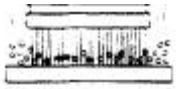

UNIFORM HEAT & GRADUATED HEAT TOPS: Allow range to cool. If water is used on tops while still hot, they may crack. Avoid this practice. Remove tops from range and clean surfaces with hot water and detergent. A wire brush may be used on the underside. It is recommended not to clean tops while still on range even if cooled, as excessive water will drip into the burner box and deteriorate the metal.

GRIDDLES: New griddles should be carefully tempered and maintained to avoid possible cracking and/or warping. To break in a new griddle, first wipe it clean. Next, light all the griddle burners and turn them low for one hour. Then, gradually bring griddle to frying temperature. Next, spread three or four ounces of beef suet or, as a substitute baking soda, to season it. Never allow water on a hot griddle and never wash it with soap and water.

Use a Norton Alundum Griddle Brick to clean griddle. Always remember to heat griddle slowly because quick heat may cause costly damage. Griddle plates cannot be guaranteed against damage due to carelessness. Never place utensils on griddle. Do not overheat griddle above 550°F, as this will cause warpage or breakage.

Do not use any type of steel wool. Small particles may be left on the surface and get into food products.

WARNING:

DO NOT CLEAN SPATULA BY HITTING THE EDGE ON THE GRIDDLE PLATE. SUCH ACTION WILL ONLY CUT AND PIT THE GRIDDLE PLATE, LEAVING IT ROUGH AND HARD TO CLEAN.

Remove, empty, and wash grease container daily, or more often if necessary. Keep griddle drain chute to grease container clear at all times.

OPEN GRATE TOP: Remove grate top castings and clean with a solution of hot water and strong soap or detergent. Use wire brush or abrasive cloth or pads if necessary.

The burner cap (with the drilled ports) can be lifted out and any spillage can be cleaned from the interior of the burner. This center section MUST be replaced before operating the burner.

The area around the charge port where the flash tube is attached to the burner must be free from any spillage, residue or other obstructions. The flash tubes must be clean and properly aligned with the piloting housing to insure good top burner ignition.

Remove and clean drip tray, which is below the burners, daily.

BLACK BAKED ENAMEL: Allow unit to cool somewhat after use and wash exterior with a hot mild detergent or soap solution; particularly clean off all grease deposits. Dry thoroughly with a dry cloth.

STAINLESS STEEL: To remove normal dirt, grease, or product residue from stainless steel use ordinary soap and water (with or without detergent) applied with a sponge or cloth. Dry thoroughly with a clean cloth.

To remove grease and food splatter or condensed vapors that have baked on the equipment, apply cleanser to a damp cloth or sponge and rub cleanser on the metal in the direction of the polishing lines on the metal. Rubbing cleanser as gently as possible in the direction of the polished lines will not mar the finish of the stainless steel. NEVER RUB WITH A CIRCULAR MOTION. Soil and burnt deposits which do not respond to the above procedure can usually be removed by rubbing the surface with SCOTCH-BRITE scouring pads or STAINLESS scouring pads. DO NOT USE ORDINARY STEEL WOOL, as any particles left on the surface will rust and further spoil the appearance of the finish. NEVER USE A WIRE BRUSH, STEEL SCOURING PADS (EXCEPT STAINLESS), SCRAPER, FILE OR OTHER STEEL TOOLS. Surfaces which are marred collect dirt more rapidly and become more difficult to clean.

TO REMOVE HEAT TINT: Darkened areas sometimes appear on stainless steel surfaces where the area has been subjected to excessive heat. These darkened areas are caused by thickening of the protective surface of the stainless steel and are not harmful. Heat tint can normally be removed by the foregoing, but tint which does not respond to this procedure calls for a vigorous scouring in the direction of the polish lines using SCOTCH-BRITE scouring pads or a STAINLESS scouring pad in combination with a powdered cleanser. Heat tint action may be lessened by not applying, or by reducing, heat to equipment during slack periods.

SECTIONAL RANGE
FRONT MANIFOLD BATTERY TYPE
SERVICE

ADJUSTMENTS

WARNING:

ADJUSTMENTS AND SERVICE WORK MAY BE PERFORMED ONLY BY A QUALIFIED TECHNICIAN WHO IS EXPERIENCED IN, AND KNOWLEDGEABLE WITH, THE OPERATION OF COMMERCIAL COOKING EQUIPMENT. HOWEVER, TO ASSURE YOUR CONFIDENCE, CONTACT YOUR AUTHORIZED SERVICE AGENCY FOR RELIABLE SERVICE, DEPENDABLE ADVICE OR OTHER ASSISTANCES, AND FOR GENUINE FACTORY PARTS.

PILOT ADJUSTMENTS:

Oven Pilots (Models with "B" suffix): Turn slotted screw adjacent to the red button in the spring compartment under oven. Minimum pilot should withstand a quick opening and closing of oven door.

Oven Pilot (Models with "C" or "D" suffix - without "CO" prefix): On models equipped with Pilot Adjustment Key on safety:

1. Remove pilot adjustment cap (on safety above red push button).
2. Adjust pilot key to provide properly sized flame.
3. Replace pilot adjustment cap.

Oven Pilot (Models with "C" or "D" suffix — without "CO" prefix): On models without Pilot Adjustment Key on safety:

1. Turn slotted screw on the pilot valve located at manifold to provide properly sized flame.

OVEN STANDING PILOT ADJUSTMENT (Models with "CO" prefix): The standing oven pilot flame can be adjusted by turning the adjusting screw on the pilot line valve with a screwdriver. The pilot line valve is located behind the front panel below the oven door (see Diagram 2). Remove the front panel to gain accessibility. The pilot flame is properly adjusted when it is just large enough to maintain a glowing red color of the flame switch capillary bulb.

TOP SECTION PILOTS: All top section pilots are adjustable by turning the slotted screw on the pilot valve located at the manifold.

BURNER - HIGH ADJUSTMENT (All Burners):

1. Turn valve or thermostat to maximum or full on position.
2. Loosen set screw which holds the sheet metal air shutter.
3. If the flame is blowing or lifting off of the ports, close air shutter on front of burner until a stable flame is obtained.
4. If the flame is yellow tipping, open the air shutter until a stable flame is obtained.
5. Tighten the set screw which holds the air shutter.

SIMMER ADJUSTMENT:

Graduated Heat Top, Uniform Heat Top, Fry Top (Griddle), units have a simmer adjustment screw located on the side of the valve body. If the simmer flame is not the size specified under "OPERATION" do the following:

1. Remove valve panel. Adjust valve to LOW position.
2. Remove cap from right side of valve stem. Adjust screw until stable flame of correct height is obtained. Check for gas leaks using soapy water ONLY.
3. Replace cap and valve panel.

For Open Top Burners simmer adjustment is as follows:

1. Adjust valve to low position. Remove knob.
2. Insert screwdriver into center of valve stem. Adjust until correct flame is attained.
3. Check for gas leaks using soapy water ONLY. Replace knob.

ADJUSTMENTS

STANDARD-TYPE OVEN: BY-PASS FLAME (MINIMUM BURNER FLAME)

The pilot must be lit to make this adjustment.

1. Remove oven bottom so burner is visible.
2. Turn on oven valve.
3. Turn thermostat to 200 °F so main burner ignites.
4. With oven cool, turn dial clockwise slowly until by-pass seat just snaps OFF.
5. Immediately reverse rotation and turn dial counterclockwise until by-pass snaps open.
6. Remove dial.
7. With a screwdriver, turn "by-pass flame adjuster" screw counterclockwise to increase the bypass flame or clockwise to decrease the entire burner to a 1/8" minimum — 1/4" maximum stable flame. (See Fig. 2, Section 3, Page 3.)
8. Replace dial.

NOTE: While making this adjustment, if the oven should become heated while the dial is set at a low range (below 350°F), the by-pass flame will shut off completely. If this occurs, turn dial counterclockwise slowly until by-pass gas snaps on. Then check by-pass adjustment as stated above.

THERMOSTATIC GRIDDLE: BY-PASS FLAME (MINIMUM BURNER FLAME)

The pilot must be lit to make this adjustment.

1. Turn thermostat dial to 300 °F. Burner should light. Observe burner through slots in grease trough.
2. After temperature rises and remains constant turn dial back to "low." This closes main valve and permits only by-pass gas to burner.
3. Remove dial.
4. With a screwdriver, turn "by-pass flame adjuster" screw counterclockwise to increase the bypass flame or clockwise to decrease it until flame over the entire burner is a 1/8 " minimum — 1/4" maximum stable flame. Replace dial. (See Fig. 3, Section 3, Page 4)

SERVICE

BURNER TYPE	PILOT FLAME	BURNER FLAME	BY-PASS OR SIMMER FLAME
OVEN	Must heat capillary bulb to dull red	3/4" to 1"	By-pass 1/8" to 1/4"
Convection Type Oven	Must heat capillary to keep flame switch activated	Up to, and spread on fire plate approx. 3" on each side	N/A
Graduated Heat Top	3/4"	1-1/4"	1/8" to 1/4"
Uniform Heat Top	3/4"	1/2" to 3/4"	1/8" to 1/4"
Fry Top	3/4"	1/2" to 5/8"	1/8" to 1/4"
Thermostatic Fry Top	3/4"	1/2" to 5/8"	1/8" to 1/4"
Grate Top	1/2" to 5/8"	Impinge on pot set on grate	1/8" to 1/4"

All pilot flames should be stable and not carbon producing. All burner flames should be stable blue without blowing or yellow tipping.

RECALIBRATION
Oven Control

Field recalibration is seldom necessary, and should not be resorted to unless experience with cooking results definitely proves that the control is not maintaining the temperature to which the dial is set. To check oven temperatures when recalibrating, use a Robertshaw Test Instrument or a reliable mercury oven thermometer.

1. Place the thermocouple of test instrument or thermometer in the middle of an empty oven.

2. Remove knob. Use indicator mark, as shown in Fig. 7, for all dial settings.

3. Turn thermostat so 400 °F lines up with the indicator mark.

4. Allow the oven to heat until flame cuts down to by-pass. After sufficient time, check temperature. If the temperature does not read within 15 degrees of the dial setting, recalibrate as follows:

5. Hold calibration plate and loosen the two calibration lock screws until the plate can be moved independently of the control.

6. Turn calibration plate so that the instrument or thermometer reading is in line with the indicator mark, as explained above. Tighten the lock screws. Replace dial.

7. NOTE: If the above adjustment is prevented by the two loosened calibration lock screws being in contact with the ends of the screw clearance slots in the calibration plate, remove the screws and after turning the calibration plate to the proper location, reassemble screws in the other tapped holes designed for them.

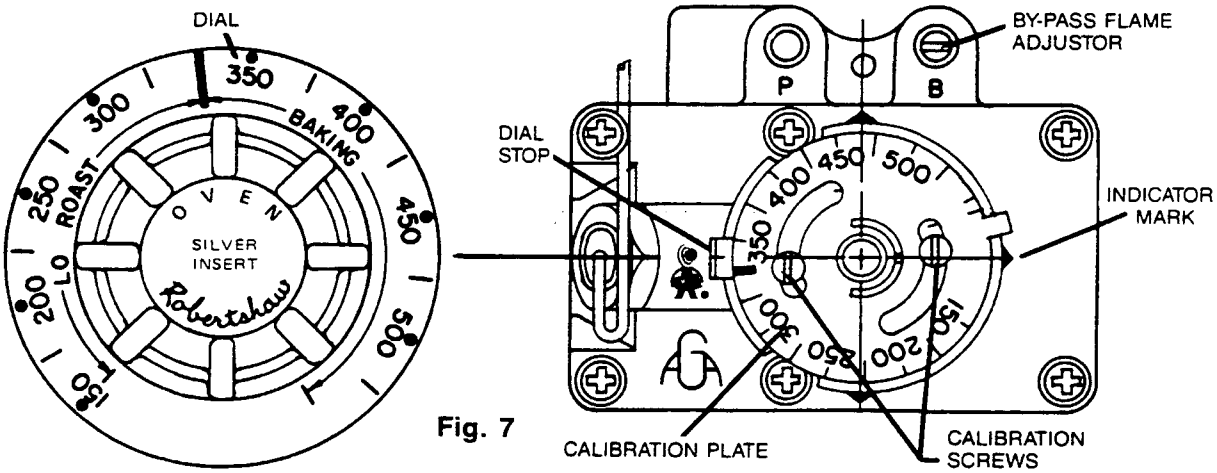

Fig. 7

SERVICE

ADJUSTMENTS

RECALIBRATION
Griddle Control

Field recalibration is seldom necessary, and should not be resorted to unless experience with cooking results definitely proves that the control is not maintaining the temperature to which the dial is set. To check temperatures when recalibrating use a Robertshaw Test Instrument or a reliable griddle thermometer.

1. Place the disc-type thermocouple of test instrument or griddle thermometer on the griddle, directly over the area where bulb is attached to underside.

2. Use the indicator mark as shown in Fig. 8.

3. Turn thermostat so 400 °F lines up with the indicator mark.

4. Allow the griddle to heat until flame cuts down to bypass. After sufficient time, check temperature. If the temperature does not read within 25 degrees of the dial setting, recalibrate as follows:

5. Hold calibration plate and loosen the two calibration lock screws until the plate can be moved independently of the control.

6. Turn calibration plate so that the instrument or thermometer reading is in line with the indicator mark. Hold plate and tighten screws firmly.

7. Replace dial.

8. NOTE: If the above adjustment is prevented by the two loosened calibration lock screws being in contact with the ends of the screw clearance slots in the calibration plate, remove the screws and after turning the calibration plate to the proper location, reassemble screws in the other tapped holes designed for them.

SERVICE

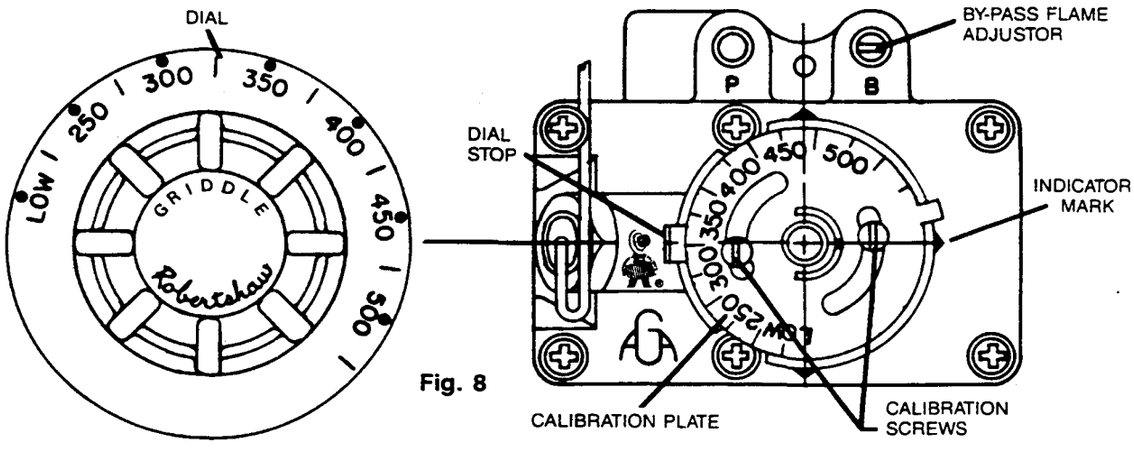

Fig. 8

Litho in U.S.A.
4-92

CONVECTION-TYPE OVEN:

THERMOSTAT ADJUSTMENT: The calibration of the thermostat should not be changed until sufficient experience with cooking results have definitely proved that the thermostat is not maintaining proper oven temperatures. Before any recalibration is attempted, the oven temperature should be checked by the following procedure:

1. The oven must be empty of all trays or pans.
2. Place a pyrometer couple or a reliable mercury oven-type thermometer at the center of the middle rack.
3. Turn on the blower.
4. Set the dial at 375 degrees F.
5. The red "Cooking Light" will go out when the thermostat turns off the burners.
6. Allow three such cycles for the temperature to stabilize.
7. Read the pyrometer or thermometer immediately after the light goes out for the third time and again immediately after it comes on the next time.
8. If the average of these readings and the dial setting vary by more than 15 degrees, recalibrate be following the instructions outlined below.

TO RECALIBRATE:

NOTE: Recalibration should be attempted only by a competent serviceman.

1. Remove knob from dial shaft "B."
2. Turn screw "A" clockwise to decrease and counterclockwise to increase temperature.
3. 1/4 turn changes the temperature 35 degrees F.
4. Replace knob on dial shaft.
5. After the calibration is made, set the dial at 375 °F and recheck the oven temperature using the method outlined by Items 1 thru 7 of the oven temperature checking procedure.

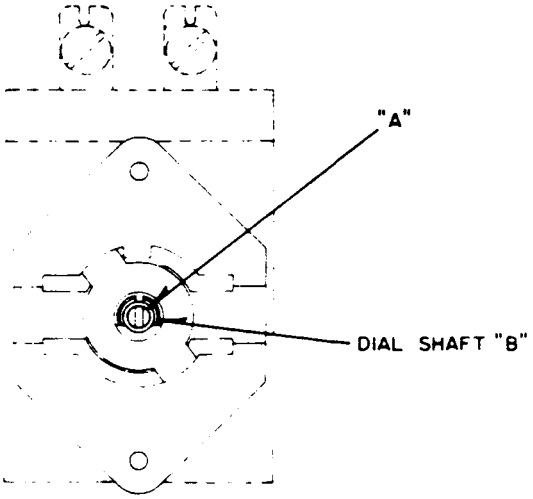

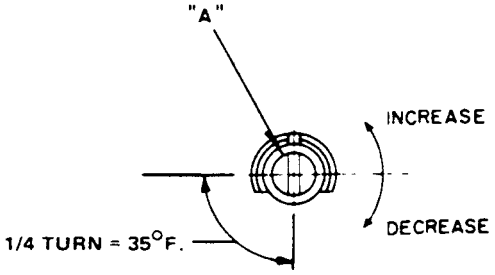

TROUBLE SHOOTING:

Problem	Look for —
All ranges in battery will not turn on	— Main gas supply to ranges is "OFF."
All ranges produce excessive carbon deposits	— Incorrect gas type supplied to battery. — Incorrect supply pressure.
Only some ranges in a battery produce excessive carbon deposits (burners)	— Incorrect orifices. — Primary air not adjusted properly.
Only some pilots produce excessive carbon deposits	— Pilot gas not adjusted properly. — Incorrect pilot orifice.
Top burner (not oven) will not come on	— Manual valve for top burner in "OFF" position. — Pilot out. — Clogged burner charge port (open top burners).
Top section pilot will not stay ignited	— Pilot gas not adjusted properly. — Clogged orifice. — Draft condition. — Improper ventilation system. — Air in gas line.

STANDARD-TYPE OVEN

Problem	Look For —
Oven will not come on	— Manual valve for oven in "OFF" position. — Oven pilot is out.
Oven pilot will not stay ignited	— Pilot gas not adjusted properly. — Bad thermocouple. — Bad thermocouple connections at safety valve. — Bad safety. — Clogged orifice. — Draft condition. — Improper ventilation system. — Air in gas line.

CAUTION: *WHEN CHANGING MOTOR OR SERVICING UNIT, ALWAYS VERIFY THAT BLOWER WHEEL ROTATION IS AS ILLUSTRATION SHOWS. (CLOCKWISE WHEN LOOKING INTO OVEN CAVITY).*

BLOWER WHEEL ROTATION

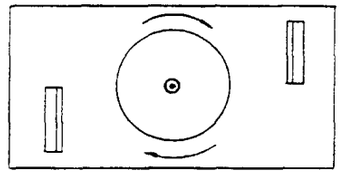

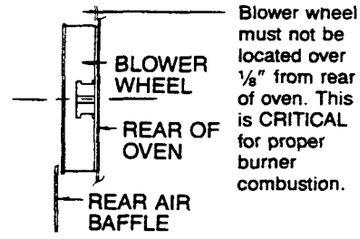

B. **CONTROL BOX ASSEMBLY COMPONENTS (See Diagram 1, Section 4, Page 6):** The control box assembly components are easily serviceable by removing two screws (one at the top and one at the bottom) of the control panel and then sliding out the control box. However, before attempting to slide out the control box, follow the instructions on the "Caution" label attached to the unit lower front panel. The "Caution" label reads as follows:

CAUTION: *BEFORE SLIDING OUT CONTROL BOX FOR SERVICING. REMOVE BASE PANELS BELOW OVEN DOOR AND REMOVE THE WIRE TIE FROM THE SPARK IGNITER ELECTRODE WIRE (BLACK WIRE).*

TO RETURN CONTROL BOX TO ORIGINAL POSITION, PUSH IN SLOWLY WHILE LIGHTLY PULLING THE SPARK IGNITER WIRE (BLACK WIRE) INTO THE OVEN BURNER CONTROL AREA (BELOW OVEN DOOR). RE-ATTACH A WIRE TIE IN A SIMILAR FASHION, AS BEFORE IT WAS REMOVED. REPLACE BASE PANELS.

After sliding out the control box, the controls are accessible by removing the control box cover.

C. **THERMOSTATS:** To totally remove the thermostat after the control box has been slid out, as described in "B," further steps must be taken:

1. Remove the control box wiring strain relief stop located on the top of the control box.
2. Slide out the control box far enough to disconnect the wiring harness plugs.
3. Remove the thermostat capillary tie down bracket located in the control box.
4. Remove the upper air duct.
5. Remove the capillary bulb bracket from inside of the oven.
6. Slide the capillary bulb out of the oven cavity into the control box area for complete removal.

D. **COOLING BLOWER:** To service the cooling blower follow the same steps as for removal of the oven thermostat. After the oven thermostat has been removed, the control box assembly, complete with the cooling blower, can be removed totally from the unit.

E. **208/236V, 50 VA TRANSFORMER:** The transformer is located in a box mounted on the rear of the unit (see Diagram 3, Section 4, Page 7). To service the transformer from the front of the unit, disconnect the motor mount plate as described in "A." Pull the motor mount plate with motor attached into the oven cavity. Reach through the opening at the rear of the oven and slide the transformer box up until it is free of its mounting plate and pull it into the oven cavity.

F. **FUSES:** When replacing the fuses, the fuse should be inserted into the fuse holder cap FIRST and then into the fuse holder by gripping the plastic top of the cap only. These steps should be done with caution by a qualified serviceman, as the danger of severe electrical shock exists if the unit is not disconnected from the power supply.

NOTE: When performing service work, the appropriate wiring diagram for your oven can be found at the rear of this manual and also on the unit.

The diagram on the unit is located on the inside of the control box cover. It can be accessed by following the instructions for sliding out the control box assembly. (See "SERVICE" Paragraph B., this page.)

CAUTION: *PROPER AND EFFICIENT OPERATION OF OVEN IS DEPENDENT ON CORRECT INSTALLATION AND FUNCTION OF COMPONENTS. ALWAYS VERIFY THAT COMPONENTS ARE IN PLACE AND FUNCTIONING AS INTENDED.*

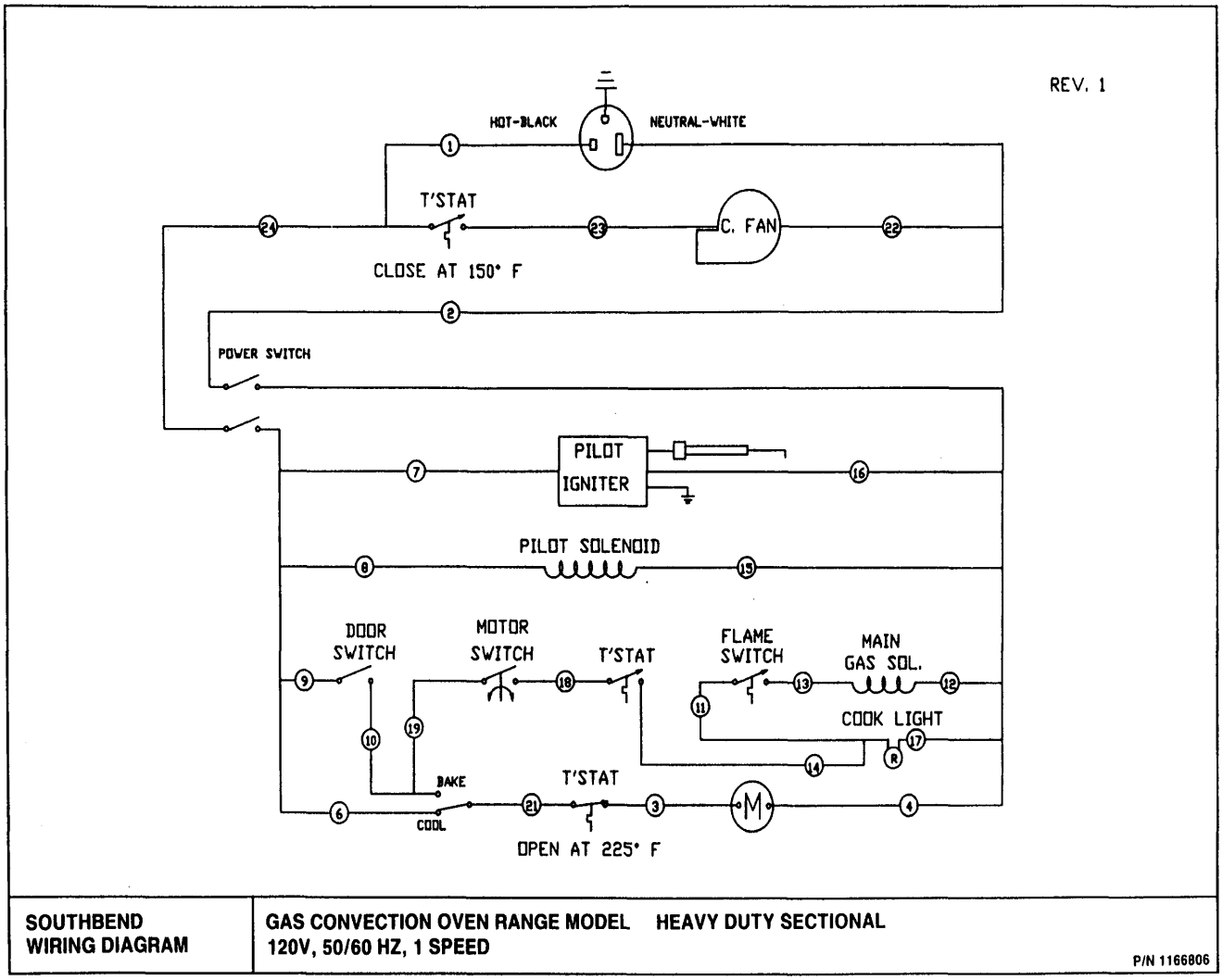

SOUTHBEND WIRING DIAGRAM	**GAS CONVECTION OVEN RANGE MODEL HEAVY DUTY SECTIONAL** **120V, 50/60 HZ, 1 SPEED** P/N 1166806

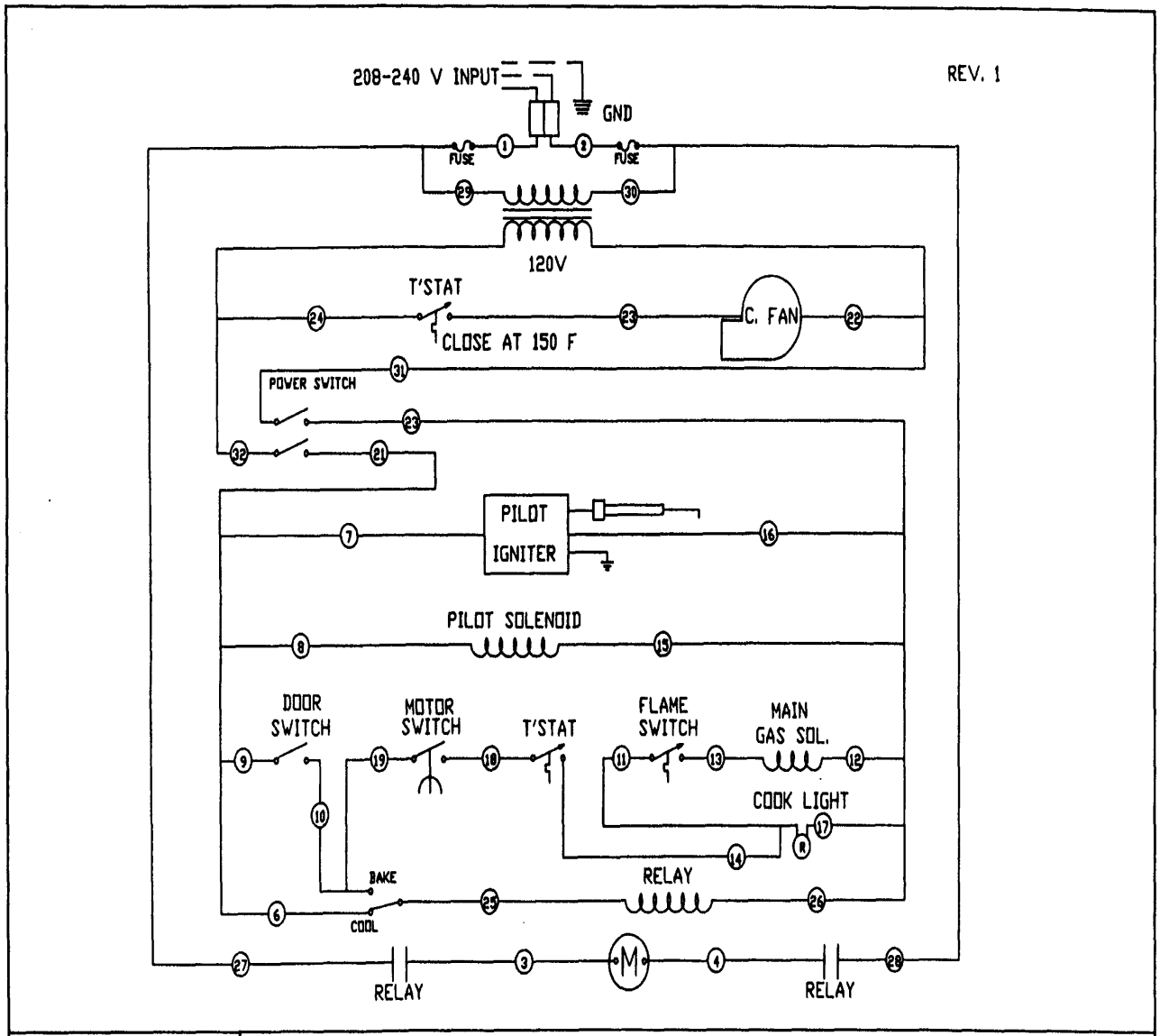

SOUTHBEND WIRING DIAGRAM	GAS CONVECTION OVEN RANGE MODEL HEAVY DUTY SECTIONAL 208-240V, 50/60 HZ, 1 SPEED P/N 1166820

SERVICE

SECTIONAL RANGE FRONT MANIFOLD BATTERY TYPE

PARTS

PARTS

WARNING:

INSTALLATION OF OTHER THAN GENUINE SOUTHBEND PARTS WILL VOID THE WARRANTY ON THIS EQUIPMENT.

The serial plate is located inside the lower front panel on the right.

Replacement parts may be ordered either through a Southbend Authorized Parts Distributor or a Southbend Authorized Service Agency.

When ordering parts, please supply the Model Number, Serial Number, Part Number, Description, plus Finish, Type of Gas and Electrical Characteristics, as applicable.

For parts not listed, consult a Southbend Authorized Parts Distributor or Southbend Authorized Service Agency. If necessary, please consult Southbend Parts Department for assistance.

SUFFIX	DATE	INDICATES
A	Pre-1978	On Models 1361 and 1362 only. Top burners changed from flame retention burners to "H" burners.
B	1978	Unit has tubular steel oven burners instead of cast iron.
C	March 1982	Unit has a TS-11 safety, slotted valve panels, oven pilot bracket is part of oven burner.
	October 1988	First Convection Oven Base range without control fuse 88J20706.

"CO" PREFIX OVEN PARTS	
PART NO.	**DESCRIPTION**
1164503	Power Switch
1164504	Fan Switch
1161450	Cooking Light
1173542	Thermostat (1161452)
1166079	Thermostat Dial
1164809	Spark Igniter Module
1012596	Fuse Holder
1012510	Fuse
4440300	Motor (115V) (1165771)
4440300	Motor (220 VAC, 50 Hz) (1165898)
1162843	Terminal Block (208/236V)
1171891	50 VA Transformer (208/236V)
1164805	Flame Switch
1164807	Spark Electrode
1142000	Door Switch
1165733	Oven Burner
1168263	Standing Pilot (1165734)
1008744	Oven Burner Orifice (Nat. #44)
1008753	Oven Burner Orifice (LP #53)
1165510	Gas Solenoid Assy.
1165512	Pilot Line Valve
1165521	Blower Wheel
1165652	Oven Rack
1165732	Oven Rack Slide
1165692	Oven Bottom
1166100	Oven Fire Plate
1168207	Oven Door (Black) (1165903)
1168208	Oven Door (SS) (1165904)
4440000	Oven Door Handle Kit (4440002)
1168189	Oven Door Hinge (Lt.)
1168190	Oven Door Hinge (Rt.)
1165756	Oven Door Spring
1165905	Oven Door Chain Assy.
1166278	Front Lower Panel (Black)
1166277	Front Lower Panel (SS)
1165702	Spring Plunger (Door Latch)
1165906	Spring Plunger Catch (Door Latch)
1166129	Door Chain Pulley
1165783	Door Chain Pulley Bushing

"CO" PREFIX OVEN PARTS (Cont.)	
PART NO.	**DESCRIPTION**
1165956	Oven Door Seal - Top & Bottom (1165907)
1165955	Oven Door Seal - Sides (1165908)
1165763	Top Seal Retainer
1165764	Side Seal Retainer
1166106	Bottom Seal Retainer
1166107	Bottom Splash Guard
1166158	150° (N.O.) Direct Sensing Thermostat
1166159	225° (N.C.) Direct Sensing Thermostat
1166061	Cooling Blower (Common for both 120V or 208/236V)
1167003	Relay (208/236V Units)
1160533	Oven On-Off Knob
1021300	Oven On-Off Valve
4440300	Motor (208/236 VAC, 60 Hz) (1166085)
"B" SUFFIX OVEN PARTS	
1010398	Thermostat & Dial
1010301	Dial for 1010398
1162453	Oven Safety
1161033	Oven Pilot (Nat.)
1161034	Oven Pilot (LP)
1141800	Oven Burner
1099099	Pilot RIter & Single Valve Assy.
P-9203	Pilot Filter & Double Valve Assy.
1021300	Oven On-Off Valve
1160533	Oven On-Off Knob
1008742	Oven Orifice (Nat.)
1008752	Oven Orifice (LP)
1000315	Oven Rack
1167432	Oven Fire Plate (1118198)
1108298	Oven Bottom
1024197	Oven Door Assy. (Black) (1124195)
1024196	Oven Door Assy. (SS) (1024199)
4440000	Oven Door Handle Kit (4440002)
2537	Door Hinge Assy.
P-1089	Oven Door Spring
1119099	Quadrant
1034900	Left Spring Hook
1034901	Right Spring Hook
1009000	Quadrant Bracket

SEE NEXT PAGE FOR "C" & "D" SUFFIX OVEN PARTS

PARTS

"C" & "D" SUFFIX OVEN PARTS (Without "CO" Prefix)	
PART NO.	**DESCRIPTION**
1164037	OVEN SAFETY
1164125	OVEN BURNER
1163869	OVEN PILOT (NAT.)
1163870	OVEN PILOT (LP)
1163868	OVEN THERMOCOUPLE
1099002	OVEN PILOT VALVE
1163844	OVEN PILOT FILTER
1163844	OVEN PILOT VALVE & FILTER
1010398	THERMOSTAT & DIAL
1010301	DIAL FOR 1010398
1021300	OVEN ON-OFF VALVE
1160533	OVEN ON-OFF KNOB
1008742	OVEN ORIFICE (NAT.)
1008752	OVEN ORIFICE (LP)
1000315	OVEN RACK
1167432	OVEN FIRE PLATE (PROD. PRIOR TO
1167004	OVEN FIRE PLATE (PROD. DURING &
1108298	OVEN BOTTOM
1024197	OVEN DOOR ASSEMBLY (BLACK)
1024196	OVEN DOOR ASSEMBLY (SS) (1024194)
4440000	OVEN DOOR HANDLE KIT (4440002)
2537	OVEN DOOR HINGE ASSEMBLY
P-1089	OVEN DOOR SPRING
1119099	QUADRANT
1009000	QUADRANT BRACKET (1119000)
1034900	LEFT SPRING HOOK
1034901	RIGHT SPRING HOOK

GRADUATED HEAT TOP TOP SECTION PARTS		136		136-0/1		142		142-0/1	
		B	**C**		**C**	**B**	**C**		**C**
1021997	VALVE-NAT.	1	1	1	1	1	1	1	1
1021996	VALVE-LP	1	1	1	1	1	1	1	1
1160532	VALVE-KNOB	1	1	1	1	1	1	1	1
1038099	TOP PILOT	1	1	1	1	1	1	1	1
1884	BURNER ASM.	1	1	1	1	1	1	1	1
1018998	HOT TOP PLATE	2	2	2	2	2	2	2	2
1018997	HOT TOP RING	1	1	1	1	1	1	1	1
1018996	HOT TOP LID	1	1	1	1	1	1	1	1
1109299	REAR COLLAR	1	1	1	1				
1109295	REAR COLLAR					1	1	1	1
1099099	PILOT FILTER &	2		1		2		1	
1099002	PILOT VALVE		2			1		2	1

UNIFORM HEAT TOP TOP SECTION PARTS		1362		1362-0/1		1422		1422-0/1		162-0/1		122-0/1	
		B	**C**	**A**	**C**	**B**	**C**	**A**	**C**	**A**	**C**	**A**	**C**
1099002	PILOT VALVE		3		2		3		2		1		1
1099099	PILOT FILTER &			1				1		1		1	
P-9203	PILOT FILTER & DBL.	1											
1123497	H-BURNER		2		2		2		2	1	1	1	1
1123499	LT. H-BURNER	1		1		1		1					
1123498	RT. H-BURNER	1		1		1		1					
1021999	VALVE-NAT.	2	2	2	2	2	2	2	2	1	1	1	1
1021998	VALVE-LP	2	2	2	2	2	2	2	2	1	1	1	1
1160532	VALVE KNOB	2	2	2	2	2	2	2	2	1	1	1	1
1038099	TOP PILOT		2		2		2		2	1	1	1	1
1046497	TOP PILOT-NAT.	3		3		3		3					
1046496	TOP PILOT-LP	1		1		1		1					
1019601	UNIFORM TOP PLATE	2	2	2	2	2	2	2	2	1	1	1	1
1160297	REAR COLLAR PLATE	1	1	1	1								
1109295	REAR COLLAR PLATE					1	1	1	1				
1160528	REAR COLLAR PLATE									1	1		
1161728	REAR COLLAR PLATE											1	1

FRY TOP UNITS TOP SECTION PARTS		1361		1361-0/1		1421		1421-0/1		T-1361		T-1361-0/1		T-1421		T-1421-0/1		161-0/1		121-0/1		T-161-0/1		T-121-0/1	
		B	C	A	C	B	C	A	C	B	C	A	C	B	C	A	C	A	C	A	C	A	C	A	C
1099002	PILOT VALVE		3		2		3		2		3		2		3		2		1		1		1		1
1099099	PILOT FILTER & VALVE			1				1										1		1		1		1	
1021300	ON-OFF VALVE	1	1			1	1			3	3	2	2	3	3	2	2					1	1	1	1
P-9203	PILOT FILTER & DBL.	1				1				1				1											
1123497	H-BURNER ASM.		2		2		2		2		2		2		2		2	1	1	1	1	1	1	1	1
1160528	REAR COLLAR PLATE																	1	1	1	1	1	1	1	1
1035993	GRIDDLE PLATE																					1	1		
1035995	GRIDDLE PLATE																							1	1
1021999	VALVE-NAT.	2	2	2	2	2	2	2	2									1	1	1	1				
1021998	VALVE-LP	2	2	2	2	2	2	2	2									1	1	1	1				
1160532	VALVE KNOB	2	2	2	2	2	2	2	2									1	1	1	1				
1038099	TOP PILOT		2		2		2		2		2		2		2		2	1	1	1	1	1	1	1	1
1046497	TOP PILOT-NAT.	1		1		1		1		1		1		1		1									
1046496	TOP PILOT-LP	1		1		1		1		1		1		1		1									
1123498	H-BURNER ASM. RT.	1		1		1		1		1		1		1		1									
1123499	H-BURNER ASM. LT	1		1		1		1		1		1		1		1									
1035996	GRIDDLE PLATE	1	1	1	1																				
1035997	GRIDDLE PLATE					1	1	1	1																
1109299	REAR COLLAR PLATE	1	1	1	1	1	1	1	1	1	1	1	1	1	1	1	1								
2690	GREASE BOX ASM.	1	1	1	1	1	1	1	1	1	1	1	1	1	1	1	1	1	1	1	1	1	1	1	1
1010499	GRIDDLE THERMOSTAT									2	2	2	2	2	2	2	2					1	1	1	1
1010400	THERMOSTAT KNOB									2	2	2	2	2	2	2	2					1	1	1	1
* 1165429	THERMOSTAT KNOB									2	2	2	2	2	2	2	2					1	1	1	1
1160534	ON-OFF KNOB									2	2	2	2	2	2	2	2					1	1	1	1
1035998	GRIDDLE PLATE									1	1	1	1												
1035999	GRIDDLE PLATE													1	1	1	1								
1035991	GRIDDLE PLATE																			1	1				
1035988	GRIDDLE PLATE																	1	1						

** FOR FRY TOP UNITS WITH GREASE DRAIN ON THE RIGHT. FOR ALL UNITS*

1136004	Black right front filler for single oven range.
1136005	Stainless steel right front filler for single oven range.
1136006	Black left front filler for single oven range.
1136007	Stainless steel left front filler for single oven range.

PARTS

SPLIT TOP UNITS TOP SECTION PARTS		1365		1365-0/1		1425		1425-0/1		1366	1366-0/1	1426	1426-0/1	T-1366	T-1366-0/1	T-1426	T-1426-0/1	1367	1367-0/1	1427	1427-0/1	T-1367	T1367-0/1	T-1427	T-1427-0/1
		B	C	B	C	B	C	B	C	C	C	C	C	C	C	C	C	C	C	C	C	C	C	C	C
2886	DIRT TRAY ASM.	1	1	1	1	1	1	1	1	1	1	1	1	1	1	1	1								
1099002	PILOT VALVE		3		2		3		2	3	2	3	2	3	2	3	2	3	2	3	2	3	2	3	2
1163889	LIGHTER ASM.		1		1		1		1	1		1		1		1		1		1		1		1	
1163891	VALVE BODY	2	2	2	2	2	2	2	2	2	2	2	2	2	2	2	2								
1006447	VALVE HOOD-NAT.	2	2	2	2	2	2	2	2	2	2	2	2	2	2	2	2								
1006456	VALVE HOOD-LP	2	2	2	2	2	2	2	2	2	2	2	2	2	2	2	2								
1099099	PILOT FILTER & VALVE	1		2		1		2																	
1021300	ON-OFF VALVE	1	1			1	1			1		1		2	1	2	1	1		1		2	1	2	1
P-9203	PILOT FILTER & DBL. VALVE	1				1																			
1123497	H BURNER ASM.	1	1	1	1	1	1	1	1	1	1	1	1	1	1	1	1	2	2	2	2	2	2	2	2
1035993	GRIDDLE PLATE													1	1	1	1					1	1	1	1
1021999	VALVE-NAT.	1	1	1	1	1	1	1	1	1	1	1	1					2	2	2	2	1	1	1	1
1021998	VALVE-LP	1	1	1	1	1	1	1	1	1	1	1	1					2	2	2	2	1	1	1	1
* 1021697	VALVE-NAT.	2		2		2		2																	
1160532	VALVE KNOB	3	3	3	3	3	3	3	3	3	3	3	3	2	2	2	2	2	2	2	2	1	1	1	1
1038099	TOP PILOT	1	1	1	1	1	1	1	1	1	1	1	1	1	1	1	1	2	2	2	2	2	2	2	2
B42-00005	TOP PILOT (15875)	1		1		1		1																	
2687	FLASH TUBE	2	2	2	2	2	2	2	2	2	2	2	2	2	2	2	2								
15878	CHARGE PORT	2	2	2	2	2	2	2	2	2	2	2	2	2	2	2	2								
1166046	BURNER INSERT (1166045)	2	2	2	2	2	2	2	2	2	2	2	2	2	2	2	2								
1888	REAR OPEN TOP BURNER	1	1	1	1	1	1	1	1	1	1	1	1	1	1	1	1								
1890	FRONT OPEN TOP BURNER	1	1	1	1	1	1	1	1	1	1	1	1	1	1	1	1								
1019601	UNIFORM TOP PLATE	1	1	1	1	1	1	1	1									1	1	1	1	1	1	1	1
2989	GRATE TOP PLATE	1	1	1	1	1	1	1	1	1	1	1	1	1	1	1	1								
1109299	REAR COLLAR PLATE	1	1	1	1					1	1			1	1			1	1			1	1		
1109295	REAR COLLAR PLATE					1	1	1	1			1	1			1	1			1	1			1	1
1010499	GRIDDLE THERMOSTAT													1	1	1	1					1	1	1	1
1010400	THERMOSTAT KNOB													1	1	1	1					1	1	1	1
[2]1165429	THERMOSTAT KNOB													1	1	1	1					1	1	1	1
1160534	ON-OFF KNOB													1	1	1	1					1	1	1	1
2690	GREASE BOX ASM.									1	1	1	1	1	1	1	1	1	1	1	1	1	1	1	1
[1]1165446	GREASE BOX ASM.									1	1	1	1	1	1	1	1	1	1	1	1	1	1	1	1
1035988	GRIDDLE PLATE									1	1	1	1					1	1	1	1				

* PRODUCTION PRIOR TO MARCH 1980.

1 USED ON SPLIT TOP UNITS WITH EITHER GRIDDLE ON THE RIGHT OR GRIDDLE OVER-LAPPING FROM THE LEFT.

2 USED ON SPLIT TOP UNITS WITH THE GRIDDLE OVER-LAPPING FROM THE LEFT.

4 BURNER OPEN TOP TOP SECTION PARTS		1364			1364-0/1			1424			1424-0/1			164-0/1			124-0/1			1364HT	1364HT-0/1	1424HT	142HT-0/1	164HT-0/1	124HT-0/1
		B	C	D		C	D	B	C	D		C	D		C	0		C	D	C	C	C	C	C	C
1099002	PILOT VALVE		3			2			3			2			1			1		3	2	3	2	1	1
1099099	PILOT FILTER & VALVE	3			2			3			2			1			1								
1166004	DBL. PILOT VALVE			2			2			2			2			1			1						
1163889	LIGHTER ASM.		2			2			2			2			1			1		2	2	2	2	1	1
B42-00005	LIGHTER ASM. (15875)	2			2			2			2			1			1								
1166013	REAR PILOT LIGHTER (1166031)			2			2			2			2			1			1						
1166012	FRONT PILOT LIGHTER			2			2			2			2			1			1						
1163891	VALVE BODY	4	4		4	4		4	4		4	4		2	2		2	2		4	4	4	4	2	2
1006447	VALVE HOOD-NAT.	4	4		4	4		4	4		4	4		2	2		2	2							
1006456	VALVE HOOD-LP	4	4		4	4		4	4		4	4		2	2		2	2							
* 1021697	VALVE-NAT.	4			4			4			4			2			2								
1168276	VALVE BODY (1166005)			4			4			4			4			2			2						
1166010	VALVE EXT.			4			4			4			4			2			2						
1008744	VALVE HOOD-NAT.			4			4			4			4			2			2						
1008755	VALVE HOOD-LP			4			4			4			4			2			2						
1160532	VALVE KNOB	4	4		4	4		4	4		4	4		2	2		2	2		4	4	4	4	2	2
1166011	VALVE KNOB			4			4			4			4			2			2						
2687	FLASH TUBES	4	4		4	4		4	4		4	4		2	2		2	2		4	4	4	4	2	2
15878	CHARGE PORT	4	4		4	4		4	4		4	4		2	2		2	2		4	4	4	4	2	2
1166046	BURNER INSERT (1166045)			4			4			4			4			2			2						
1888	REAR OPEN TOP BURNER	2	2		2	2		2	2		2	2		1	1		1	1		2	2	2	2	1	1
1890	FRONT OPEN TOP BURNER	2	2		2	2		2	2		2	2		1	1		1	1		2	2	2	2	1	1
1166015	REAR OPEN TOP BURNER			2			2			2			2			1			1						
1166014	FRONT OPEN TOP BURNER			2			2			2			2			1			1						
2989	GRATE TOP PLATE	2	2		2	2		2	2		2	2		1	1		1	1							
1892	DIRT TRAY	1	1		1	1		1	1		1	1													
1109299	REAR COLLAR PLATE	1	1		1	1														1	1				
1109295	REAR COLLAR PLATE							1	1		1	1										1	1		
2886	DIRT TRAY													1	1		1	1		2	2	2	2	1	1
1006447	FRT. BURNER VALVE HOOD-NAT.																			2	2	2	2	1	1
1006450	REAR BURNER VALVE HOOD-NAT.																			2	2	2	2	1	1
1006454	FRT. BURNER VALVE HOOD-LP																			2	2	2	2	1	1
1006456	REAR BURNER VALVE HOOD-LP																			2	2	2	2	1	1
1165713	1/2 HOT TOP																			2	2	2	2	1	1
1165716	1/2 GRATE TOP																			2	2	2	2	1	1
1160528	REAR COLLAR PLATE													1	1										
1161728	REAR COLLAR PLATE																1	1							1

** PRODUCTION PRIOR TO MARCH 1980.*

6 BURNER OPEN TOP TOP SECTION PARTS																						
		B	C	D		C	D	B	C		C	B	C	D		C	D	B	C		C	C
1076798	VALVE	6	6	6	6	6	6	6	6	6	6	6	6	6	6	6	6	6	6	6	6	2
1160532	VALVE KNOB	6	6	6	6	6	6	6	6	6	6	6	6	6	6	6	6	6	6	6	6	2
1160320	PILOT LIGHTER W/FLASH TUBES	3	3	3	3	3	3	3	3	3	3	3	3	3	3	3	3	3	3	3	3	1
15878	CHARGE PORT	6	6	6	6	6	6	6	6	6	6	6	6	6	6	6	6	6	6	6	6	2
1162930	REAR OPEN TOP BURNER (3622)	3	3	3	3	3	3	3	3	3	3	3	3	3	3	3	3	3	3	3	3	1
1162932	FRONT OPEN TOP BURNER (3623)	3	3	3	3	3	3	3	3	3	3	3	3	3	3	3	3	3	3	3	3	1
1160160	GRATE TO PLATE	2	2		2	2		2	2	2	2	1	1		1	1		1	1	1	1	
1160162	SPIDER	6	6		6	6		6	6	6	6	1	1		1	1		1	1	1	1	2
1160453	HOT TOP PLATE											1	1		1	1		1	1	1	1	
1109299	REAR COLLAR PLATE	1	1	1	1	1	1					1	1	1	1	1	1				1	
1109295	REAR COLLAR PLATE							1	1	1	1							1	1	1	1	
1892	DIRT TRAY	1	1	1	1	1	1	1	1	1	1	1	1	1	1	1	1	1	1	1	1	
1164424	GRATE TOP PLATE																					1
1164654	REAR COLLAR PLATE																					1
1164638	DIRT TRAY																					1
1173385	GRATE TOP PLATE*			2			2							1			1					
1173457	HOT TOP PLATE													1			1					
1008750	ORIFICE HOOD (NAT) OT			6			6							3			3					
1008751	ORIFICE HOOD (NAT) HT													3			3					
1008756	ORIFICE HOOD (PROP) OT			6			6							3			3					
1008757	ORIFICE HOOD (PROP) HT													3			3					

- NOTE: 1173385 — 1 Piece replaces 1 - #1160160 and 3 - #1160162 on old units which had removable spider grids

.

Legs & Casters — All Units Effective 7-91	
PART NO.	**DESCRIPTION**
1172232	STAINLESS STEEL EARTHQUAKE LEG-4 REQUIRED-OPTIONAL
1174259	STAINLESS STEEL 6" ADJUSTABLE LEG
1174260	PACKAGE OF 4-#1174259-6" STAINLESS STEEL ADJUSTABLE LEGS
1174262	PACKAGE OF 4-#1172232-6" STAINLESS STEEL EARTHQUAKE
1174263	5" SWIVEL CASTER - 2 REQUIRED-OPTIONAL
1174264	5" SWIVEL CASTER W/BRAKE - 2 REQUIRED-OPTIONAL
1174265	PACKAGE OF 4 CASTERS-2 #1174263, 2 #1174264
1172788	LEG PAD (FOR DOUBLE CO ONLY)
1146201	HEX HEAD SCREW - 1/4 - 20x3/4 - 16 REQUIRED
1146500	1/4 LOCK WASHER - 16 REQUIRED

NOTICE

Information for models with suffix-40 in model number 40,000 BTU/hr. open-top burners

Clearances:

	Combustible Construction	Non-combustible Construction
Sides	12 inches	0 inches
Rear	6 inches	0 inches
Rear (CO" prefix)	6 inches	2 inches

40.000 BTU OPEN-TOP BURNER

40,000 BTU OPEN-TOP PARTS FOR 4 BURNER OPEN-TOP TOP SECTION PARTS MODELS WITH SUFFIX - 40		1364	1364-0/1	1424	1424-0/1	164-0/1	124-0/1	HT1364	HT1364-0/1	HT1424	HT1424-0/1	HT164-0/1	HT124-0/1
		D	D	D	D	D	D	D	D	D	D	D	D
1166004	Double Pilot Valve	2	2	2	2	1	1	2	2	2	2	1	1
1179244	Front Pilot Assembly	2	2	2	2	1	1	2	2	2	2	1	1
1179246	Rear Pilot Assembly	2	2	2	2	1	1						
1176004	Valve Body Natural	4	4	4	4	2	2	4	4	4	4	2	2
1008735	Valve Hood Natural	4	4	4	4	2	2	2	2	2	2	1	1
1176005	Valve Body Propane	4	4	4	4	2	2	4	4	4	4	2	2
1008749	Valve Hood Propane	4	4	4	4	2	2	2	2	2	2	1	1
1179222	Valve Ext. Nipple	4	4	4	4	2	2	2	2	2	2	1	1
1179240	Front Open-Top Burner	2	2	2	2	1	1	2	2	2	2	1	1
1179241	Rear Open-Top Burner	2	2	2	2	1	1						
1179230	Burner Insert	4	4	4	4	2	2	2	2	2	2	1	1
1177043	Burner Drip Cover	4	4	4	4	2	2	2	2	2	2	1	1
1179233	Knob Open Top	4	4	4	4	2	2	2	2	2	2	1	1
1179247	Grate Top	2	2	2	2	1	1						
1179394	1/2 Grate Top							2	2	2	2	1	1
1166013	Rear Pilot Assembly							2	2	2	2	1	1
1166015	Rear Burner							2	2	2	2	1	1
1166046	Rear Burner Insert							2	2	2	2	1	1
1008750	Rear Valve Hood Natural							2	2	2	2	1	1
1008756	Rear Valve Hood Propane							2	2	2	2	1	1
1166010	Valve Ext. Nipple							2	2	2	2	1	1
1166011	Knob (rear burner)							2	2	2	2	1	1
1165713	1/2 Hot Top							2	2	2	2	1	1

Table continued on next page Reference section four - parts page 5 for additional parts.

40,000 BTU OPEN TOP BURNER

40,000 BTU OPEN-TOP——— PARTS FOR 4 BURNER OPEN-TOP TOP SECTION PARTS		1364	1364-0/1	1424	1424-0/1	164-0/1	124-0/1	HT1364	HT1364-0/1	HT1424	HT1424-0/1	HT164-0/1	HT124-0/1
MODELS WITH SUFFIX - 40		D	D	D	D	D	D	D	D	D	D	D	
1179258	Pilot Support Front Burner							2	2	2	2	1	1
1179229	Pilot Support Front and Rear Burner	2	2	2	2	1	1						
1177044	Shim, Burner Rest					4	4					4	4
*1179259	Wok Ring												
* 1179388	Wok Pan												

*Optional parts: Wok for use on front burners.

40,000 BTU OPEN TOP PARTS FOR SPLIT TOP UNITS TOP SECTION PARTS		1365	1365-0/1	1425	1425-0/1	1366	1366-0/1	1426	1426-0/1	T-1366	T-1366-0/1	T-1426	T-1426-0/1	1367	1367-0/1	1427	1427-0/1	T-1367	T-1367-0/1	T-1427	T-1427-0/1
MODELS WITH SUFFIX - 40		C	C	C	C	C	C	C	C	C	C	C	C	C	C	C					
1166004	Double Pilot Valve	1	1	1	1	1	1	1	1	1	1	1	1								
1179244	Front Pilot Assembly	1	1	1	1	1	1	1	1	1	1	1	1								
1179246	Rear Pilot Assembly	1	1	1	1	1	1	1	1	1	1	1	1								
1176004	Valve Body Natural	2	2	2	2	2	2	2	2	2	2	2	2								
1008735	Valve Hood Natural	2	2	2	2	2	2	2	2	2	2	2	2								
1176005	Valve Body Propane	2	2	2	2	2	2	2	2	2	2	2	2								
1008749	Valve Hood Propane	2	2	2	2	2	2	2	2	2	2	2	2								
1179222	Valve Ext. Nipple	2	2	2	2	2	2	2	2	2	2	2	2								
1179240	Front Open-Top Burner	1	1	1	1	1	1	1	1	1	1	1	1								
1179241	Rear Open-Top Burner	1	1	1	1	1	1	1	1	1	1	1	1								
1179230	Burner Insert	2	2	2	2	2	2	2	2	2	2	2	2								
1177043	Burner Drip Cover	2	2	2	2	2	2	2	2	2	2	2	2								
1179233	Knob Open Top	2	2	2	2	2	2	2	2	2	2	2	2								
1179247	Grate Top	1	1	1	1	1	1	1	1	1	1	1	1								
1179229	Pilot Support Front and Rear	1	1	4	1	1	1	1	1	1	1	1	1								

Reference section four - parts page 4 for additional parts.

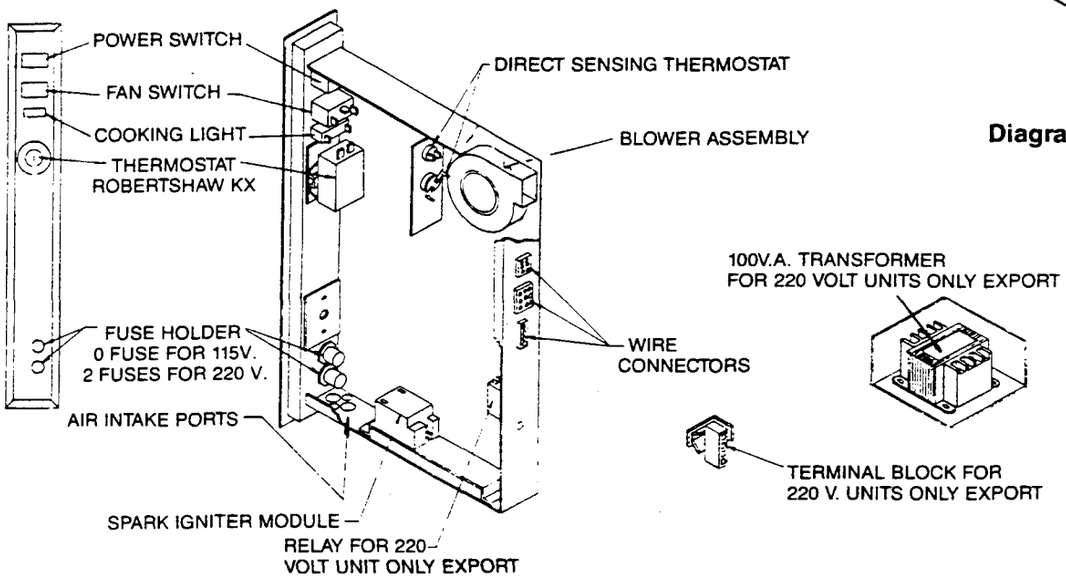

Diagram 1

Diagram 2 — CONVECTION OVEN BASE

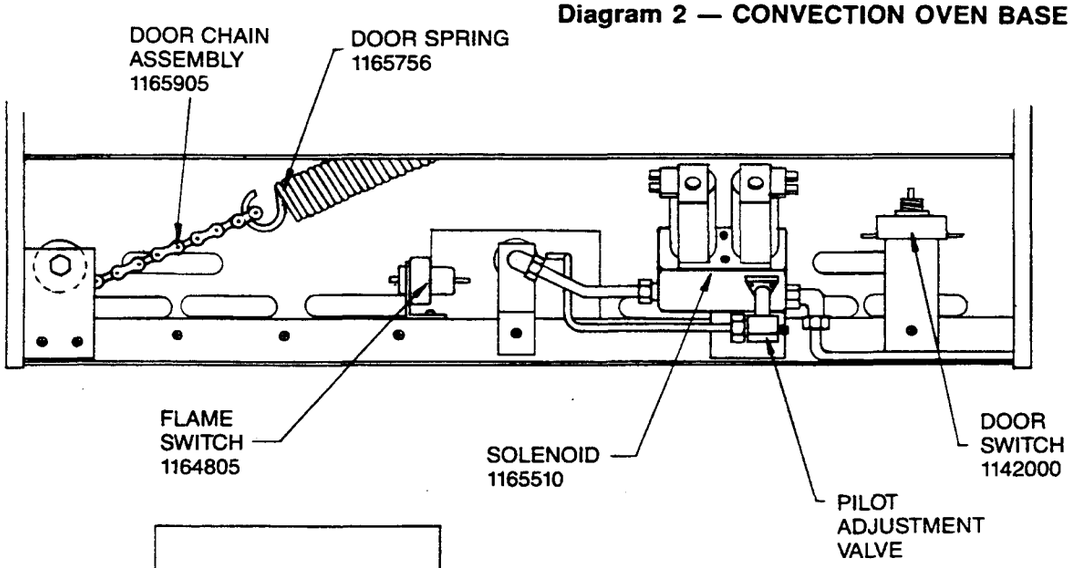

Diagram 3

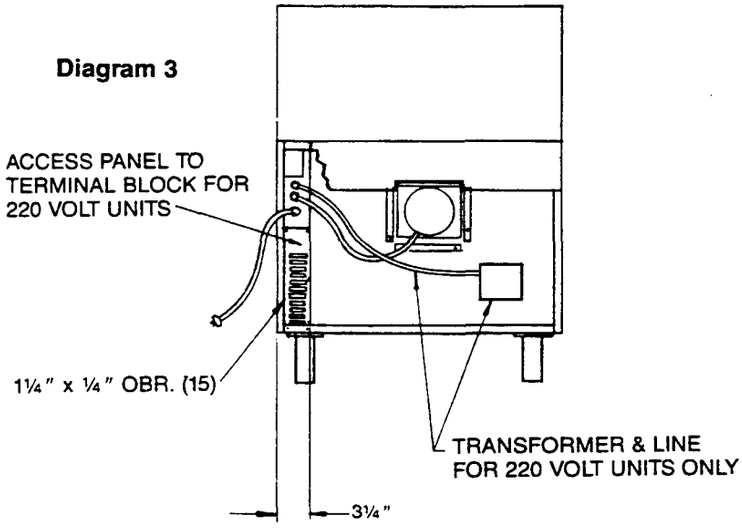

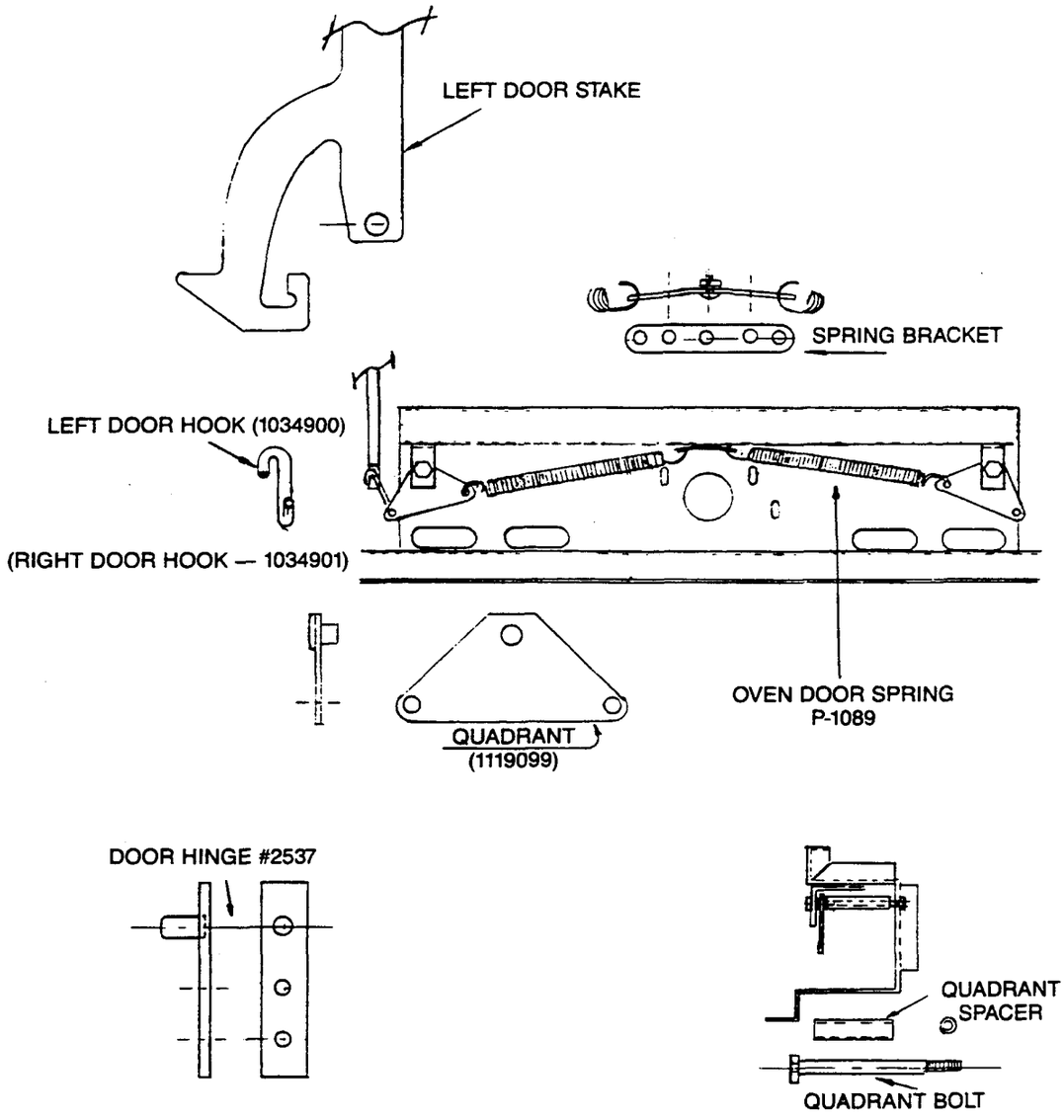

Diagram 4 — STANDARD OVEN BASE

southbend

A MIDDLEBY COMPANY

Convection Ovens
Cook & Hold Convection Ovens
Bake & Roast Ovens
Pizza Ovens

Ranges
Fryers
Special & Custom Equipment
Convection Steamers

Steam Kettles
Tilting Braising Pans
Cooker/Mixer Kettles
Floor Model Broilers

Under Fired Broilers
Salamander Broilers
Cheese Melters
Counter Top Broilers & Griddles

SECTIONAL RANGE FRONT MANIFOLD BATTERY TYPE

A product with the Southbend name incorporates the best in durability and low maintenance. We all recognize however, that replacement parts and occasional professional service may be necessary to extend the useful life of this unit. When service is needed, contact a Southbend Authorized Service Agency, or your dealer. To avoid confusion, always refer to the model number, serial number, and type of your unit.

southbend

A MIDDLEBY COMPANY

1100 Old Honeycutt Road Fuquay-Varina, NC 27526 (919)552-9161
FAX (919) 552-9798
(800) 348-2558

PART NUMBER 1161610/2. Rev. 4/92

southbend SERVICE B•U•L•L•E•T•I•N

TO: Southbend Parts & Service Distributors

FROM: Thomas S. Enyeart- CFSP
Director Product Service

DATE: February 9, 1994 **BULLETIN #9441**

SUBJECT: **Motor Change- Convection Oven Base Sectional Range Models CO 136, C01361, COT1361, C01362, C01363, C01365, C01366, C01367, all same in 42" depth; i.e. C0142, C01421**

Effective Date: August 1993 Serial #93F and thereafter

Please insert this Bulletin with the 1161610 Sectional Range Front Manifold Battery Type owners manual in the SR- Sectional Ranges section of your Master Southbend manual.

DISCONTINUED PART:

4440300 Motor Kit 115/208-240/60/1 -2 -2 speed (1175151)

No longer available. Use 4440367 or 4440368 depending on voltage.

NEW PARTS:

4440367 Motor Replacement Kit 120/60/1 (1174718, 4440300)
4440368 Motor Replacement Kit 208-240/60/1-3 (1174719, 4440300)

NOTE: The 4440367 is Mandatory Distributor Stock
Both 4440367 & 4440368 are Mandatory Warranty Return.
This discontinued motor was universal for 115 or 208/236- New ones are 115 V or 208-236.
This bulletin is to clarify and document this change-
These same motors are used on 300 Series Restaurant Convection Base Ranges, see Bulletin #9440

Prices are in the January 15, 1994 Parts Price List.

TE/dy

1100 Old Honeycutt Rd. • Fuquay-Varina, NC 27526 • (919) 552-9161 • (800) 348-2558 • Fax (919) 552-9798
Parts Service Hotline (800) 54 RANGE (800-547-2643)

southbend SERVICE B•U•L•L•E•T•I•N

TO: Southbend Parts & Service Distributors

FROM: Thomas S. Enyeart- CFSP
Director Product Service

DATE: February 9, 1994 **BULLETIN #9439**

SUBJECT: **Change To One Piece Oven Door Seal- Convection Oven Base Sectional Ranges**
Models CO 136, C01361, COT1361, C01362, C01363, C01364, C01365, C01366, C01367, all same in 42" Depth; i.e. C0142, C0144 etc.

Please insert this Bulletin with the #1161610 Sectional Range Front Manifold Battery Type owners manual in the SR- Sectional Range section of your Master Southbend manual.

The Oven Door Seal has been changed to one piece in lieu of 4 separate pieces. This gives a better air seal and lowers the replacement cost.

DISCONTINUED PARTS:

1165956 Oven Door Seal- Top & Bottom- (1165907)
1165955 Oven Door Seal- Sides (1165908)
2 each were required for a set.
These parts are no longer available.

NEW PART:

1176296 Oven Door Seal

NOTE: The 1176296 is Mandatory Distributor Stock
The new one piece seal is 7-333 ft. long
This is the same part as used on 300 Series Ranges- See Bulletin 9438.
This chance reduced the list price for complete set $32.70.

List Price- effective January 15, 1994- #1176296- $44 10

TE/dy

1100 Old Honeycutt Rd. • Fuquay-Varina, NC 27526 - (919) 552-9161 • (800) 348-2558 • Fax (919) 552-9798
Parts Service Hotline (800) 54 RANGE (800-547-2643)

southbend SERVICE B•U•L•L•E•T•I•N

TO: Southbend Parts & Service Distributors

FROM: Thomas S. Enyeart-CFSP
Director Product Service

DATE: February 7, 1994 **BULLETIN # 9434**

SUBJECT: **Oven Rack- Rack Guides Change/Clarification**
Models 136,1361, T1361, 1362, 1363, 1364, 1365, 1366, 1367, &
all same 42" Deep; i.e. 142,1421, etc.

Effective Date: phased in late 1992 & early 1993

Please insert this bulletin with the #1161610- Sectional Range- Front Manifold Battery Type owners manual in the SR- Sectional Range section of your master Southbend Manual.

This bulletin is to clarify and document oven rack guide and oven rack usage.

A major product improvement was made to all standard Sectional Range ovens adding porcelain enamel oven interior sides, top, and rear to the already porcelain bottom and door lining. At the same time the oven rack channels were changed from a U type steel channel to a plated round rod guide. The rack was also changed to a- standard plated and b- a non-tilt feature was added.

The following will clarify the where used questions:

DISCONTINUED PARTS:

1108002 Right Rack Support- steel channel- painted black
1108003 Left Rack Support- steel channel- painted black
1108098 Right Rack Support- steel channel- enameled
1108099 Left Rack Support- steel channel- enameled
1000315 Oven Rack- raw steal
1000315-CP Oven Rack- plated (was an option)
All of these parts are still available.

1100 Old Honeycutt Rd. • Fuquay-Varina, NC 27526 • (919) 552-9161 • (800) 348-2558 • Fax (919) 552-9798
Parts Service Hotline (800) 54 RANGE (800-547-2643)

NEW PARTS:

1173546 Rack Guide- plated- Left or Right

1173545-CP Oven Rack Plated

Please note:

If the oven interior is aluminized steel or painted steel and has U type steel rack channels it takes the old style components (a few were also made with porcelain enameled interiors- that had the U channels).

If the oven interior is porcelain enamel and the rack guides are plated round rods it takes new style components.

This change does not affect any units with a CO prefix

List Prices- effective 1-15-94

1173545-CP $74.00- Note: this is a corrected List Price

1173546-$12.10

TE/dy

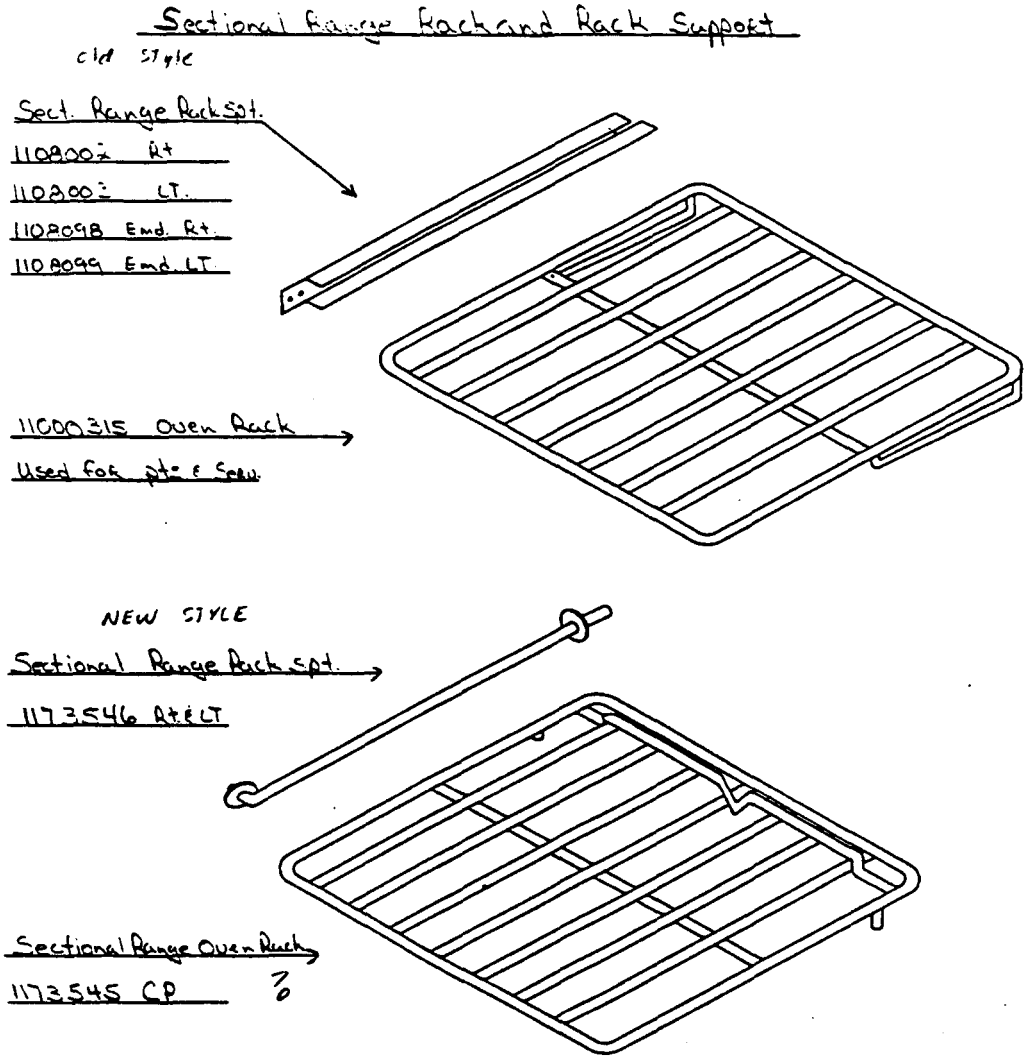

southbend SERVICE B•U•L•L•E•T•I•N

TO: Southbend Parts & Service Distributors

FROM: Thomas S. Enyeart- CFSP
Director Product Service

DATE: February 5, 1994 **BULLETIN #9420**

SUBJECT: **Valve Change- Sectional Oven & Thermo Griddle**
Models: 136, 1361, T1361, 1362, 1363,1364. T-161-1, T-161-0, 1365,1367, all with prefix CO and or T- Also all 42" Deep same units- i.e. 142, T-1421, etc.

Please insert this Bulletin with the 1161610 Sectional Range Front Manifold Battery Type Owners Manual in the SR- Sectional Range section of your master Southbend manual.

Effective October 1993 Serial #93J 75777 and thereafter

Oven and Thermo Control Griddle Valves have been changed. Changing from the old style to the new style for the first time an adapter is required. The Kit is available for the first time change only. After the original change or on new style units the valve only can be changed.

DISCONTINUED PART:

1021300 Valve-on off
This part will be available until existing stock is depleted. Then it will be obsolete and no longer available.

NEW PARTS:

1176099 Valve-on off
When replacing 1021300 for the first time use:
4440394 Valve Replacement Kit
This Kit consists of: (all parts are also available individually)
1176099 Valve-on off 1176285 Valve Adapters (2 pieces)

NOTE: The 1176099 is Mandatory Distributor Stock The 4440394 is Recommended Distributor Stock Both old & new valves use the same valve knob

1100 Old Honeycutt Rd. • Fuquay-Varina, NC 27526 • (919) 552-9161 • (800) 348-2558 • Fax (919) 552-9798
Parts Service Hotline (800) 54 RANGE (800-547-2643)

List Prices- effective 1-15-94

1176099- $19.80; 440394- $27.00; 1176285- $3.60 Other parts are in the current price list.

TE/dy

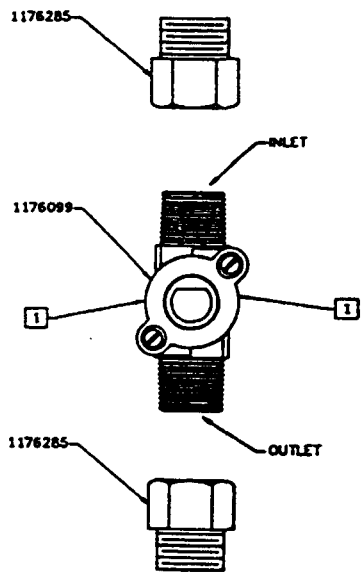

INSTRUCTIONS FOR SECTIONAL ON/OFF VALVE REPLACEMENT

USE: SECTIONAL OVEN'S AND SECTIONAL GRIDDLES WITH THERMOSTATIC GRIDDLE CONTROLS. ON/OFF VALVE REPLACEMENT ONLY.

ON ALL SECTIONAL EQUIPMENT HAVING OVENS AND SECTIONAL UNITS HAVING GRIDDLES WITH THERMOSTATIC GRIDDLE CONTROLS, A VALVE ADAPTOR IS REQUIRED ON THE INLET OF THE NEW VALVE. THE INLET CAN BE IDENTIFIED BY THE CONE SHAPED COUNTERBORE ON TOP SIDE OF VALVE, AND ALSO BY THE D SHAPED STEM. THE FLAT SIDE OF D STEM IS FACING TOP SIDE OF VALVE WHEN VALVE IS IN OFF POSITION.

[1] CAUTION: DO NOT PUT EXTREME PRESSURE ON VALVE BODY AT POINTS INDICATED ON KIT DRAWING. THIS MAY CAUSE DAMAGE TO VALVE.

1. TURN OFF GAS SUPPLY TO UNIT AND REMOVE DEFECTIVE VALVE DO NOT DISCARD ANY FITTINGS FROM VALVE AT THIS TIME.
2. ATTACH VALVE ADAPTOR PT# 1176285 TO INLET OF ON-OFF VALVE. USE PIPE JOINT COMPOUND ON THREADS.
3. SOME ON-OFF VALVE ASSEMBLIES MAY REQUIRE THE USE OF A SECOND ADAPTOR 1176285 ON OUTLET SIDE OF VALVE TO INSURE PROPER ALIGNMENT FOR CONNECTIONS. INSPECT DEFECTIVE VALVE TO SEE IF A SECOND ADAPTOR SHOULD BE USED.
4. IF SECOND ADAPTOR IS REQUIRED INSTALL AS IN STEP 2 ON OUTLET END OF VALVE.
5. REMOVE ELBOW FITTING FROM DEFECTIVE VALVE AND INSTALL ON VALVE IN SAME POSITION AS IT WAS ON DEFECTIVE VALVE. CHECK FOR PROPER HEIGHT AND ANGLE TO BE SURE ALL CONNECTIONS CAN BE MADE.
6. INSTALL VALVE ASSEMBLY. (USE JOINT COMPOUND ON THREADS). ALIGN FITTINGS, RECONNECT TUBING, TURN ON GAS AND CHECK FOR GAS LEAKS.

CAD SIZE B DWG—
DO NOT HAND ALTER

REV	SYM	REVISION	DATE	BY	ECN	APP
		DRAWING RELEASED	1/31/94	DBC	94-30	

TOLERANCES (UNLESS OTHERWISE SPECIFIED)		
X.XXX	±	0.015
X.XX	±	0.030
X.X	±	0.060
FRACTIONS	±	1/8"
DEGREES	±	1°

southbend

DRAWN BY DBC	CHK	APP
DATE 1/31/94	SCALE FULL	
MAT'L N/A	GAGE N/A	
OVEN VALVE REPLACEMENT KIT INSTRUCTIONS	PART NO. 1176020	

4440394

southbend SERVICE B•U•L•L•E•T•I•N

TO: Southbend Parts & Service Distributors

FROM: Thomas S. Enyeart- CFSP Director Product Service

DATE: February 5, 1994 **BULLETIN #9418**

SUBJECT: **Valve Change- Sectional Center Fired Hot Top-Natural Gas Models 136,136-1, 136-0, 142, 142-1. 142-0 & all with Prefix CO**

Please insert this Bulletin behind the 1161610 Sectional Range Front Manifold Battery Type owners manual in the SR- Sectional Range section of your master Southbend Manual.

Effective March, 1994 Serial #94C and thereafter

Hot Top Valves are being changed. When changing from the old style to the new style for the first time an adapter and new knob are required. The Kit is available for the first time change only. After the original change or on new style units the valve only can be changed

DISCONTINUED PART:

1021997 Valve
This part is obsolete and no longer available. Some old literature lists this part as a #1021901 which was the same.

NEW PARTS:

1176016 Valve- Hi Low- Natural Gas
When replacing #1021997 for the first time use:
4440412 Valve- Replacement Kit- Natural Gas
This kit consists of: (all parts also available individually)
1176016 Valve-Hi Low- Natural Gas
1179083 Valve Adapter
1006422 Orifice Hood- Natural Gas
1166011 Valve Knob

NOTE: The 1176016 is Recommended Distributor Stock
The 4440412 Valve Kit is Recommended Distributor Stock.
The new valve can only be used for Natural Gas. For Propane Gas See Bulletin 9419- Part #1176016 & 4440411.

1100 Old Honeycutt Rd. - Fuquay-Varina, NC 27526 • (919) 552-9161 • (800) 348-2558 • Fax (919) 552-9798
Parts Service Hotline (800) 54 RANGE (800-547-2643)

The old Valve used a 1160532 Knob which is still available.

The 1176016 Valve has S16 stamped on the flat side of the Valve Barrel.

List Prices- effective 1 -15-94

1176016- $48.40; 4440412- $63.60; 1179083- $12.40

Other parts are in the current price list.

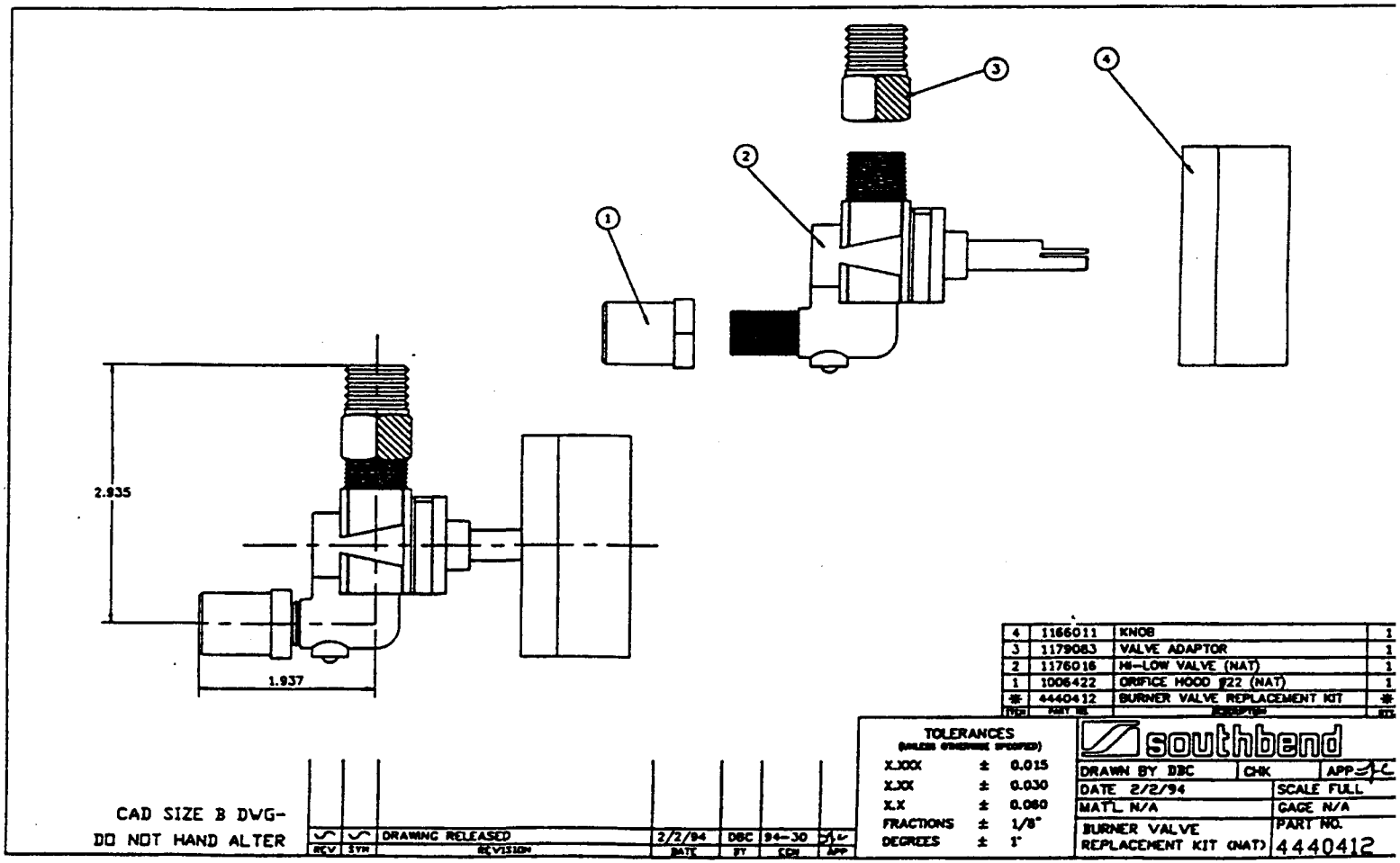

southbend SERVICE B•U•L•L•E•T•I•N

TO: Southbend Parts & Service Distributors

FROM: Thomas S. Enyeart- CFSP
Director Product Service

DATE: February 5, 1994 **BULLETIN #9419**

SUBJECT: **Valve Change- Sectional center Fired Hot Top- Propane Gas Models 136,136-1, 136-0,142, 142-1,142-0 & all with Prefix CO**

Please insert this Bulletin with the 1161610 Sectional Range Front Manifold Battery Type owners manual in the SR- Sectional Range section of your master Southbend Manual.

Effective March, 1994 Serial #94C and thereafter

Hot Top Valves are being changed. When changing from the old style to the new style for the first time an adapter and new knob are required. The Kit is available for the first time change only After the original change or on new style units the valve only can be changed

DISCONTINUED PART:

1021996 Valve

This part will be available until existing stock is depleted- approximately 18 months. Then it will be obsolete & no longer available. Some old literature lists this part as a #1021901 which was the same identical part.

NEW PARTS:

1176017 Valve- Hi Low- Propane Gas
When replacing #1021996 for the first time use:
4440411 Valve- Replacement Kit- Propane Gas
This kit consists of: (all parts also available individually)
1176017 Valve-Hi Low- Propane Gas
1179083 Valve Adapter
1006433 Orifice Hood- Propane Gas
1166011 Valve Knob

NOTE: The new Valve can only be used for Propane Gas For Natural Gas See Bulletin #9418- Part # 1176016 & 4440412.

1100 Old Honeycutt Rd. • Fuquay-Varina, NC 27526 • (919) 552-9161 • (800) 348-2558 • Fax (919) 552-9798

Parts Service Hotline (800) 54 RANGE (800-547-2643)

The old Valve used a 1160532 Knob which is still available.

The 1176017 Valve has S17 stamped on the flat side of the Valve Barrel.

List Prices- effective 1 -15-94

1176017- $48.40; 4440411 - $63.60; 1179083- $12.40: 1006433- $2.80.

Other parts are in the current price list.

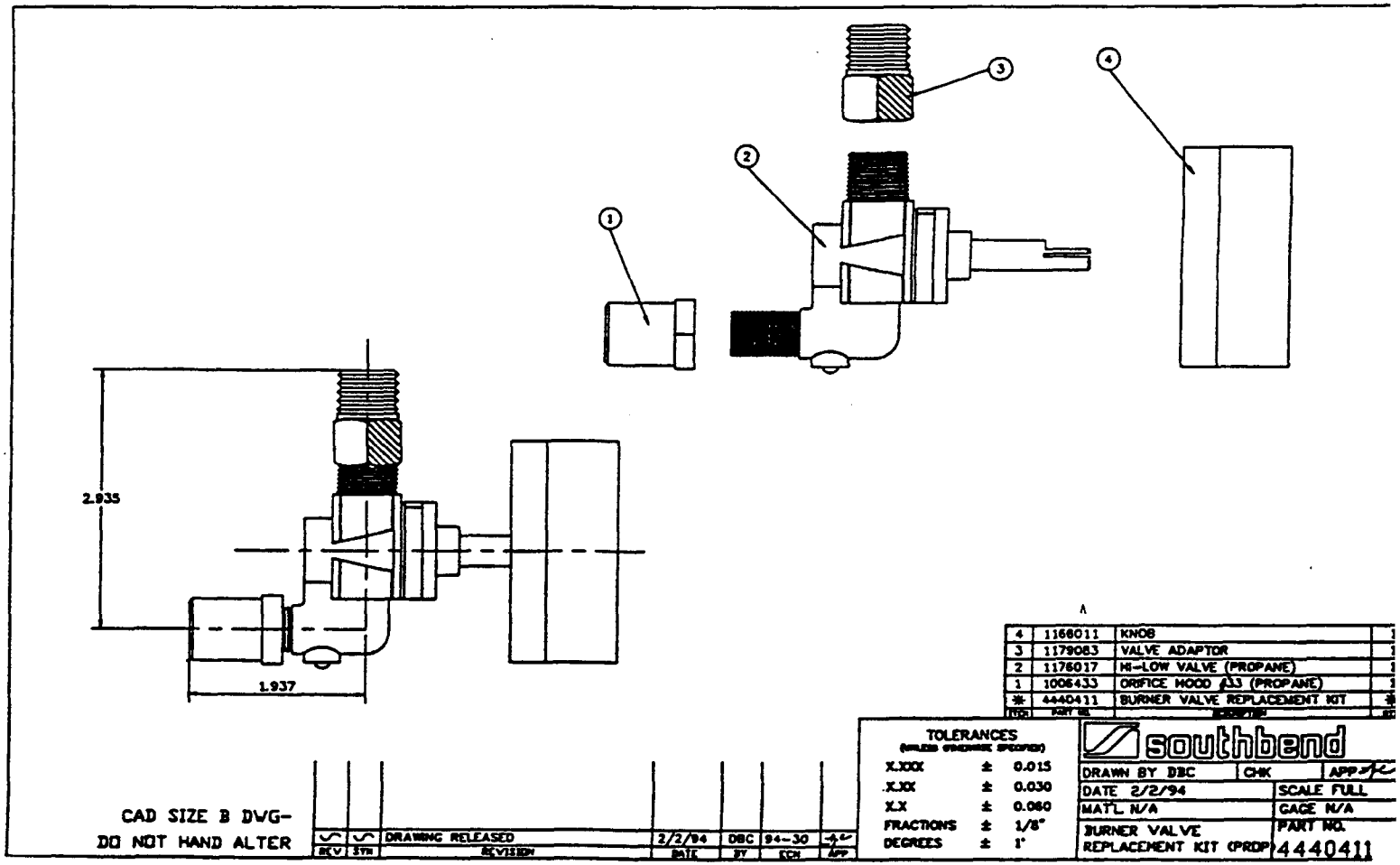

southbend SERVICE B•U•L•L•E•T•I•N

TO: Southbend Parts & Service Distributors

FROM: Thomas S. Enyeart- CFSP
Director Product Service

DATE: February 5, 1994 **BULLETIN #9417**

SUBJECT: **Valve Change- Sectional Open Burners- Suffix D only. Propane Gas.**

Models 1364 D, 164, 1365, 1366, & all other with Prefix CO, and suffix -1 or -0. Same in 42" Depth- i.e. 1424 D, 124, etc.

Please insert this Bulletin with the 1161610 Sectional Range Front Manifold Battery Type owners manual in the SR- Sectional Range section of your master Southbend Manual.

Effective August, 1993 Serial #93 H & J and thereafter

Open Top Burner Valves for all suffix D units have been changed. When changing from the old style to the new style for the first time a fitting is required. The Kit is available for the first time change only. After the original change or on new style units the valve only can be changed.

DISCONTINUED PART:

1168276 Valve

This part is obsolete and no longer available.

NEW PARTS:

1176005 Valve- Hi Low- Propane Gas
When replacing #1168276 for the first time use:
4440403 Valve- Replacement Kit- Propane Gas
This kit consists of: (all parts also available individually)
1176005 Valve-Hi Low- Propane Gas
1166010 Extension Nipple

NOTE: The new valve can only be used for Propane Gas
For Natural Gas See Bulletin 9416- Part #1176004 & 4440404.
Both old & new Valves use a 1166011 Valve Knob.
Old style ranges- No suffix, & suffix B&C used #1163891 & 1021697 Valves. Both will be available in the foreseeable future.

1100 Old Honeycutt Rd. • Fuquay-Varina, NC 27526 • (919) 552-9161 • (800) 348-2558 • Fax (919) 552-9798
Parts Service Hotline (800) 54 RANGE (800-547-2643)

The 1176005 has the Southbend logo & 05 stamped on the flat side of the valve stem.

List Prices- effective 1-15-94

1176005- $11.90; 4440403- $17.90. Other parts are in the current price list

ITEM	PART NO.	DESCRIPTION	QTY.
2	1166010	EXTENSION NIPPLE	1
1	1176005	HI-LOW VALVE (PROPANE)	1
*	4440403	BURNER VALVE REPLACEMENT KIT	*

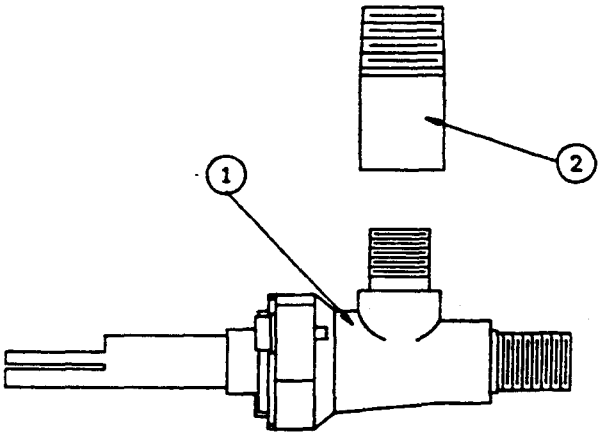

ACAD SIZE A DWG-
DO NOT HAND ALTER

TOLERANCES
(UNLESS OTHERWISE SPECIFIED)

X.XXX	±	0.015	FRACTIONS	±	1/8"
X.XX	±	0.030	DEGREES	±	1°
X.X	±	0.060			

southbend

DRAWN BY DBC	CHK	APP
DATE 2/2/94	SCALE FULL	
MAT'L N/A	GAGE N/A	
BURNER VALVE REPLACEMENT KIT (PROP)	PART NO. 4440403	

REV	SYM	REVISION	DATE	BY	ECN
		DRAWING RELEASED	2/2/94	DBC	94-30

southbend SERVICE B•U•L•L•E•T•I•N

TO: Southbend Parts & Service Distributors

FROM: Thomas S. Enyeart- CFSP
Director Product Service

DATE: February 5, 1994 **BULLETIN #9416**

SUBJECT: **Valve Change- Sectional Open Burners- Suffix D only Natural Gas.**

Models 1364 D, 164,1365, 1366, & all with Prefix CO, and suffix -1 or -0. Same in 42" Depth- i.e. 1424 D, 124, etc.

Please insert this Bulletin with the 1161610 Sectional Range Front Manifold Battery Type owners manual in the SR- Sectional Range section of your master Southbend Manual.

Effective August, 1993 Serial #93 H & J and thereafter
(unfortunately, this was phased in over a 2 to 3 month period)

Open Top Burner Valves for all suffix D units have been changed. When changing from the old style to the new style for the first time a fitting is required. The Kit is available for the first time change only. After the original change or on new style units the valve only can be changed.

DISCONTINUED PART:

1168276 Valve
This part is obsolete and no longer available.

NEW PARTS:

1176004 Valve- Hi Low- Natural Gas
When replacing #1168276 for the first time use:
4440404 Valve Replacement Kit-Natural Gas
This kit consists of: (all parts also available individually)
1176004 Valve-Hi Low- Natural Gas
1166010 Extension Nipple

NOTE: The 1176004 Valve is Mandatory Distributor Stock
The 4440404 Valve Kit is Recommended Distributor Stock.
The new valve can only be used for Natural Gas.
For Propane Gas See Bulletin 9417- Part #1176005 & 4440403.
Both old & new Valves use a 1166011 Valve Knob.

1100 Old Honeycutt Rd. • Fuquay-Varina, NC 27526 • (919) 552-9161 • (800) 348-2558 • Fax (919) 552-9798
Parts Service Hotline (800) 54 RANGE (800-547-2643)

Old style ranges- No suffix, & suffix B&C used #1163891 & 1021697 Valves. Both will be available in the foreseeable future. The 1176004 Valve has the Southbend logo & 04 stamped on the flat side of the valve stem.

List Prices- effective 1-15-94

1176004- $11.90; 4440404- $17.90. Other parts are in the current price list

ITEM	PART NO.	DESCRIPTION	QTY.
2	1166010	EXTENSION NIPPLE	1
1	1176004	HI-LOW VALVE (NAT)	1
*	4440404	BURNER VALVE REPLACEMENT KIT	*

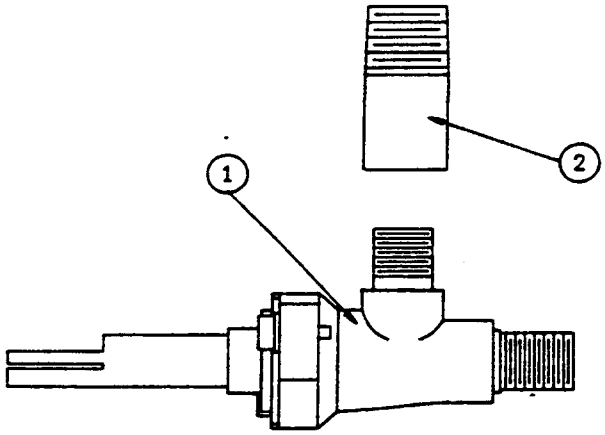

ACAD SIZE A DWG-
DO NOT HAND ALTER

TOLERANCES
(UNLESS OTHERWISE SPECIFIED)

X.XXX	±	0.015	FRACTIONS	±	1/8"
X.XX	±	0.030	DEGREES	±	1°
X.X	±	0.060			

southbend

DRAWN BY DBC	CHK	APP
DATE 2/2/94	SCALE FULL	
MAT'L. N/A	GAGE N/A	
BURNER VALVE REPLACEMENT KIT (NAT)	PART NO. 4440404	

REV	SYM	REVISION	DATE	BY	ECN
		DRAWING RELEASED	2/2/94	DBC	94-30

southbend SERVICE B•U•L•L•E•T•I•N

TO: Southbend Parts & Service Distributors

FROM: Thomas S. Enyeart- CFSP
Director Product Service

DATE: February 5, 1994 **BULLETIN #9415**

SUBJECT: **Valve Change- Sectional Uniform Top and Standard Control Griddles- Propane Gas.**
Models 1361, 1362, 1365, 1366, 1367, 161 & all with Prefix CO, and suffix -1 or -0. Same in 42" Depth- i.e. 1421,1422, etc.

Please insert this Bulletin with the 1161610 Sectional Range Front Manifold Battery Type owners manual in the SR- Sectional Range section of your master Southbend Manual.

Effective December, 1993 Serial #93C and thereafter

Uniform Top and Standard Control Griddle Valves have been changed. When changing from the old style to the new style for the first time fittings and a new knob are required. The Kit is available for the first time change only. After the original change or on new style units the valve only can be changed.

DISCONTINUED PART:

1021998 Valve- Propane Gas
This part is obsolete and no longer available.

NEW PARTS:

1176019 Valve Propane Gas
When replacing #1021998 for the first time use:
4440396 Valve- Replacement Kit-Propane Gas
This kit consists of: (all parts also available individually)
1176019 Valve- Propane Gas
1176285 Valve Adapter
1179080 Valve Extension
1006446 Orifice Hood- Propane Gas
1166011 Valve Knob

NOTE: The new valve can only be used for Propane Gas. For Natural Gas See Bulletin 9414- Part #1176018 & 4440395

1100 Old Honeycutt Rd. • Fuquay-Varina, NC 27526 • (919) 552-9161 • (800) 348-2558 • Fax (919) 552-9798
Parts Service Hotline (800) 54 RANGE (800-547-2643)

The old valve used a 1160532 Knob which is still available.

The 1176019 Valve has S19 stamped on the flat side of the Valve barrel.

List Prices- effective 1-15-94

1176019-$48.50; 4440396-$71.20; 1176285-$3.60: 1179080-$9.10; 1006446- $2.80. Other parts are in the current price list.

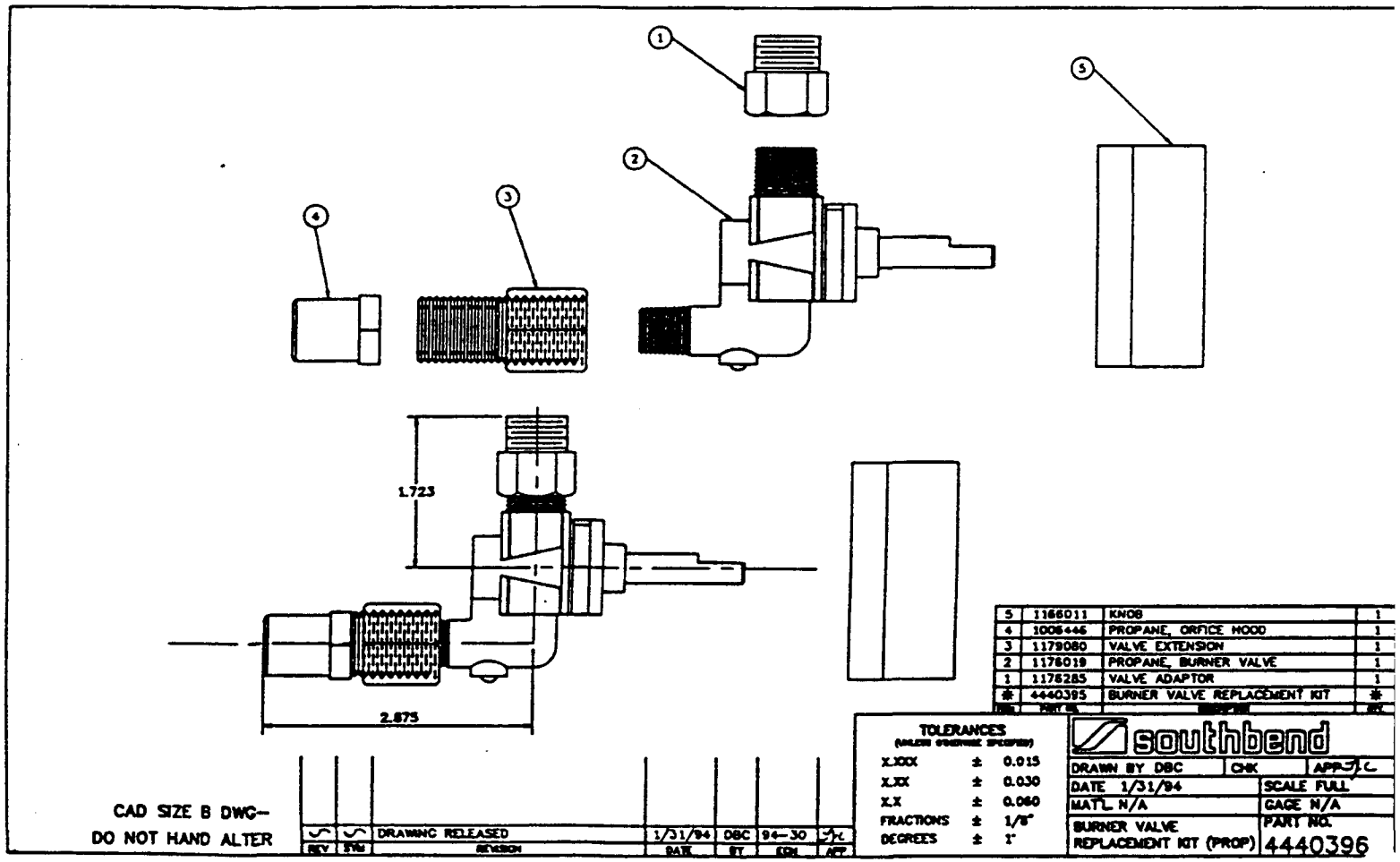

southbend SERVICE B•U•L•L•E•T•I•N

TO: Southbend Parts & Service Distributors

FROM: Thomas S. Enyeart- CFSP
Director Product Service

DATE: February 5, 1994 **BULLETIN #9414**

SUBJECT: **Valve Change- Sectional Uniform Top and Standard Control Griddles- Natural Gas.**
Models 1361,1362, 1365,1366,1367,161 & all with Prefix CO, and suffix -1 or -0. Same in 42" Depth- i.e. 1421, 1422, etc.

Please insert this Bulletin with the 1161610 Sectional Range Front Manifold Battery Type owners manual in the SR- Sectional Range section of your master Southbend Manual.

Effective December, 1993 Serial #93L and thereafter

Uniform Top and Standard Control Griddle Valves have been changed. When changing from the old style to the new style for the first time fittings and a new knob are required. The Kit is available for the first time change only. After the original change or on new style units the valve only can be changed.

DISCONTINUED PART:
1021999 Valve- Natural Gas
This part is obsolete and no longer available.

NEW PARTS:
1176018 Valve Natural Gas
When replacing #1021999 for the first time use:
4440395 Valve- Replacement Kit-Natural Gas
This kit consists of: (all parts also available individually)
1176018 Valve- Natural Gas
1176285 Valve Adapter
1179080 Valve Extension
1006432 Orifice Hood- Natural Gas
1166011 Valve Knob
NOTE: The 1176018 Valve is Mandatory Distributor Stock.

1100 Old Honeycutt Rd. • Fuquay-Varina, NC 27526 • (919) 552-9161 • (800) 348-2558 • Fax (919) 552-9798
Parts Service Hotline (800) 54 RANGE (800-547-2643)

The 4440395 Valve is Recommended Distributor Stock.
The new valve can only be used for Natural Gas.
For Propane Gas See Bulletin 9415- Part #1176019 & 4440396
The old valve used a 1160532 Knob which is still available.
The 1176018 Valve has 518 stamped on the flat side of the valve barrel.

List Prices- effective 1-15-94

1176018- $48.50; 4440395- $71.20; 1176285- $3.60; 1179080-$9.10;
1006432- $2.80. Other parts are in the current price list.

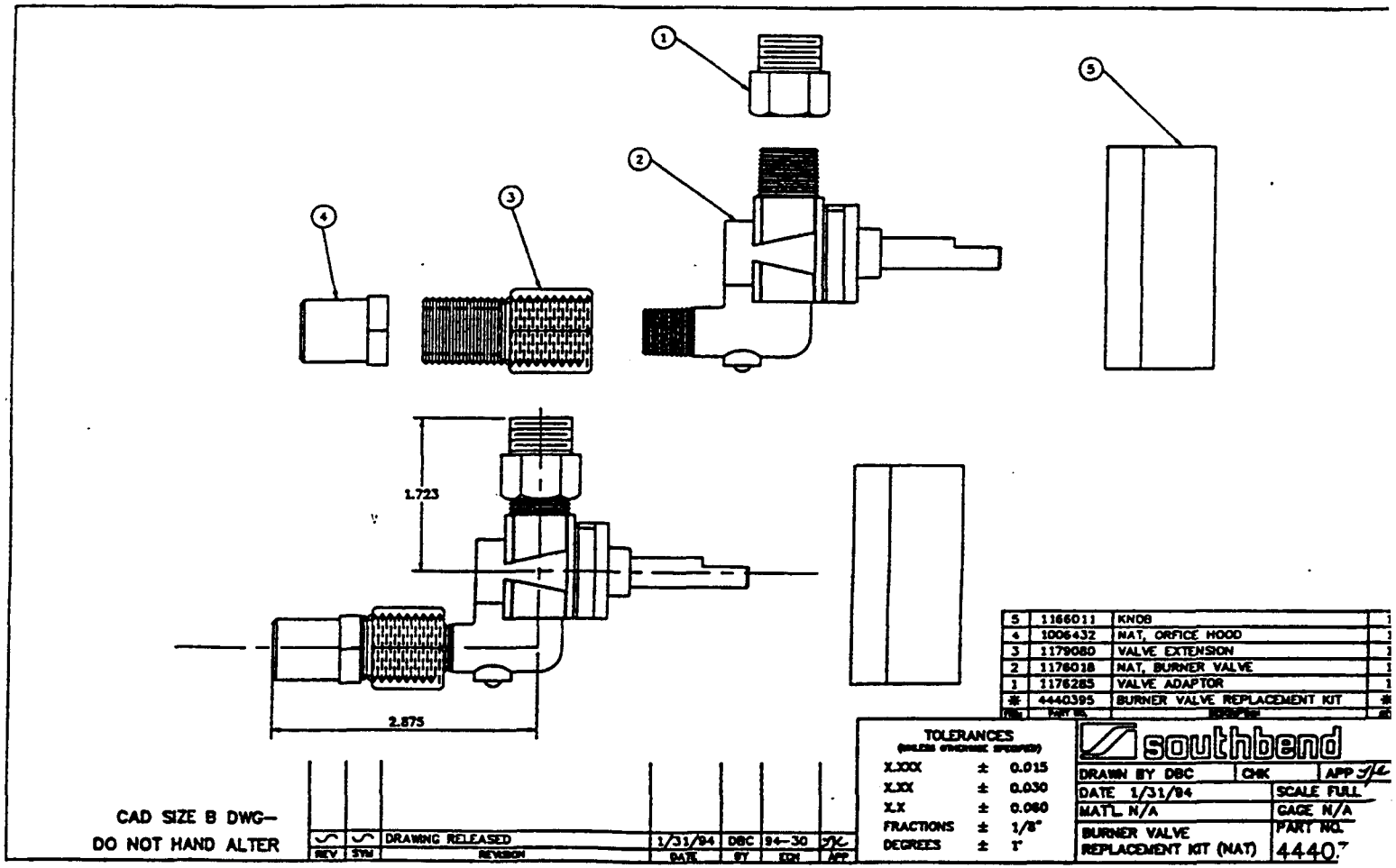

southbend SERVICE B•U•L•L•E•T•I•N

TO: Southbend Parts & Service Distributors

FROM: Thomas S. Enyeart- CFSP
Director Product Service

DATE: February 5, 1994 **BULLETIN #9411**

SUBJECT: **Valve Change- Sectional Rear Hot Top Plates- Propane Gas.**
Models HT 1363, HT 1363-1, HT 1363-0, HT 1423

Please insert this Bulletin with the #1161610 Sectional Range Front Manifold Battery Type owners manual in the SR- Sectional Range section of your master Southbend Manual.

Effective July, 1993 Serial #93G and thereafter

Hot Top Burner Valves have been changed. When changing from the old style to the new style for the first time fittings are required The Kit is available for the first time change only. After the original change or on new style units the valve only can be changed.

DISCONTINUED PART:
1076798 Valve
This part is obsolete and no longer available

NEW PARTS:
1176003 Valve -Hi Low- Propane Gas
When replacing #1076798 for the first time only use:
4440359 Valve- Replacement Kit-Propane Gas
This kit consists of: (all parts also available individually)
1176003 Valve-Hi Low- Propane Gas
1174944 Valve Extension
1166010 Valve Extension nipple
1057200 Orifice Fitting
1008757 Orifice Hood- Propane Gas
1166011 Valve Knob

1100 Old Honeycutt Rd. • Fuquay-Varina, NC 27526 • (919) 552-9161 • (800) 348-2558 • Fax (919) 552-9798
Parts Service Hotline (800) 54 RANGE (800-547-2643)

NOTE: The new valve can only be used for Propane Gas.

For Natural Gas see bulletin #9410, Part numbers 1176002 & 4440358.

The old valve 1076798 used a #1160532 Knob which is still available.

This valve is to be used under rear hot top plates only. It is not for open burner use.

For other valves for these models see Bulletins #9408, 9409, 9410.

The 1176003 Valve has S03 stamped on the flat side of the Valve barrel.

List Prices- effective 1 -15-94

1176003- $11.90; 4440359- $37.20; 1174944- $7.70. Other parts are in the current price list.

TE/dy

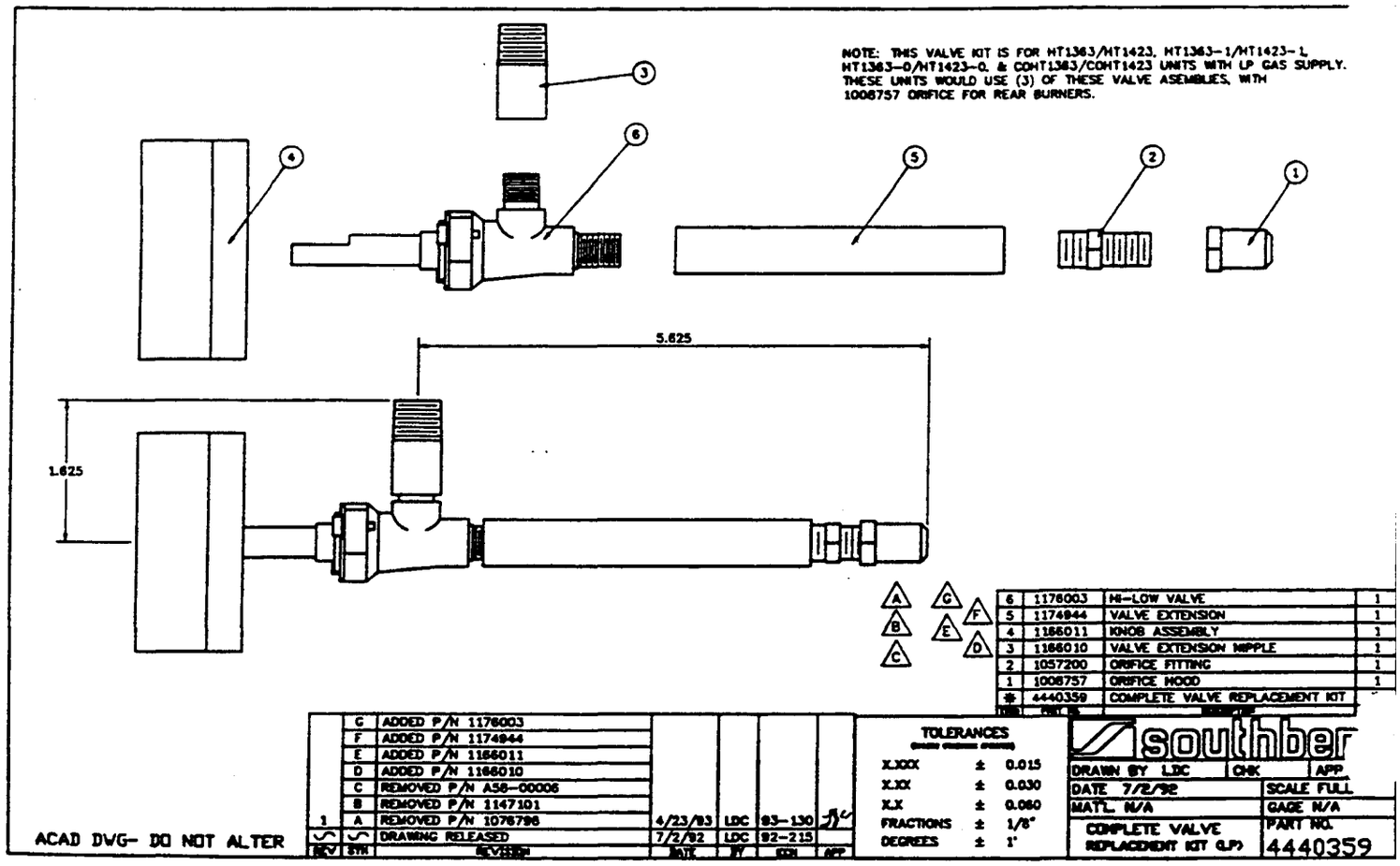

southbend SERVICE B•U•L•L•E•T•I•N

TO: Southbend Parts & Service Distributors

FROM: Thomas S. Enyeart- CFSP
Director Product Service

DATE: February 3, 1994 **BULLETIN #9410**

SUBJECT: **Valve Change- Sectional Rear Hot Top Plates- Natural Gas.**
Models HT 1363, HT 1363-1. HT 1363-0, HT 1423

Please insert this Bulletin behind the #1161610 Sectional Range Front Manifold Battery Type owners manual in the SR- Sectional Range section of your master Southbend Manual.

Effective July, 1993 Serial #93G and thereafter

Hot Top Burner Valves have been changed. When changing from the old style to the new style for the first time fittings are required. The Kit is available for the first time change only. After the original change or on new style units the valve only can be changed.

DISCONTINUED PART:
1076798 Valve
This part is obsolete and no longer available

NEW PARTS:
1176002 Valve -Hi Low- Natural Gas
When replacing #1076798 for the first time only use:
4440358 Valve- Replacement Kit-Propane Gas
This kit consists of: (all parts also available individually)
1176002 Valve-Hi Low- Natural Gas
1174944 Valve Extension
1166010 Valve Extension nipple
1057200 Orifice Fitting
1008757 Orifice Hood- Propane Gas
1166011 Valve Knob

1100 Old Honeycutt Rd. • Fuquay-Varina, NC 27526 • (919) 552-9161 • (800) 348-2558 • Fax (919) 552-9798
Parts Service Hotline (800) 54 RANGE (800-547-2643)

NOTE: The new valve can only be used for Natural Gas.

For Natural Gas see bulletin #9411, Part numbers 1176003 & 4440359.

The old valve 1076798 used a #1160532 Knob which is still available.

This valve is to be used under rear hot top plates only. It is not for open

For other valves for these models see Bulletins #9408, 9409, 9410.

The 1176002 Valve has S02 stamped on the flat side of the Valve barrel.

List Prices- effective 1-15-94

1176003- $11.90; 4440358- $37.20; 1174944- $7.70. Other parts are in the current price list.

TE/dy

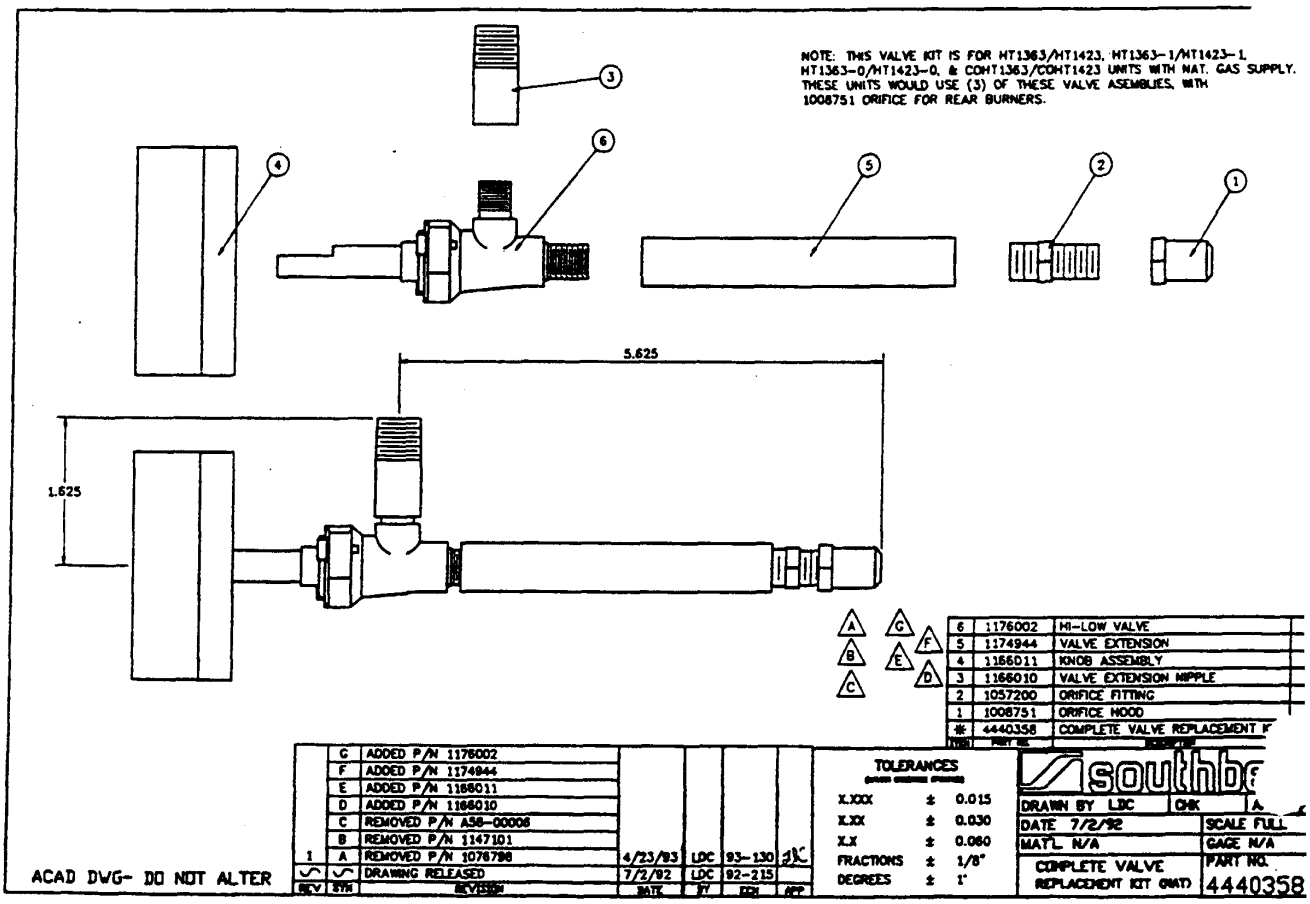

southbend SERVICE B•U•L•L•E•T•I•N

TO: Southbend Parts & Service Distributors

FROM: Thomas S. Enyeart-CFSP
Director Product Service

DATE: February 3, 1994 **BULLETIN #9409**

SUBJECT: **Valve Change-Sectional Open Top Burners- Propane Gas**
Models 1363, 1363-1, 1363-0, 163-1, 1423

Please insert this bulletin with the #1161610 Sectional Range Front Manifold Battery Type Manual in the SR-SECTIONAL RANGE Section of your master Southbend manual.

Effective July, 1993- Serial #93072929 & thereafter

Top Burner Valves have been changed. When changing from the old style to the new style for the first time fittings are required The Kit is available for this first time change only. After the original change or on new style units the valve only can be changed.

DISCONTINUED PART:
1076798 Valve
This part is obsolete and no longer available.

NEW PARTS:
1176003 Valve-Hi Low-Propane Gas
When replacing #1076798 for the first time only use
4440344 Valve Replacement Kit-Propane Gas
This Kit consists of: (all parts also available individually)
1176003 Valve-Hi Low-Propane Gas
1166010 Valve Extension Nipple
1057200 Orifice Fitting
1008756 Orifice Hood-Propane Gas
1166011 Valve Knob

Note: The New Valve can only be used for Propane Gas
For Natural Gas See Bulletin 9408, Part numbers 1176002 & 4440343.

The Old Valve 1076798 used a 1160532 Knob which is still available.

1100 Old Honeycutt Rd. • Fuquay-Varina, NC 27526 • (919) 552-9161 • (800) 348-2558 • Fax (919) 552-9798
Parts Service Hotline (800) 54 RANGE (800-547-2643)

For other Valves for these models see Bulletins 9408, 9410, 9411.

The 1176003 Valve has S03 stamped on the flat side of the valve barrel.

List Prices- effective 1-15-94

1176003- $11.90; 4440344- $37.20; 1174944- $7.70. Other parts are in the current price list.

TE/dy

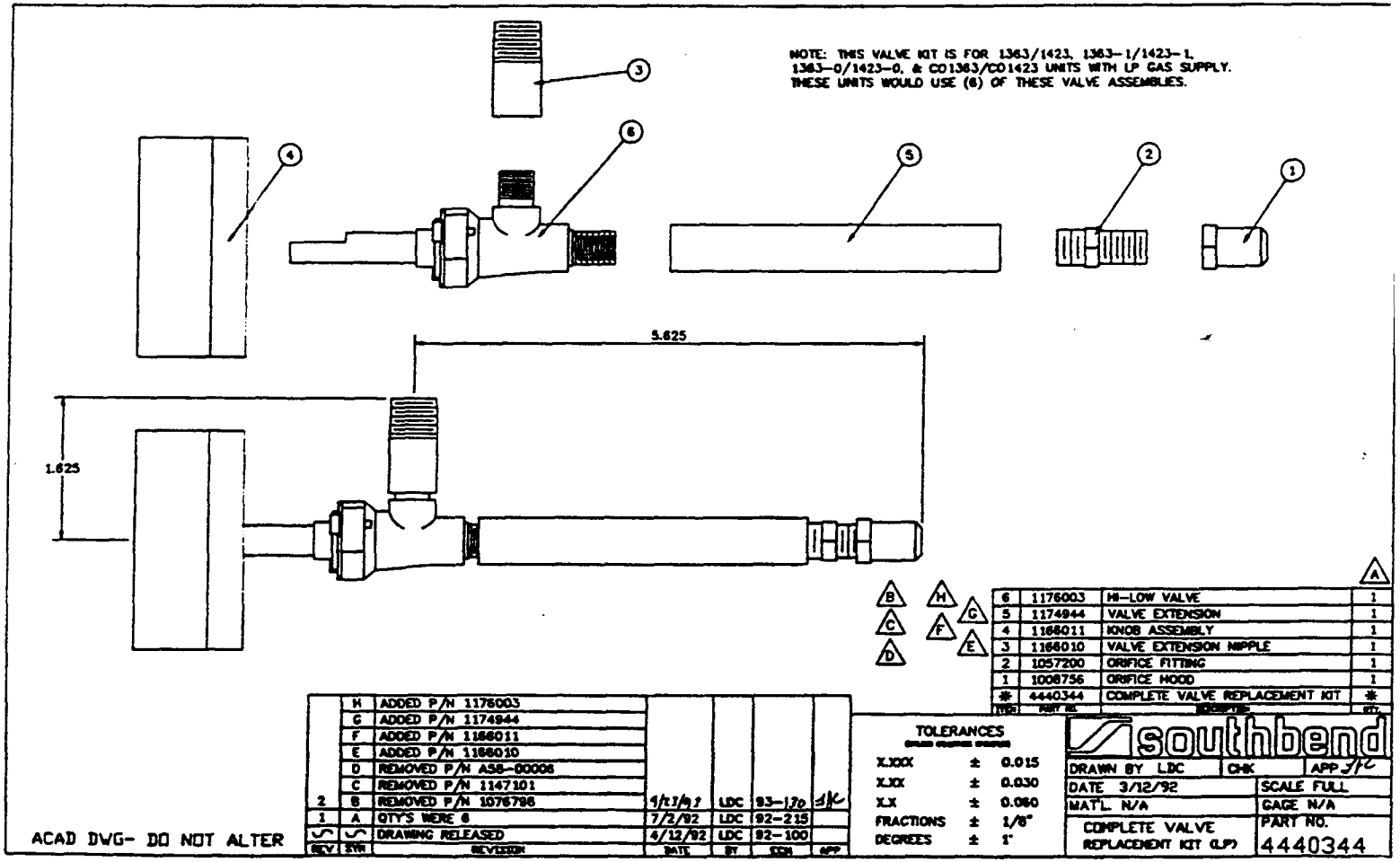

southbend SERVICE B•U•L•L•E•T•I•N

TO: Southbend Parts & Service Distributors

FROM: Thomas S. Enyeart-CFSP
Director Product Service

DATE: February 3, 1994 **BULLETIN #9408**

SUBJECT: **Valve Change- Sectional Open Top Burners- Natural Gas**
Models 1363, 1363-1, 1363-0, 163-1, 1423

Please insert this bulletin with the #1161610 Sectional Range- Front Manifold Battery Type Manual in the SR-SECTIONAL RANGE Sections of your master Southbend manual.

Effective July, 1993- Serial #93G72929 & thereafter.

Top Burner Valves have been changed. When changing from the old style to the new style for the first time fittings are required The Kit is available for this first time change only. After the original change or on new style units the valve only can be changed.

DISCONTINUED PART:
#1076798 Valve
This part is obsolete and no longer available.

NEW PARTS:
1176002 Valve-Hi Low-Natural Gas
When replacing #1076798 for the first time only use
4440343 Valve Replacement Kit- Natural Gas
This Kit consists of: (all parts also available individually)
1176002 Valve-Hi Low-Natural Gas
1174944 Valve Extension
1166010 Valve Extension Nipple
1057200 Orifice Fitting
1008750 Orifice Hood- Natural Gas
1166011 Valve Knob

Note: The new valve can be used for Natural Gas only.
For Propane Gas see Bulletin 9409, Part numbers 1176003 or 4440344.

1100 Old Honeycutt Rd. • Fuquay-Varina, NC 27526 • (919) 552-9161 • (800) 348-2558 • Fax (919) 552-9798
Parts Service Hotline (800) 54 RANGE (800-547-2643)

The old Valve 1076798 used a 1160532 Knob which is still available.

For other Valves for these models see Bulletins #9409, 9410, 9411

The #4440343 Valve Kit is Recommended Stock

The #1176002 Valve is Mandatory Distributor Stock

The 1176002 Valve has S02 stamped on the flat side of the valve barrel.

List Prices- effective 1-15-94

1176002-$11.90; 4440343-$37-20: 1174944- $7.70; other parts are in the current Parts Price List

TE/dy